RHODE ISLAND
SOIL EROSION AND SEDIMENT CONTROL HANDBOOK

Rhode Island State Conservation Committee

With the Support from

Rhode Island Department of Environmental Management

Rhode Island Coastal Resources Management Council

Rhode Island Department of Transportation

The University of Rhode Island

Issued 1989 (Revised 2014)

Janet Coit, Director
Rhode Island Department of Environmental Management (RI DEM)

Maria Mack, Chair
Rhode Island State Conservation Committee

Edited by Jennifer Steele (consultant), Beverly Migliore, Brian Lafaille and Harry Oakley (RI DEM)

Project Coordination and Team Leader
J. Eric Scherer
Southern Rhode Island Conservation District

Harry Oakley III, Book Layout and Design
Rhode Island Department of Environmental Management (RI DEM)

Handbook production by
Southern Rhode Island Conservation District

Additional copies may be purchased from the Sothern Rhode Island Conservation District website: http://sricd.org or by contacting them at
PO Box 1636 Kingston, RI 02881

Tel: 401-500-0422

Email: SRICD.info@gmail.com

Issued 1988
Revised 1989
Revised August 13, 2014

Funded in part by the Rhode Island Resource Conservation and Development Council through a grant from the USDA, Natural Resources Conservation Service.

Executive Summary

The *Rhode Island Soil Erosion and Sediment Control Handbook*, last revised in 1989, is an important guidance tool for local, state and federal agencies, the general public and the private sector in the application of appropriate soil erosion and sediment control measures in Rhode Island. Accessibility to this 1989 Handbook, either electronic or hard copy was unavailable or limited to a copy found on-line as a portable document format (.pdf). Consequently, an updated, more accessible version of the Handbook was needed for both public and private use.

In 2012 a technical review process was established to update the Handbook. To aid in this update a Technical Review Committee (TRC), represented by both public agencies and the private sector, was formed. The goal of this technical review process was to end up with an updated, revised version of the Handbook that:

- Meets the needs of RI's practitioners, including local, state and federal agencies, developers, homeowners and the erosion control industry;
- Contains the most up-to-date technical information on soil erosion and sedimentation control measures;
- Contains up-to-date information on the regulatory and implementation processes relating to erosion control and how this Handbook is to be used within this regulatory environment;
- Is consistent with the *2010 Rhode Island Storm water Design and Installation Standards Manual*;
- Is easy to use and understand; and
- Is internally consistent in terms of level of detail, utility of illustrations, and applicability to Rhode Island.

The 2012 update to the Handbook was undertaken through an agreement between the RI Resource Conservation and Development Council (Council) and the RI State Conservation Committee (SCC). Funding for this update was provided to the Council through a cooperative agreement between the Council and the USDA - Natural Resources Conservation Service (NRCS). This update is a result of countless hours of dedicated staff time by the TRC from RI Department of Environmental Management (RIDEM), RI Department of Transportation (RIDOT), RI Coastal Resources Management Council (RICRMC), US Department of Agriculture (USDA), Natural Resource Conservation Service (NRCS) and a number of private companies and firms so that the update would be a current, state-of-the-technology document.

During the review process, the TRC drew heavily from other existing applicable state and federal documents, particularly:

- *2002 Connecticut Guidelines for Soil Erosion and Sediment Control;*
- US Environmental Protection Agency (EPA) Erosion Control Best Management Measures;
- *2010 Rhode Island Storm water Design and Installation Standards Manual;* and
- *2005 New York Standards and Specifications for Erosion and Sedimentation.*

Other manuals and handbooks were identified and utilized as appropriate to ensure this update was using the most current information on selected management measures. This Handbook

update also went through a format change to make its use easier and more accessible to the end users. A measure selection guide has been added and more details on planning for sites were developed so that this guidance document could be used to achieve compliance with state and local regulatory programs. And, this update added several new sections, particularly **Section Two: Site Planning and Management, Section Three: Pollution Prevention and Good Housekeeping** and Bioengineering measures in Section Four. Finally, more current technical information on some of the more commonly used measures, such as hay bales as sediment barriers, now reflects the current limitations in the use of this material as a soil erosion and sediment control measure. The reader will note that this revised Handbook does not contain coastal-related erosion control measures or dune restoration and planting guidelines, as the RICRMC has specific requirements within its coastal program. Property owners and contractors that propose shoreline erosion control projects or dune restoration projects should contact the RICRMC for specific regulatory requirements and guidance.

Users of this Handbook should be aware that although this document is a guidance document, it is referenced within both local ordinances and state regulatory programs that require its use. Users should ensure that they use the most current version of the Handbook and ensure that references made to this handbook are accepted by all pertinent regulatory programs.

The Handbook will be maintained and updated by the Rhode Island State Conservation Committee and as new technology and information becomes available, updates to the Handbook will be issued through a public notification process. This notification process will be accomplished through electronic media, such as a list serve. This will allow for easy access to any updates as they become available through the State Conservation Committee.

Acknowledgments

The revised *2013 Rhode Island Soil Erosion and Sediment Control Handbook* was prepared by the Rhode Island State Conservation Committee (SCC) in cooperation with the Rhode Island Department of Environmental Management (RI DEM), the Rhode Island Department of Transportation RI DOT) and the Rhode Island Coastal Resource Management Council (CRMC). Support for this revision was provided to the SCC through the Rhode Island Resource Conservation and Development Council under a cooperative agreement through the USDA Natural Resources Conservation Service.

This Handbook revision was accomplished through the dedicated efforts of the Technical Review Committee with leadership by J. Eric Scherer, Southern Rhode Island Conservation District, Brian Lafaille, RI DEM, Allison Hamel, RI DOT and James Boyd, RI CRMC. A number of resource and reference documents were utilized in this revision, including, but not limited to the following sources; the 2002 Connecticut Guidelines on Erosion and Sediment Control and the 2005 New York State Standards and Specifications for Erosion and Sediment Control.

Special thanks extended to Jennifer Steel, for editing and managing the review process and the formatting of this revision. Additional thanks goes to Beverly Migliore, RI DEM for final edits and management of the Handbook for access by users.

The Technical Review Committee members' contribution of time and expertise is revision the state's Handbook is greatly appreciated. The membership of the committee consisted of the following individuals:

J, Eric Scherer, SRICD
Brian Lafaille, RI DEM
Harry Oakley III, RI DEM
Beverly Migliore, RIDEM
Dean Audet, Fuss and O'Neil
Eric Beck, RI DEM
Jim Boyd, RI CRMC
Chuck Eaton, CME Associates, Inc.
Allison Hamel, RI DOT
Pete Hanrahan, E. J. Prescott
Lorraine Joubert, URI
Jason Ringler, Louis Berger
Sam Whiten, EA Associates
Nick Pisani, RI DEM

To all who provided photographs and technical drawings:
Graphics are individually cited, or are from the 2002 Connecticut Erosion and Sedimentation Guidelines or the 1989 Rhode Island Soil Erosion and Sediment Control Handbook.

Please Note:
Mention of trade names or proprietary commercial products, if any, does not constitute endorsement. Review by State of Rhode Island employees does not necessarily reflect the views and policies of state agencies, nor does the mention of trade names, commercial products or professional consultants constitute endorsement or recommendation for use or services by the State of Rhode Island.

Table of Contents

Executive Summary……I
Acknowledgements……III

SECTION ONE: INTRODUCTION
Part A. About this Handbook.....(1 - 5)
Part B. Erosion and Sediment Pollution .....(1 - 9)

SECTION TWO: SITE PLANNING AND MANAGEMENT
Part C. Control Measures: Selecting the Right Ones .....(1 - 5)
Part D. Soil Erosion and Sediment Control Plans.....(1 - 16)
Part E. Construction Phasing and Sequencing .....(1 - 4)

SECTION THREE: POLLUTION PREVENTION AND GOOD HOUSEKEEPING
Minimizing Disturbed Area: Preserving Soils & Vegetation .....(1 - 6)
Protecting Vegetated Buffers .....(1 - 8)
Limit of Work and Site Access Control .....(1 - 2)
Tree Protection .....(1 - 5)
Dust Control.....(1 - 2)
Spill Prevention and Control Plans.....(1 - 3)
Stockpile and Staging Area Management .....(1 - 3)
Street Sweeping .....(1 - 2)
Waste Management.....(1 - 3)
Concrete Washout .....(1 - 6)
Vehicle Fueling, Maintenance and Washing .....(1 - 3)

SECTION FOUR: EROSION CONTROL MEASURES
Mulching .....(1 - 10)
Soil Preparation and Topsoiling .....(1 - 11)
Seeding for Temporary Vegetative Cover .....(1 - 5)
Seeding for Permanent Vegetative Cover .....(1 - 11)
Sodding .....(1 - 5)
Landscape Planting .....(1 - 12)
Land Grading.....(1 - 5)
Retaining Walls.....(1 - 4)
Slope Protection .....(1 - 10)
Surface Roughening .....(1 - 3)
Branch Packing.....(1 - 2)
Brush Layering .....(1 - 3)
Brush Mattresses.....(1 - 2)
Fascines .....(1 - 3)
Fiber Rolls for Bio-Engineering .....(1 - 2)
Live Crib Walls.....(1 - 3)
Live Staking .....(1 - 3)
Tree Revetments .....(1 - 2)

SECTION FIVE: RUNOFF CONTROL MEASURES

Check Dams ..... (1 - 9)
Water Bars ..... (1 - 3)
Diversions ..... (1 - 4)
Perimeter Dikes ..... (1 - 3)
Lined Waterways ..... (1 - 8)
Vegetated Waterways ..... (1 - 4)
Temporary Lined Channel ..... (1 - 3)
Pipe Slope Drains ..... (1 - 3)
Grade Stabilization Structures ..... (1 - 3)
Outlet Protection ..... (1 - 11)

SECTION SIX: SEDIMENT CONTROL MEASURES

Inlet Protection ..... (1 - 8)
Construction Entrances ..... (1 - 4)
Temporary Sediment Basins ..... (1 - 24)
Temporary Sediment Traps ..... (1 - 6)
Temporary Stream Crossings ..... (1 - 2)
Compost Filter Berms ..... (1 - 3)
Silt Fence ..... (1 - 6)
Straw Wattles, Compost Tubes and Fiber Rolls ..... (1 - 6)
Straw Bale ..... (1 - 4)
Turbidity Curtains ..... (1 - 2)
Containment Areas for Earth Materials ..... (1 - 3)
Portable Sediment Tanks and Bags ..... (1 - 4)
Pumping Settling Basins ..... (1 - 3)
Pump Intake Protection ..... (1 - 3)

SECTION SEVEN: APPENDICES

Appendix A. Glossary ..... (1 - 18)
Appendix B. Model Ordinance: Erosion and Sediment Control ..... (1 - 13)
Appendix C. Request Form to Submit Updates to the Handbook ..... (1 - 2)
Appendix D. Subscription for Updates and other Notices for the Handbook ..... (1)
Appendix E. Model SESC Plan Templates ..... (1 - 44)
Appendix F. Site Constraint Maps ..... (1 - 2)
Appendix G. Spill Prevention, Control and Countermeasures Plans (SPCCP) ..... (1)
Appendix H. Soil Classification Systems ..... (1 - 3)
Appendix I. Revised Universal Soil Loss Equation -- RUSLE2 ..... (1 - 3)
Appendix J. Chemical Treatment for Erosion and Sediment Control ..... (1 - 5)
Appendix K. Turf Reinforcement Mats ..... (1)
Appendix L. Riprap ..... (1 - 3)
Appendix M. Gabions ..... (1 - 4)
Appendix N. Erosion Control Blankets (ECBs) ..... (1 - 3)
Appendix O. Earth Fill ..... (1 - 2)

SECTION ONE
INTRODUCTION

(Photo Credit: USDA, NRCS)

Part A. About this Handbook ..... (1 - 5)
Part B. Erosion and Sediment Pollution ..... (1 - 9)

Part A. About this Handbook

Purpose of the Handbook

The 2013 revision of the Rhode Island Soil Erosion and Sediment Control Handbook (hereafter referred to as "the Handbook") is intended to assist property owners, developers, engineers, consultants, contractors, municipal staff and others in planning, designing and implementing effective Soil Erosion and Sediment Control Plans for the development and redevelopment of properties in Rhode Island. The Handbook contains effective erosion, runoff, and sediment control measures and is a useful reference for all projects that require soil erosion and sediment control planning, design and implementation. Contained within the Handbook are methods and techniques for minimizing erosion and sedimentation based on the best currently available technology representing the integration of (1) the most recent technical information, (2) the soil and water resource management expertise of the Soil Erosion and Sediment Control Committee members, and (3) the guidelines and preferred technologies of states with well-established soil erosion and sediment control programs.

Applicability of the Handbook

The Handbook has been designated as the foundation and minimum requirements for development of best management measures for construction activities for State permitting programs. These activities may include, but not limited to, water pollution control; coastal resource management; tidal wetlands; structures / dredging / fill in tidal, coastal and navigable waters; inland wetlands and watercourses; diversion of water; encroachments within stream channel encroachment lines; dam safety; and solid waste management.

Rhode Island Stormwater Design and Installation Standards Manual (RISDISM)

In December 2010, the Rhode Island Department of Environmental Management (DEM) and the Rhode Island Coastal Resources Management Council (CRMC) adopted the revised Rhode Island Stormwater Design and Installation Standards Manual (the Stormwater Manual).The Manual is intended to provide guidance in planning and designing effective control measures to persons developing properties subject to state and local regulatory review.

Stormwater Management Minimum Standard 1 of the Manual requires the use of Low Impact Development (LID) planning and design techniques as the primary method of stormwater control to the maximum extent practicable[1]. Stormwater Management Minimum Standard 10, entitled Construction Erosion and Sedimentation Control, requires that Soil Erosion and Sedimentation Control (SESC) measures be utilized during the construction phase as well as during any land disturbing activities. Minimum Standard 10 contains Performance Criteria for all SESC Plans submitted to the RI DEM and CRMC for permitting under State Regulations and requires SESC measures to be designed according to the guidelines in the most recent edition of the "Rhode Island Soil Erosion and Sediment Control Handbook".

---

[1] For all references to "maximum extent practicable" in this handbook, an applicant must demonstrate the following: (1) all reasonable efforts have been made to meet the standard in accordance with current local, state, and federal regulations, (2) a complete evaluation of all possible management measures has been performed, and (3) if full compliance cannot be achieved, the highest practicable level of management is being implemented.

The Rhode Island Department of Environmental Management (RI DEM)
The RI DEM currently administers a number of programs that require stormwater management. Activities subject to state regulatory review in accordance with the Freshwater Wetland, Water Quality, Groundwater Discharge Program and the Rhode Island Pollutant Discharge Elimination System (RIPDES) Regulations require applicants to comply with the RISDISM. In 2011, the Freshwater Wetland, Water Quality, and Groundwater Discharge Program Regulations were amended to require the use of the Stormwater Manual. In 2013 the RIPDES Construction General Permit was re-issued to include references to the Stormwater Manual and to be consistent with EPA National Effluent Limitation Guidelines established for the Construction and Development Point Source Category.

Coastal Resources Management Council (CRMC)

The Coastal Resources Management Council (CRMC) requires stormwater management, including erosion and sediment control, for projects located within that agency's jurisdiction (i.e., on a shoreline feature or its 200-foot contiguous area, within a Special Area Management Plan (SAMP) boundary, freshwater wetlands in the vicinity of the coast or certain statewide threshold activities). The CRMC along with agency partners DEM and Department of Administration developed the Rhode Island Coastal Non-Point Pollution Control Program (RICNPCP) in July 1995 to comply with the requirements of section 6217(g) of the 1990 Coastal Zone Management Act reauthorization. Existing CRMC regulations comply with the federal requirements to address storm water management and erosion and sediment control for new development projects within the state.

Readers are advised to refer to specific program requirements of the applicable state agencies to determine if a given project is regulated and whether this Handbook is applicable. Applicants should consult this Handbook for guidance on required and recommended elements to achieve erosion and sediment control goals for their projects and meet the Performance Criteria in Minimum Standard 10 of the Stormwater Manual.

Local Stormwater Management and Soil Erosion and Sediment Control Programs

Municipal officials may also use this Handbook to support local storm water management programs and soil erosion and sediment control requirements by incorporating or referencing the Handbook into local ordinances. The Handbook fulfills the requirements of Rhode Island's Soil Erosion and Sediment Control Act (RIGL 45-46) by providing guidance to municipal planning and zoning commissions. Title 45 Chapter 46 of the Rhode Island General Laws entitled: "Soil Erosion and Sediment Control Act" establishes the findings, purpose and the grant of basic local authority for the formulation, enactment and enforcement of local ordinances. The Act also specifies local authority review and approval processes, inspections and enforcement provisions and establishes the owner as responsible and liable for the maintenance of all erosion and sediment control devices and measures in working condition. The Act also establishes minimum requirements for Soil Erosion and Sediment Control Plans and establishes "performance principles" to be achieved in the design of the proposed development.

The RI General Assembly passed legislation in 2012 (RIGL § 45-61.2-2) that authorizes cities and towns to require compliance with the RI Storm Water Manual for any development, redevelopment or land disturbance activity. Most municipalities and large operators of stormwater systems (e.g., Rhode Island Department of Transportation (RIDOT) are regulated under the Rhode Island Pollutant Discharge Elimination System (RIPDES) Municipal SeparateStorm Sewer System (MS4) program and are required by their MS4 permits to have applicants who apply for local permits adhere to this Handbook. Because local program requirements vary somewhat and are subject to change, users of the Handbook who are applying for local permits are encouraged to consult the local ordinances or procedures, as part of developing a stormwater management plan for their project.

How to use this Handbook

This Handbook can be used for many purposes and by many different parties. The four most common users are likely designers, municipal officials, property owners, and regulatory program reviewers.

This Handbook provides technical guidance for soil and water resource management to prevent soil erosion and control sedimentation on lands being developed for residential, commercial, industrial or recreational use. This Handbook:

- Explains the process of soil erosion and resulting sedimentation;
- Describes the site planning process as it relates to soil erosion and sediment control;
- Provides guidance, technical specifications, design aids and supporting data needed for the planning, design, construction and maintenance of conservation systems to control soil erosion and sedimentation; and
- Provides useful information to developers, consultants, property owners, government officials and others dealing with land use management.

Readers are advised to refer to the applicable State Regulations and Local ordinances to determine who may prepare a SESC Plan. In most cases a SESC Plan subject to review by a State Agency must be prepared by a licensed professional. There are groups of professionals with specific knowledge and experience needed to select the appropriate measures in this handbook for specific applications such as a Professional Engineer licensed to practice in the State of Rhode Island, a Certified Professional in Erosion and Sediment Control (CPESC), a Certified Professional in Storm Water Quality (CPSWQ), or a Registered Landscape Architect licensed to measure in the State of Rhode Island. Activities which involve significant land grading or require an engineered site design must prepared by a Professional Engineer licensed to measure in the State of Rhode Island. Professional Engineers are responsible for developing plans that correctly select, size, layout, and specify measures based on adequately acquired knowledge of site conditions and sound engineering measure.

The measures prescribed in the plan must be implemented and maintained correctly by those responsible for the operation of the construction site. Construction is a dynamic process and all interim worksite conditions cannot always be anticipated in the planning and design of the project. Therefore, the site operator must be prepared to make corrective action, augmenting existing measures or adding new ones as site conditions warrant to prevent transport beyond the designed work limits. The site operator should consult with the design professional especially in cases that involve the design and engineering of new or significantly modified structural measures and in the cases where the original measure has proven to be ineffective. Design plans and specifications for a project often call for the use of non-proprietary erosion and sediment control products, it is the operator's responsibly to select a product that meets the design's specifications and to install the product following the manufacturer's directions.

Various words are used in the Handbook to indicate the importance of a particular design standard or criterion in meeting the objectives in this Handbook. These terms and their meanings in this context are as follows:

- *Must, shall, required* - The design standard or criterion is essential; it is not optional. A written technical justification that is acceptable to the approving agency must be provided if the standard or criterion is not used or achieved;

- *Should* - A well-accepted measure; a satisfactory and advisable option or method. It is optional, but subject to review and consent by the approving agency; and

- *May* - It is recommended for consideration by the designer; it is optional.

Designers should be aware that the figures and photographs included are schematic graphics only. Design plans should be consistent with the schematic figures when using the method or measure described, but must be completely detailed by the designer for site-specific conditions and construction purposes. In addition, the appendices present additional, more detailed technical information that supports the design, construction, and maintenance of effective control measures. Designers should be aware that reliance on the "guidance" contained in this handbook shall not relieve the reader from compliance with sound engineering judgment or compliance with the required criteria listed elsewhere, nor shall the authors be liable for the use or misuse of this information.

Contact Information

Department of Environmental Management

To ensure that the project meets the State's regulatory requirements, applicants should consult the following offices at DEM Office of Water Resources:

- Freshwater Wetlands Program
- Water Quality Certification Program
- RIPDES Program
- TMDL Program
- Groundwater Discharge Program

Find information on the RISDISM and the OWR Coordinated Storm Water Permitting Programs at www.dem.ri.gov. To contact the Office of Water Resources by telephone call 401-222-4700.

Rhode Island Department of Environmental Management
235 Promenade Street
Providence, RI 02908

Applicants are also encouraged to contact DEM's Office of Customer and Technical Assistance (OCTA) at 401-222-4700 to schedule a pre-application meeting.

Coastal Resources Management Council

If the project is located in CRMC jurisdiction, consult the Rhode Island Coastal Resources Management Program and applicable Special Area Management Plans. See: www.crmc.ri.gov

Rhode Island Coastal Resources Management Council Oliver Stedman Government Center
4808 Tower Hill Road
Wakefield, RI 02879

401-783 3370

Local Officials

In addition, applicants should consult with their local building official and planning or zoning office in order to identify any local stormwater management or erosion and sediment control ordinances.

Part B. Erosion and Sediment Pollution

Statement of the Problem

Each year more than one million acres of land in the United States are converted to urban use. These land use changes are the source of much of the sediment that pollutes our streams, rivers, lakes, and reservoirs.

Erosion on agricultural land occurs mainly as sheet and rill erosion over a period usually measurable in years. Conversely, on developing land, erosion is usually in the form of gully erosion on land disturbed for a year or less. Sheet and rill erosion involve shallow, low energy flows, which transport soil particles comparatively short distances, with soil usually remaining on site. Gully erosion is the result of concentrated flows of surface runoff. These high-energy flows increase the cutting action and transport of soil as sediment. Both conditions result in a lower-quality soil resource.

Disturbed land associated with development often has relatively short but steep slopes with much of the vegetative cover removed. Excavation, filling, and stockpiling operations result in un-compact soil subject to the erosive action of concentrated surface flows.

The high sediment volumes resulting from gully erosion require costly on-and off-site cleanup and the continual need for site stabilization during site development.

In Rhode Island, the problems associated with erosion and sedimentation and the need for regulations grew as urbanizing land use changes increased. Resource inventory figures compiled by the United States Department of Agriculture, Soil Conservation Service (now the Natural Resources Conservation Service) show that urban land use conversion occurred at an average rate of over 2,000 acres per year between 1967 and 1982. Problems with varied and unenforced local regulations prompted statewide recognition and legislation. To address some issues of water quality degradation as a result of urbanization, the RI General Assembly passed the Smart Development for a Cleaner Bay Act of 2007 (RIGL § 45-61.2). This legislation resulted in the creation of the revised *RI Stormwater Manual (2010)*. Given the rapid advancement of erosion and sediment control methods and techniques, it is now necessary to update the *RI Soil Erosion and Sediment Control Handbook* to compliment and be consistent with the storm water manual.

Soil Erosion: An Introduction

Soil erosion is the process by which the surface of the land is worn away by the action of wind, water, ice, and gravity. Natural, or geologic, erosion is a major factor in creating the topographic features of the Earth.

Natural erosion occurs at a very slow and uniform rate, except for some cases of shoreline and stream channel erosion.

Accelerated erosion occurs when the surface of the land is disturbed, vegetation is removed (by either natural forces or man's activities), and exposed, unprotected soil is subject to erosion by wind or water.

Accelerated water erosion on disturbed areas, particularly construction sites, is the problem these guidelines address. The erosive action of water can be separated into two categories: raindrop erosion and sheet/rill/gully erosion. Raindrop erosion is the result of the vertical force of falling water. Sheet, rill, and gully erosion are the result of the horizontal force of flowing water. Both forces detach and move soil particles.

Types of Erosion (See Figure 1)

Erosion resulting from the vertical force of falling water

- Raindrop Erosion: Raindrop erosion initiates the water erosion process. The impact of raindrops dislodges soil particles and splashes them into the air. These detached particles are then available for transport by flowing water.

Erosion resulting from the horizontal force of flowing water

- Sheet Erosion: Sheet erosion is caused by shallow sheets of water flowing off the land. These very shallow moving sheets of water are seldom the detaching agent, but the flow transports soil particles that are detached by raindrop impact. The shallow surface flow rarely moves as a uniform sheet for more than a few feet on land surfaces before concentrating in the surface irregularities.
- Rill Erosion: Rill erosion develops as shallow surface flows begin to concentrate in the low spots of the irregular conformation of the land surface. As the flow changes from the shallow sheets to the deeper flow in these low areas, the velocity and turbulence of flow increase. The energy of this concentrated flow is able to both detach and transport soil materials. This action begins to cut tiny channels of its own. Rills are small, but well defined channels that are, at most, only a few inches deep.
- Gully Erosion: Gully erosion occurs as the flow in rills comes together in larger and larger channels. Size is the major difference between this and rill erosion. Gullies are too large to be repaired with conventional tillage equipment and usually require heavy equipment and special techniques for stabilization.
- Channel Erosion: Channel erosion occurs as the volume and velocity of runoff concentrates in channels and waterways and causes movement of streambed, channel, swale, and bank materials.

Erosion resulting from construction in waterways

When conducting in-stream construction, stabilization, and waterway restoration activities, the measures and solutions described in this Handbook may not apply. Examples of the types of projects that are not specifically addressed in this Handbook include culvert installations or replacements, utility crossings, temporary instream construction activities, channel stabilization and rehabilitation, and permanent and temporary stream crossings. Issues directly related to construction in or immediately adjacent to waterways may be more appropriately addressed through the Rhode Island state coastal program administered by the Coastal Resource Management Council (CRMC) or the Rules and Regulations Governing the Administration and Enforcement of the Fresh Water Wetlands Act administered by the RI Department of Environmental Management. In such instances, it is suggested that project designers, engineers, inspectors, and regulatory officials utilize other pre-existing guidance documents which better address the approaches frequently encountered in the waterway construction process.

Erosion resulting from the action of waves

- Shoreline Erosion: Shoreline erosion occurs along shorelines abutting tidal and inland waters as wave action erode inland and coastal shorelines.

NOTE: Since shoreline erosion is primarily driven by storms and wave action, not rainfall, the measures and solutions described in this manual do not apply. Issues of coastal erosion are more appropriately addressed through the Rhode Island state coastal program administered by the Coastal Resources Management Council (CRMC).

Figure 1. The Five Types of Erosion

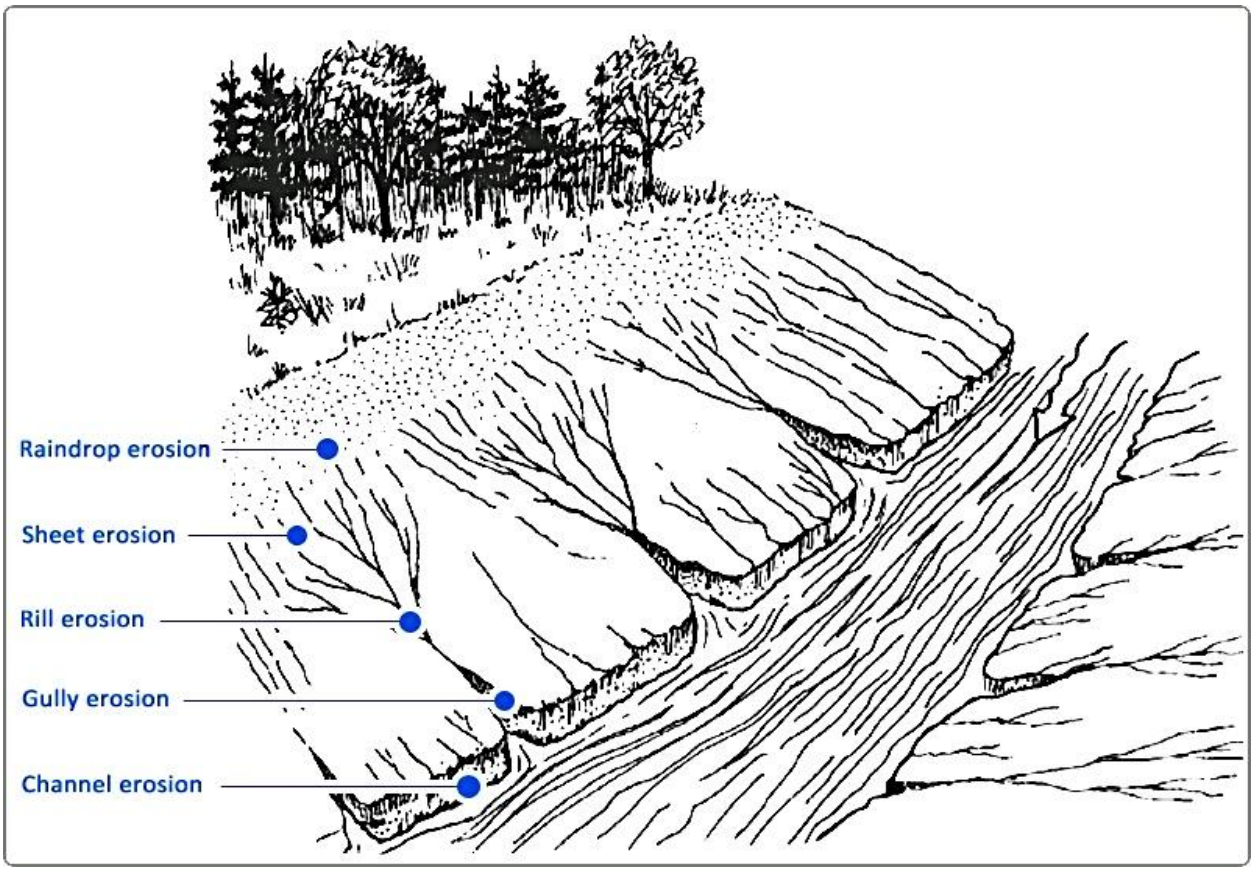

(Credit: *2002 Connecticut Guidelines for Soil Erosion and Sediment Control*)

Factors Influencing Erosion

Introduction

The erosion potential of any area is determined by five principal factors. It is a reflection of all these erosion factors combined. Although each of these erosion factors is discussed separately here, they are interrelated in determining erosion potential; no one factor alone determines erosion potential.

- Soil characteristics
- Vegetative cover
- Topography
- Climate
- Dewatering activities (the turbidity of the water being pumped and its discharge velocities

Figure 2 summarizes how erosion potential is influenced by these various factors. Understanding these factors of soil erosion will help the designer and planner select appropriate soil erosion control measures. Planning for soil conservation and water management requires knowledge of the relationship among these factors and how these factors can be influenced to reduce soil loss. In order to better understand the relationship of planned activities to soil erosion, a predictive soil erosion loss model, the Revised Universal Soil Loss Equation (RUSLE), was developed. See **Appendix I** for a discussion of **RUSLE2**.

Figure 2. Factors Influencing Erosion Potential

	Erosion Potential	
Factor	**Lower**	**Higher**
Soil Characteristics		
soil texture	gravel, coarse sands	fine sands & silt
organic content	highly organic	no organic
soil structure	blocky	granular
soil permeability	sand/gravel	silt/clay
Vegetative Cover		
% cover	100%	0%
type of cover	treed with groundcover/ mulch	no cover
Topography		
slope length	short	long
slope gradient	flat	steep
Climate		
rainfall intensity	low intensity	high intensity
rainfall frequency	infrequent	frequent
rainfall duration	short duration	long duration
wind	calm	gusty
temperature	frozen	thawed
Special Case - Dewatering		
dewatering discharge velocities	low velocity	high velocity

(Credit: *2002 Connecticut Guidelines for Soil Erosion and Sediment Control*)

Soil Characteristics

Soil characteristics which influence erosion by rainfall and runoff are those properties which affect the infiltration capacity of a soil and those which affect the resistance of the soil to detachment and transport by falling or flowing water. The following characteristics are important in determining soil erodibility.

- Texture (particle size and gradation)
- Organic matter content
- Structure
- Permeability

Soils containing high percentages of fine sands and silt are normally the most erodible. As the clay and organic matter content of these soils increases, the erodibility decreases. Clays act as a binder to soil particles, thus reducing erodibility. However, while clays have a tendency to resist erosion, once eroded they are easily transported by water. Soils high in organic matter have a more stable structure which improves their permeability. Such soils resist raindrop detachment and infiltrate more rainwater. Gravelly soils are usually the least erodible. Soils with high infiltration rates and permeability's either prevent or delay and reduce the amount of runoff.

Vegetative Cover

Vegetative cover plays an important role in controlling erosion in the following ways:

- Protects the soil surface from the impact of falling rain;
- Holds soil particles in place;
- Maintains the soil's capacity to absorb water;
- Slows the velocity of runoff;
- Removes subsurface water between rainfall events through the process of evapotranspiration; and
- Improves infiltration rates.

By limiting and staging the removal of existing vegetation, and by decreasing the area and duration of exposure, soil erosion and sedimentation can be significantly reduced. Give special consideration to the maintenance of existing vegetative cover on areas of high erosion potential such as erodible soils, steep slopes, drainage ways, and the banks of streams.

Topography

Topography describes the configuration of the land surface. The size, shape and slope characteristics of a watershed influence the amount and rate of runoff. As both slope length and gradient increase, the rate of runoff increases and the potential for erosion is magnified.

Climate

Climate is the sum total of all atmospheric influences, principally moisture (including rainfall), temperature, wind, pressure, and evaporation. It determines the frequency, intensity, and duration of rainfall that in turn determines the amounts of runoff produced in a given area. As both the volume and velocity of runoff increase, the capacity of runoff to detach and transport soil particles also increases. Where storms are frequent, intense, or of long duration, erosion risks are high. Seasonal and regional changes in temperature, as well as variations in rainfall, help to define the high erosion risk period of the year.

Although wind can potentially remove more sediment than rainfall, in most cases in Rhode Island it plays a relatively minor role in soil erosion. Wind’s impact on the land is generally limited to large areas that are unprotected for long periods of time. Wind can also agitate water bodies sufficiently to induce erosive wave action and/or cause the suspension of deposited sediments.

One period of higher erosion potential exists during the spring thaw. It is a time when the coastal storm track increases rainfall potential. Additionally, because the ground is still partially frozen, the absorptive capacity is reduced. While frozen soils are relatively erosion resistant, they melt from the top down, creating a soft erodible surface over a hard impervious subsurface. In Rhode Island, thawing of the soils often occurs in conjunction with the early spring rains combined with snow melt. Additionally, soils with high moisture content are subject to frost heaving and can be very easily eroded upon thawing.

Types of Sediment and Sedimentation

From the time a soil particle is detached (either by rain drop splash or moving water), the velocity, turbulence and the size and types of material available are the primary factors determining the nature of the sediment load. The sediment being carried is either in the form of a suspended load, a bed load, or both.

- Suspended Load: Suspended load is generally comprised of very fine material (clays and silts) and stays in suspension for long periods of time resulting in a condition called turbidity. The amount of these materials in suspension is dependent on the type of soil and the resistance to detachment by the erosive agent. Turbidity is measured with a nephelometer and recorded as nephelometric turbidity units
- Bed Load**:** Bed load is the sediment that moves on or near the stream bed. Typically this material moves at velocities less than the surrounding flow and can be measured in tons per unit of time. Bed loads are normally comprised of sands, pebbles and cobbles.
- Total Sediment Load**:** The amount of the total sediment load being carried as suspended load and/or bed load is related directly to the flow of the water. The movement of the sediment load tends to be in balance with flow conditions. This has an important bearing on channel stability. If the flow becomes loaded beyond its transporting capacity, deposition will occur. However, if the load is less than the transporting capacity, the flowing water attacks the channel until a balance between load and capacity has been achieved. Any change in sediment load or flow characteristics will have an effect on channel stability.
- Deposition**:** Deposition is the inverse of detachment. Deposition occurs when the carrying capacity of the flow is reduced to a point below that needed to carry the sediment load. Deposition is a selective process. As flows slow down, the coarser fragments fall out of the water column first, followed by finer and finer particles, resulting in a noticeable gradation of particle sizes in the sediments.

  Sediment deposits may occur in water bodies or on land. Deposits occur in water as a faster flowing stream flows into a slower one or into an area of slack water such as a pond or lake or ocean. A stream flowing from a steeper gradient to a lesser one will also lose velocity and carrying capacity and will form deposits. Additionally, deposition can take place on the inside of bends of rivers and streams where flow velocities tend to be slower than on the outside of the bends. Deposits can also occur on land when runoff loses velocity and hence the capacity to carry the same sediment load.

Figure 3. Examples of Levels of Turbidity

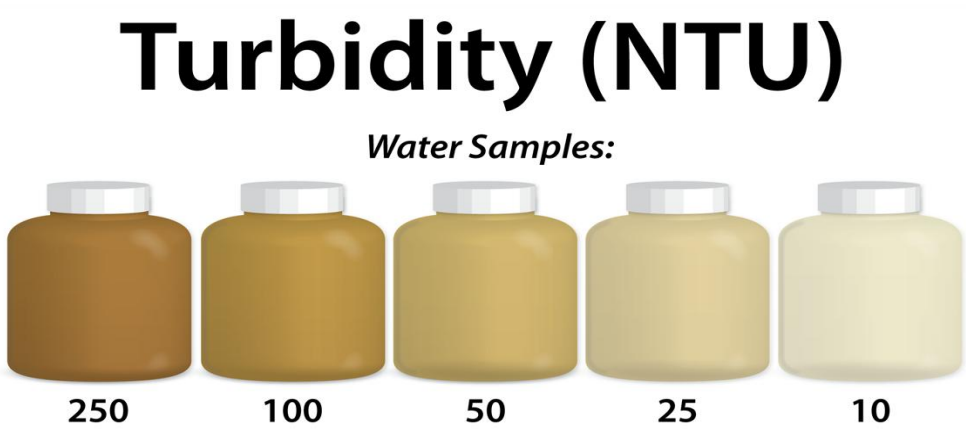

Sediment Pollution and Damage associated with Land Use Changes and Development

Sediment pollution is soil out of place. It is the direct and indirect result of human activities that lead to severe soil loss. Of the more than four billion tons of sediment delivered to our nation's water bodies, about one billion tons reach the ocean; the remainder is deposited in local water bodies. Much of the total sediment loss is generated by highway construction and land development projects.

Sediment pollution causes physical, chemical, and biological damages. The type of damage is related to the size of the sediment particle**. Figure 4** shows the relationship of particle size and character to damage or impact.

Figure 4. Particle Size vs. Damage Impact

Particle Size		
Large		Small
Boulders > Cobble > Gravel	>>	Coarse sand, Fine sand, Silt, Clay
Biological Damages		
Burried bottom dwelling plants Damaged rooted plants	>>	Damage to eggs, fry, and the food chain in general Increased algal blooms Clogged fish gills and increased disease
Chemical Damages		
Increased water temperature due to shallowing	>>	Increased water temperature due to opacity Lower levels of dissolved oxygen Increased nutrient transport and deposition
Physical Damages		
Reduced channel capacity and increased flood hazards Increased maintenance of culverts	>>	Diminished recreation and drinking water supply capacity due to increased turbidity Diminished aesthetics due to increased turbidity

(Credit: *2002 Connecticut Guidelines for Soil Erosion and Sediment Control*)

Many habitats, businesses, and people may be adversely affected by construction site erosion and sedimentation, regardless of the size of the area being developed. Erosion and sediment from construction sites often cause considerable economic damage. Sediment deposition in waterways and reservoirs creates or aggravates flooding, leads to surface water pollution, has adverse impacts on recreation, and damages natural resources and wildlife.

It is because of these adverse effects that steps must be taken to control the erosion and sedimentation that is associated with land use changes and development.

Land use changes and land development activities can detrimentally affect natural on-site drainage and storm water runoff patterns by:

- Removing the existing protective vegetative cover
- Prolonging the exposure of unprotected disturbed areas.
- Exposing underlying soil or geologic formations less pervious and/or more erodible than the original soil surface.
- Compacting soils with heavy equipment and increasing impervious surfaces, thereby reducing rainfall absorption and increasing runoff.
- Modifying drainage areas
- Altering the topography in a manner that result in shortened “times of concentration” of surface runoff (e.g. altering steepness, distance and surface roughness, and installation of “improved” storm drainage facilities).
- Altering the groundwater regime (e.g. placing a detention basin at the top of a slope).

Other Sources of Pollution Associated with Construction Activity

As noted above, sediment is the principal pollutant in stormwater discharges from construction sites. However, construction projects generate large amounts of building-related waste, which can end up polluting stormwater if not properly managed. Below is a brief overview of the wide range of materials and wastes that may be present at a construction site and in need of proactive management measures to limit the possibility of stormwater transport and pollution. (Source: Developing Your Stormwater Pollution Prevention Plan – A Guide for Construction Sites, USEPA May 2007, EPA-833-R-06-004)

- Solid Waste and Litter: Design proper management procedures and measures to prevent or reduce the discharge of pollutants to stormwater from solid or liquid wastes that will be generated at your site. Measures such as trash disposal, recycling, proper material handling, and cleanup measures can reduce the potential for stormwater runoff to pick up construction site wastes and discharge them to surface waters.
- Stockpiled and Stored Materials: Construction sites must have a plan to comprehensively handle and manage building materials, especially those that are hazardous or toxic.
- Hazardous Materials: Paints, solvents, pesticides, fuels and oils, other hazardous materials or any building materials that have the potential to contaminate stormwater should be stored indoors or under cover whenever possible or in areas with secondary containment. A posted plan should clearly identify materials handling areas, material

storage requirements; ways to reduce the chance of spills; and procedures for spill containment and cleanup, disposal of contaminated materials; and required training for those responsible for spill prevention and response.

- Concrete: Concrete contractors should be encouraged, where possible, to use the washout facilities at their own plants or dispatch facilities. If it is necessary to provide for concrete washout areas on-site, specific washout areas and facilities designed to handle anticipated washout water should be designated. Washout areas should also be provided for paint and stucco operations. Because washout areas can be a source of pollutants from leaks and spills, it is recommended that owners and operators locate them at least 50 yards away from storm drains and watercourses whenever possible.
- Vehicle Fueling and Maintenance: Performing equipment/vehicle fueling and maintenance at an off-site facility is preferred over performing these activities on the site, particularly for road vehicles (e.g., trucks, vans). For grading and excavating equipment, this is usually not possible or desirable. Create an on-site fueling and maintenance area that is clean and dry. The on-site fueling area should have a spill kit, and staff should know how to use it. If possible, conduct vehicle fueling and maintenance activities in a covered area; outdoor fueling and maintenance is a potentially significant source of stormwater pollution. Significant maintenance on vehicles and equipment should be conducted off-site.
- Equipment and Vehicle Washing: Environmentally friendly washing measures can be practiced at every construction site to prevent contamination of surface and groundwater from wash water. Procedures and measures include using off-site facilities; washing in designated, contained areas only; eliminating discharges to storm drains by infiltrating the wash water; and training employees and subcontractors in proper cleaning procedures. In addition, a construction site might have sources of runoff that are not generated by stormwater. These non-stormwater discharges include fire hydrant flushing, vehicle or equipment wash water (no detergents), water used to control dust, and landscape irrigation. The owner and operator must take appropriate steps to infiltrate these sources of uncontaminated water into the ground. In some instances it may be possible to route these sources of water to temporary sediment ponds or detention basins or otherwise treat them with appropriate best management measures.

SECTION TWO:
SITE PLANNING AND MANAGEMENT

(Photo Credit: US EPA)

Part C. Control Measures: Selecting the Right Ones ..... (1 - 5)
Part D. Soil Erosion and Sediment Control Plans ..... (1 - 16)
Part E. Construction Phasing and Sequencing ..... (1 - 4)

Part C. Control Measures: Selecting the Right Ones

Control Measures

The accompanying figures (**Figures 1 through 5**) can be used to guide the selection of control measures. Following the figures in steps from top to bottom, the user can identify the potential problems and potential solutions for control of these problems.

Control measures can be divided into the following broad categories.

- Site Planning and Management
- Pollution Prevention (or Good Housekeeping) Measures
- Erosion Controls,
- Runoff Controls, and
- Sedimentation Controls.

These measures are used in the "Avoid, Reduce and Manage (ARM)" approach of stormwater management and low impact development where one is to: Avoid erosion by controlling it with appropriate control measures; reduce runoff volumes with control measures; and manage the moving sediment that is unavoidable with appropriate control measures.

By using a combination of the different types of control measures, costs can usually be kept to a minimum.

Site Planning and Management

Site planning and management address the need to explicitly plan out all phases of construction including: land preparation, construction, equipment and vehicle management, site management, timeframes and seasons, and contingency plans.

Pollution Prevention and Good Housekeeping Measures

Pollution Prevention/Good Housekeeping is a set of measures that focus on the control of pollutants other than sediment, such as from trash containers and fluids from construction equipment.

Erosion Control Measures

The first and most important line of defense is to prevent erosion. Erosion control is accomplished by protecting the soil surface from raindrop impact and overland flow of runoff. Properly installed and maintained erosion controls are the primary defense against sediment pollution. The best way to protect the soil surface is to preserve the existing vegetation. Where land disturbance is necessary, refer to **Sections 4: Erosion Control Measures**. Soil Erosion and Sediment Control Plans (SESC Plans) must contain provisions for permanent stabilization of disturbed areas. Selection of permanent vegetation should include the following considerations.

- Planting requirements
- Adaptability of species to site conditions
- Aesthetic appearance of completed plantings
- Maintenance requirements

Runoff Control Measures

Runoff controls are used to slow the velocity of concentrated water flows. By intercepting and diverting stormwater runoff to a stabilized outlet or treatment control measure, erosion and sedimentation are reduced.

Sedimentation Control Measures

Sedimentation controls are used to prevent moving sediment from leaving the construction site and entering environmentally important areas. Structures are generally more costly and less efficient than vegetative controls. However, they are often necessary since not all disturbed areas can be protected with vegetation. Structural measures are often used as a second or third line of defense to capture suspended sediment before it leaves the site. Refer to **Section Six: Sediment Control Measures** for specific structural measures.

Selecting Control Measures

Step 1: Identify Problem or Need

Site planning and management must be in place and operational for any construction project to proceed smoothly and with minimal site disturbance or difficulty.

Pollution prevention must be considered before any problems of vehicle or pollutant management arise.

Controlling erosion by protecting the land surface should be the first line of defense, especially where soil properties and topography of the site make the design of sediment trapping facilities impractical or for small-disturbed areas such as single lots.

Runoff must be controlled as it moves onto and through a construction site. This is the second line of defense.

Sediment trapping facilities are the third and final line of defense. They are generally used on large developments where major grading is planned, where it is impossible or impractical to control erosion, and where sediment particles are relatively large.

Step 2: Identify Problems Areas

Once a method of control is selected, potential erosion and sediment problem areas are identified. Areas where erosion is to be controlled will usually fall into categories of slopes, graded areas or drainage ways. Slopes include graded rights-of-way, stockpile areas, and all cut or fill slopes. Graded areas include all stripped areas other than slopes. Drainage ways are areas where concentrations of water flow naturally or artificially and the potential for gully erosion is high. Problem areas where sediment is to be controlled fall into categories of high or low sediment volume areas. High sediment volume areas include areas where sediment must be trapped using a structural measure. Low sediment volume areas are usually considered to be areas where sediment control can be accomplished with vegetative or non-structural measures.

Step 3: Identify Required Strategy

The third step in soil erosion and sediment control planning is to select the most appropriate strategy to solve the problem. The planning matrix will facilitate the selection process.

There may be several strategies used individually or in combination to provide the solution. For example, if there is a cut slope to be protected from erosion, the strategies may include a combination of: protecting the ground surface, diverting water from the slope, and/or shortening the slope length. If no rainfall, except that which falls on the slope, has the potential to cause erosion, and if the slope is relatively short, then protecting the soil surface may be all that is required to solve the problem.

Step 4: Select Specific Control Measure

This involves the selection and adaptation of a specific control measure to solve the site-specific erosion, runoff, or sediment problem. Select the measure that is most economical, practical, efficient, and adaptable to the site.

Once the specific control measure has been selected, illustrate where the measure will be used on the erosion and sediment control site plan. Standardized design, plan, and construction specification sheets can then be completed for each control measure.

Control Measure Flow Charts

Figure 1. Site Planning and Control Measure Flow Chart

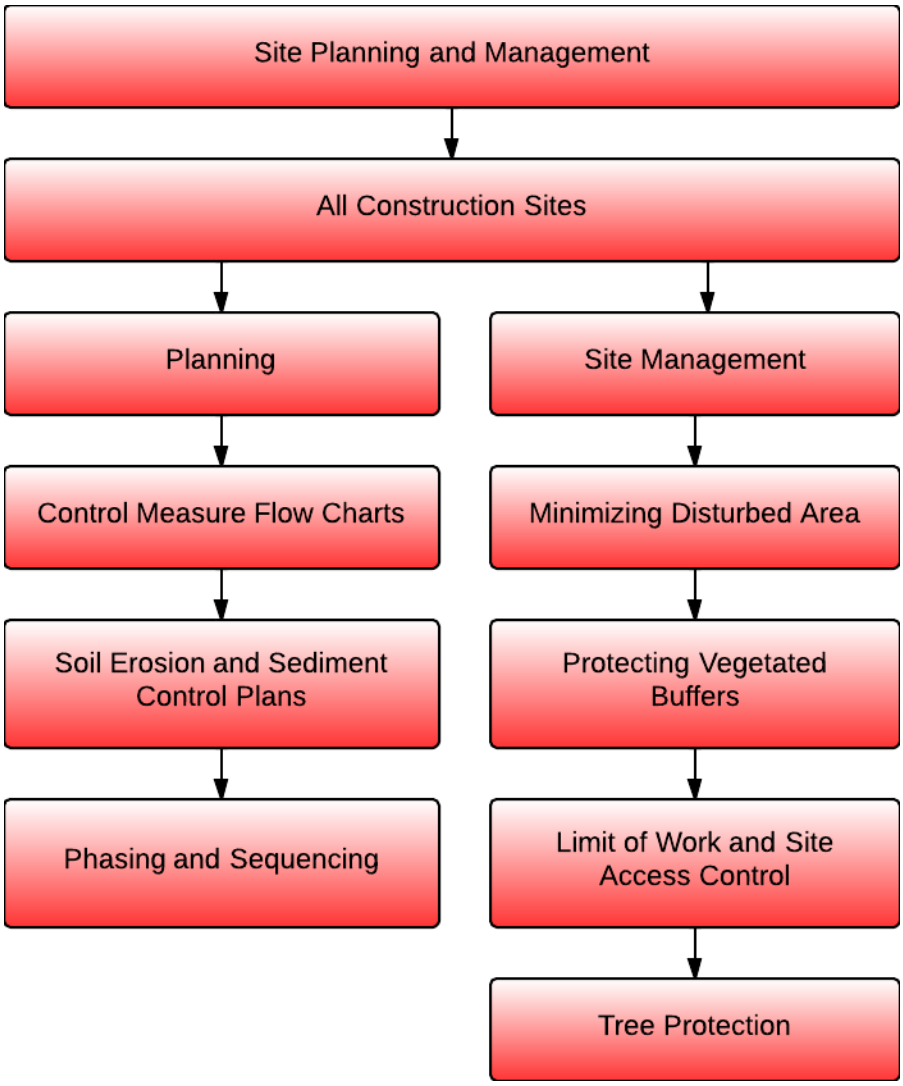

Figure 2. Pollution Prevention / Good Housekeeping Control Measure Flow Chart

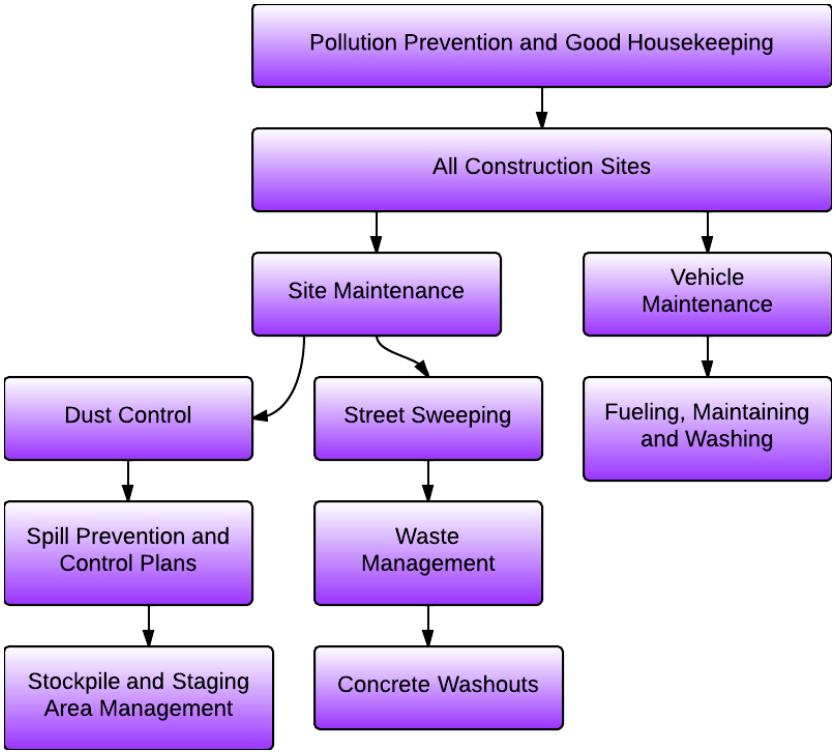

Figure 3. Erosion Control Flow Chart

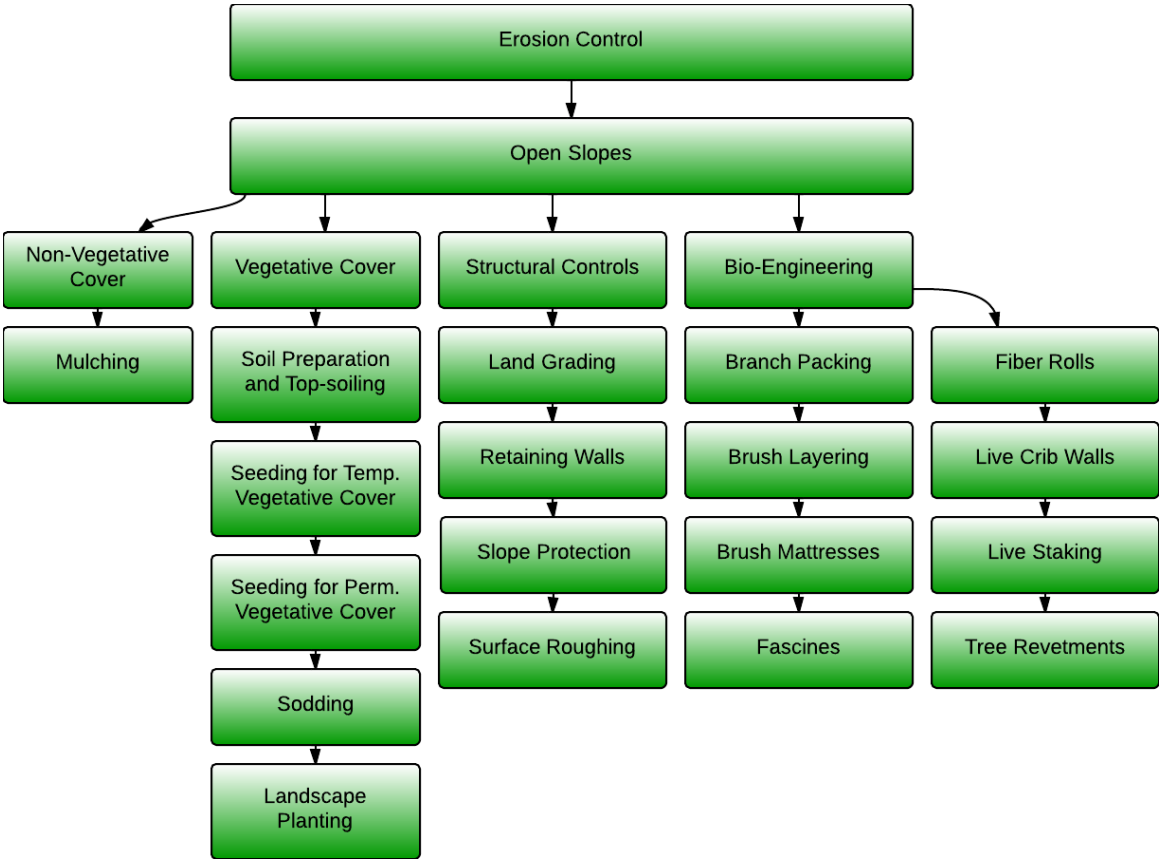

Figure 4. Runoff Control Flow Chart

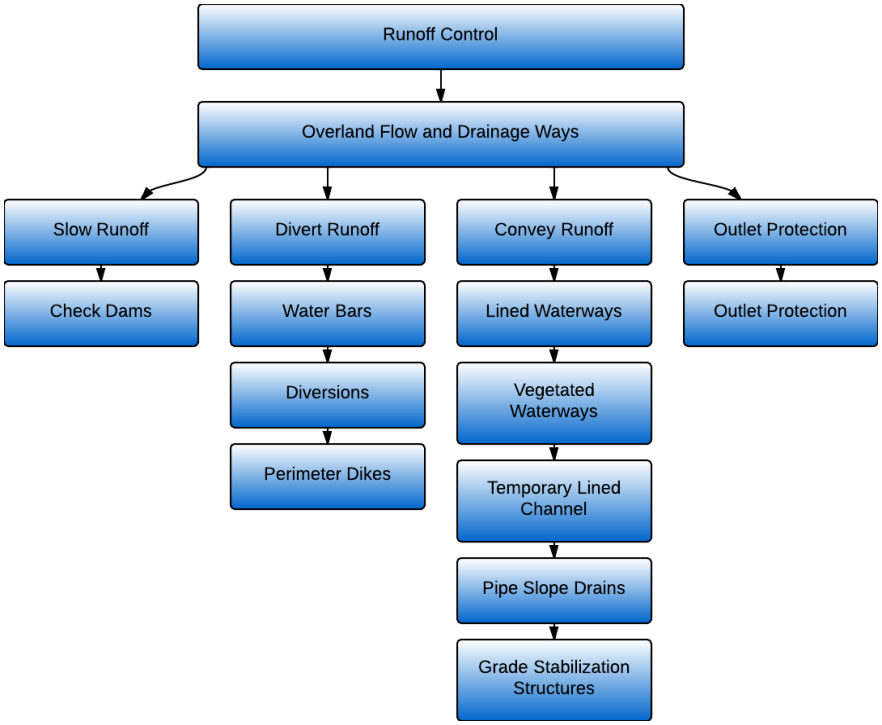

Figure 5. Sediment Control Flow Chart

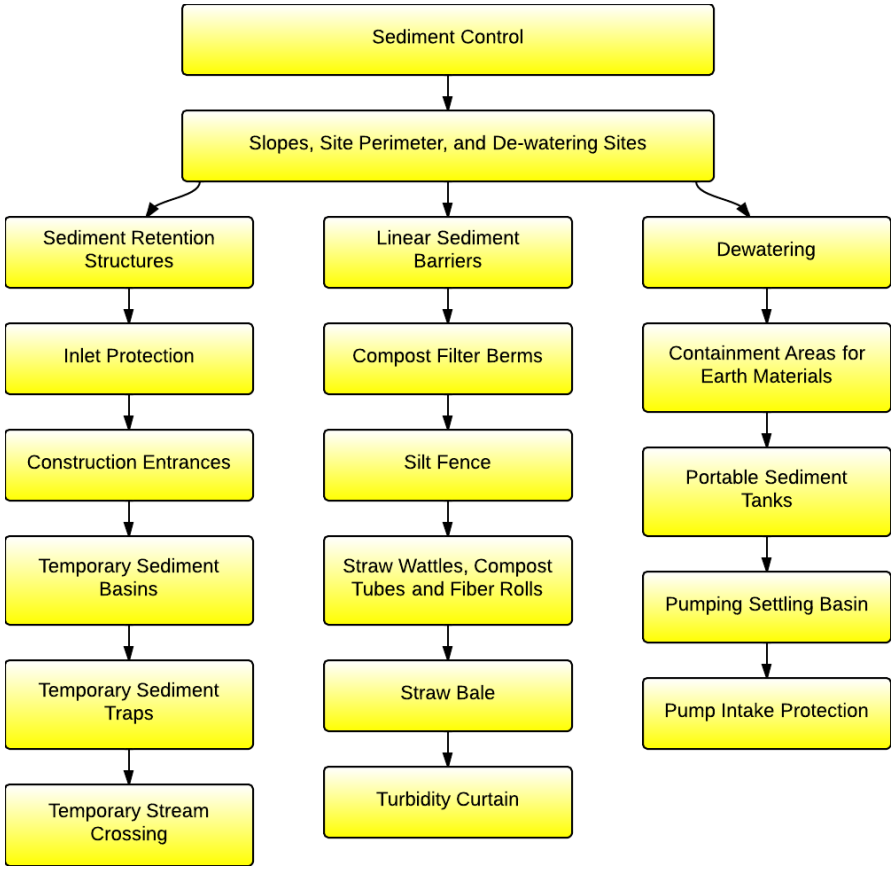

Part D. Soil Erosion and Sediment Control Plans

Definition

A Soil Erosion and Sediment Control Plan (SESC Plan) is a site-specific document that describes the potential for soil erosion and sedimentation to occur on a construction project. It explains and illustrates the control measures that will be used to control soil erosion, runoff, and sedimentation. In this Handbook, the terms Stormwater Pollution Prevention Plan (SWPPP) and SESC Plan are synonymous, including references to the RIPDES Construction General Permit and to local ordinances adopted in accordance with the Phase II MS4 Rules.

What is an "Adequate SESC Plan"?

Introduction

A SESC Plan must contain sufficient information to satisfy the reviewers that the regulatory requirements established for controlling soil erosion, runoff, and sedimentation have been adequately addressed for a proposed project. The length and complexity of the plan should be commensurate with the size of the project, site-specific conditions, and the potential for impacts to nearby resources such as water bodies or wetlands. For example, a SESC plan for construction of a house on a subdivision lot does not need to be as complex as a plan for a shopping center, but in both cases erosion, runoff, sedimentation, and pollution prevention control measures need to be implemented to prevent offsite impacts. Similarly, plans for projects on flat terrain will generally be less complicated than those on steep slopes.

Management Goals

A properly designed SESC Plan along with the proper installation, monitoring and maintenance of erosion, runoff, sediment, and pollution prevention control measures will minimize site soil erosion and prevent sediments from being discharged thereby protecting water quality, receiving conveyances and drainage systems, and downstream areas including cultural and natural resources and private properties.

The contents of the site-specific SESC Plan shall clearly demonstrate how the goals, outlined below, have been addressed in the design phase and are to be implemented in the construction phase.

- Avoid and protect sensitive areas and natural features through the use of Low Impact Design (LID) Planning and Site Design Strategies to avoid the impacts.
- Minimize disturbances and preserve topsoil through the use of LID Planning and Site Design Strategies to Reduce the Impacts.
- Control overland and concentrated flows.
- Protect drainage structures, conveyances, and receiving waters through the use of LID Planning and Design Strategies, Properly Designed and Constructed Temporary Control Measures and Pollution Prevention Control Measures.
- Protect undisturbed native soils where onsite wastewater treatment (OWTS) dispersal systems and stormwater filtering and/or infiltration systems are planned.

In order to comply with the goals set forth above, plan designers should use the control measures outlined in this Handbook to design appropriate, project-specific SESC Plans. In addition, plan designers and reviewers shall use the Handbook as a reference in determining the suitability and adequacy of SESC Plans.

Performance Criteria for Soil Erosion, Runoff, and Sedimentation Control Measures

Applicants (owners) must design, install, and maintain effective erosion, runoff, and sediment control measures that address the nature of stormwater run-on and runoff at the site, including factors such as expected flow from impervious surfaces, slopes, and site drainage features. These control measures must be designed to address the range of soil particle sizes expected to be present, site soils, slope, and the expected amount, frequency, intensity, and duration of precipitation. At a minimum the following Performance Criteria must be addressed in the SESC Plan and, as appropriate, on a *Site Constraint Map* (see Note below and **Appendix F**)

> **Note**:
>
> Site Constraint Map
>
> Constraints' mean any physical, technical, legal, environmental, topographical or other consideration that may potentially affect, limit, restrict or confine the location or other aspect of the project, within the project area and areas beyond the project that may be impacted by the project as directed by site conditions or the regulatory agency(s).
>
> Constraints are identified to ensure a comprehensive understanding of the project and surrounding areas. The Site Constraints Report, if required, contains information which is important in the identification of features and sensitive areas, e.g. elevated topography such as mountains; bodies of water such as rivers and lakes; designated or protected areas such as Appendix F; existing infrastructure such as roads and railways; archaeological and heritage sites such as national monuments; and many more.

1. Avoid and Protect Sensitive Areas and Natural Features.

a. Provide Natural Buffers and Maintain Existing Vegetation:

Throughout planning, design, and construction the Applicant must demonstrate that the activities are consistent with the *Rhode Island Stormwater Design and Installation Standards Manual (RISDISM)* - Minimum Standard 1, Low Impact Development (LID) Site Planning and Design Strategies designed to maximize the protection of native vegetation, natural drainage areas, streams, surface waters, and other wetlands including associated jurisdictional areas and buffers by locating sites in less sensitive areas. Section 4.5 of the *RISDISM* LID Site Planning and Design Criteria requires applicants to avoid the impacts, requiring the preservation of buffers and floodplains by delineating and preserving naturally vegetated riparian buffers and floodplains and implementing control measures to ensure that buffers and native vegetation are protected.

Existing vegetation within floodplains and wetland buffers shall be protected and remain undisturbed to the maximum extent practicable, particularly if forested and in native vegetation. This is where disturbed buffers should possibly be restored. Under the LID Site Planning and Design Strategies Minimum Standard 1, the Applicant must also address all applicable ordinances and regulations adopted by the municipality in which their project is situated. Areas of existing and remaining vegetation and areas that are to be protected during construction must be clearly marked on the plans and the natural

drainage areas, streams, surface waters and jurisdictional wetland buffers and other sensitive features to be avoided should be illustrated on a plan's Constraint Map.

The SESC Plan should describe the natural features, stormwater/OWTS infiltration sites, and other areas that will be protected, and how each will be protected during construction activity. The proposed and/or approved limits of disturbance (LOD) must be clearly shown on all SESC site plans, to include areas to be protected at both the perimeter of the construction site and within the construction site.

The SESC Plan should describe the areas that will be disturbed during construction and the techniques (e.g., signs, fences, etc.) that will be used to protect those areas that shall not be disturbed.

Prior to any land disturbance activities commencing on the site, the SESC Plan will require that the Applicant (operator or responsible person) must physically mark limits of disturbance (LOD), in accordance with approved plans, at the perimeter of the construction site and any areas to be protected within the site, so that workers can clearly see the areas to be protected throughout the construction period. For additional guidance on these techniques refers to **Measures, Minimizing Disturbed Area: Preserving Soils & Vegetation, Protecting Vegetated Buffers**, and **Limit of Work and Site Access Control**.

b. Minimize Amount of Soil Exposed by Phasing Construction Activity:

Describe the intended construction phasing and sequencing (timing) of major activities, including, but not limited to, grading activities, road and utility installation, and building phases. The estimated timetable and sequence of construction activities must address the following:

- Installation of erosion, runoff, and sediment control measures and temporary pollution prevention control measures.
- Protection of planned OWTS leach fields, stormwater infiltration sites and qualifying pervious areas from compaction.
- Inspection and maintenance of erosion, runoff, sediment control measures and other temporary pollution prevention control measures.
- Final site stabilization and removal of temporary erosion, runoff, sediment control measures, and temporary pollution prevention control measures.

Phasing should take into account the requirements to manage temporary changes to runoff volume and peak runoff rates due to changes to runoff characteristics caused by the construction activity. The total amount of land area disturbed at one time should be minimized as described in the phasing and sequencing schedule of the SESC Plan. Construction activity shall be phased to minimize the amount of area that is being actively disturbed.

The designer shall consider the changes in the type of surface cover as the site is developed. For new development, as surface cover changes from an existing condition of woods or meadow to the constructed impervious surfaces or compacted soils, the designer shall evaluate the temporary changes in runoff as the site is developed. This is especially important if the development is completed in large phases or is located in a sensitive or problematic area. Runoff calculations for these areas where temporary surface cover changes will occur shall be included in the SESC Plan with other runoff calculations for surface runoff for the design of temporary or permanent control measures or designer shall use default land cover condition of bare, compacted soil conditions.

Activities disturbing less than one acre or activities that will be completed within six months may not require phasing but should consider phasing if located in sensitive or problematic areas. Activities disturbing greater than five acres must include phasing in combination with other control measures.

Adequate temporary control measures must be installed on previous phases prior to initiating the land disturbance in subsequent phases until final site stabilization is achieved and post-construction control measures are brought on-line. For additional guidance on these techniques refer to **Construction Phasing and Sequencing.**

c. Minimize the Disturbance of Steep Slopes:

The SESC Plan must describe control measures that will be used to protect steep slopes during all phases of construction. Site owners and operators must avoid and minimize the disturbance of steep slopes through proper site design to the Maximum Extent Practicable (MEP) to comply with *RISDISM* - Minimum Standard 1, Low Impact Development Site Planning and Design Strategies. Chapter Four of the RISDISM – LID Site Planning and Design Strategies, Section 4.5.1 Avoid the Impacts also identifies steep slopes as an area that needs to be considered when applying LID strategies to a development project.

Steep slopes are defined as those that are 15% or greater in grade. Where disturbance to steep slopes is unavoidable and necessary, then alternative site design plans must be developed to address these critical areas, using retaining walls and other control measures to limit disturbance of steep slopes, and through implementation of detailed soil erosion, runoff, and sediment control measures. Examples of such control measures would include phasing disturbances to these areas and using both temporary and permanent stabilization control measures designed to be used on steep grades. Additional guidance can be found in **Measures, Land Grading, Retaining Walls, and Slope Protection** of this Handbook.

d. Preserve Topsoil and Minimize Compaction:

The SESC Plan must describe control measures that will be used to preserve the existing topsoil on the construction site.

Site owners and operators must preserve existing topsoil on the construction site to the maximum extent feasible and as necessary to support healthy vegetation. If it is determined that preserving native topsoil is infeasible, the reasons why this was determined must be addressed in the SESC Plan.

Some projects may be designed to be highly impervious after construction, and therefore little or no vegetation is intended to remain. In these cases preserving topsoil at the site would not be feasible. Some sites may not have space to stockpile topsoil on site for later use, in which case, it may also not be feasible to preserve topsoil at the construction site. For design specifications and guidelines regarding the preservation of topsoil refer to **Measure**, **Soil Preparation and Topsoiling**.

2. Minimize Sediment Discharges from the Site

a. Stabilize Soils:

The SESC Plan must describe control measures that will be used to stabilize soils throughout the duration of the construction project, including phased clearing/grubbing, initiating stabilization control measures, and maintaining stabilization control measures.

Construction projects subject to these requirements must also meet the deadlines for temporary and/or permanently stabilizing exposed portions of the site pursuant to the minimum requirements and guidelines contained in **Construction Phasing and Sequencing**. Stabilization of disturbed areas must, at a minimum, be initiated immediately whenever any clearing, grading, excavating or other earth disturbance activities have permanently ceased on any portion of the site, or temporarily ceased on any portion of the site and will not resume for a period exceeding fourteen (14) calendar days. Stabilization must be completed using vegetative stabilization control measures or using alternative control measures whenever vegetative control measures are deemed impracticable or during periods of drought. All disturbed soils exposed prior to October 15th shall be seeded by that date. Any such areas, which do not have adequate vegetative stabilization by November 15th, must be stabilized through the use of non-vegetative erosion control measures. In limited circumstances, stabilization may not be required if the intended function of a specific area of the site necessitates that it remain disturbed (i.e. construction of a motocross track). For control measures, design specifications, and guidelines regarding soil stabilization refer to **Section Four: Erosion Control Measures**.

b. Protect Storm Drain Inlets:

Describe control measures, including design specifications and details that will be used to prevent soil and debris from entering storm drain inlets. These control measures are usually temporary and are implemented before a site is disturbed. The SESC Plan must describe control measures, including design specifications and details, to be used to protect all inlets receiving stormwater from the project during the entire duration of the project.

If there is the potential for a stormwater discharge from the construction site to a storm drain inlet that then discharges to a surface water, the site Applicant (Owner and Operator) must install inlet protection control measures that remove any sediment from discharge prior to entry into the storm drain inlet. Refer to **Measure, Inlet Protection** to identify the control measures that would be best suited for the proposed construction site. The site Applicant (Owner and Operator) must clean, or remove and replace, the control measures as sediment accumulates, the filter becomes clogged, and/or performance is compromised. Accumulated sediment adjacent to the inlet protection control measures <u>must be removed</u> by the end of the same work day in which it is found or by the end of the following work day if removal by the same work day is not feasible.

c. Protect Storm Drain Outlets:

Describe control measures, including design specifications and details, to be used to protect outlets discharging stormwater from the project. Outlet protection must be used to prevent scour or erosion at discharge points. The function of the specified control measures must be to protect the soil surface, reduce velocity, and promote infiltration. For applicable control measures and design specifications refer to **Measure, Outlet Protection**.

d. Protect Post-Construction Stormwater Measures:

Identify the temporary control measures that will be installed to protect all permanent or long-term stormwater control measures as they are installed and throughout the construction phase of the project so that they will function properly when they are brought online. Examples of long-term control measures that may require protection include: infiltration basins, open vegetated swales and natural depressions, rain gardens, bioretention systems, vegetated buffer strips, and permanent detention/retention structures. Examples of temporary control measures that can be used to protect permanent stormwater control measures include: establishing temporary sedimentation barriers around infiltrating measures, ensuring proper material staging areas and equipment routing (i.e. do not allow construction equipment to compact areas where infiltrating control measures will be installed), and by conducting final cleaning and maintenance of structural long term control measures after construction is completed.

e. Establish Perimeter Control Measures and Sediment Barriers:

Describe the control measures to be used, including selection criteria and details that will filter and trap sediment to prevent it from leaving the construction site. For applicable control measures and design specifications refer to **Section Six: Sediment Control Measures**. Perimeter controls and sediment barriers must be installed along those perimeter areas of the site that will receive stormwater from earth disturbing activities. Maintenance of perimeter control measures and sediment barriers must be completed in accordance with the maintenance requirements specified in this Handbook for the control measures selected for use at the site.

3. Properly Design Constructed Stormwater Diversions, Conveyances, Channels, Traps and Basins to Manage Run-off

The SESC Plan must describe control measures that will be used to divert flows from exposed soils, retain or detain flows, or otherwise limit runoff and the discharge of pollutants from exposed areas of the site.

Structural control measures must be used to limit stormwater flow from coming onto the project area, and to divert and slow on-site stormwater flow from exposed soils to limit erosion, runoff, and the discharge of pollutants from the site.

Control measures that may be used to satisfy this requirement are contained in **Section Five: Runoff Control Measures** and **Section Six: Sediment Control Measures**. A description of proposed control measures, including design specifications and details must satisfy the following:

a. Divert or Manage Run-on from Up-gradient Areas:

Structural control measures must be used to limit stormwater flow from coming onto the project area, and to divert stormwater flow from exposed soils to limit erosion, runoff, and the discharge of pollutants from the site. Temporary conveyance measures must be sized to handle the peak flow from the 10-year, 24-hour Type III design storm. The reviewing authority may require temporary conveyance measures to be sized to handle the peak flow from larger design storms as determined on a case-by-case basis.

b. Properly Design Sediment Traps and Sediment Basins to Retain Sediment:

The SESC Plan shall implement a combination of measures that control erosion, control run-off, and control sediment. The combination of measures must be designed to prevent discharges of sediment. All plans shall include inlet protection, construction entrances, and containment of stockpiled materials. The designer should consider if conditions warrant the use of sediment traps, sediment basins, or sediment barriers. Control measures and/or methods that may be used are contained in **Section Six: Sediment Control Measures**.

Sediment traps, basins, and barriers are used to retain sediment on the site to protect streams, lakes, drainage systems, and adjacent property. These devices are used at the outlets of channels, diversions, and other runoff conveyance control measures to allow sediment-filled water to pool and sediment to settle. These control measures are often used as the last line of defense to stop sediment from leaving the site.

Selecting Appropriate Control Measures:

For disturbed areas <1 Acre - Those areas with a common drainage location that serves an area with less one (1) acre disturbed at one time, a combination of phasing, stabilization and conveyances that provide run-off control will be sufficient. In some cases, additional control measures may be required where site conditions warrant or a specific requirement exists in State regulations or Local ordinances.

For disturbed areas 1 to 5 Acres – Those areas with a common drainage location that serves an area between one (1) and five (5) acres disturbed at one time, a temporary sediment trap must be provided where attainable and where the sediment trap is only intended to be used for a period of six (6) months or less. For longer term projects with a common drainage location that serves between one (1) and five (5) acres disturbed at one time, a temporary sediment basin must be provided where attainable. Temporary sediment trapping measures must be designed in accordance with **Measure, Temporary Sediment Traps** and must be sized to have a total storage volume capable of storing one (1) inch of runoff from the contributing area or one hundred and thirty four (134) cubic yards per acre of drainage area. A minimum of fifty percent (50%) of the total volume shall be storage below the outlet (wet storage).

For disturbed areas > 5 Acres – Those areas with a common drainage location that serves an area with greater than five (5) acres disturbed at one time, a temporary (or permanent) sediment basin must be provided where attainable until final stabilization of the site is complete. Temporary sediment basins must be designed in accordance with **Measure, Temporary Sediment Basins**. The volume of wet storage shall be at least twice the sediment storage volume and shall have a minimum depth of two (2) feet. Sediment storage volume must accommodate a minimum of one year of predicted sediment load as calculated using the sediment volume formula provided in **Measure, Temporary Sediment Basins**. In addition to sediment storage volume and wet storage volume, the sediment basin shall provide adequate residence storage volume to provide a minimum 10 hours residence time for a ten (10) -year frequency, twenty four (24) hour duration, and Type III distribution storm.

c. Control Temporary Increases in Stormwater Velocity, Control Stormwater Volume, and Control Peak Flows Within the Site and At Discharge Points.

The Plan must identify all discharge points and propose a combination of measures to ensure control of both peak flow rates and total runoff volume to minimize flooding, channel and stream bank erosion in the immediate vicinity of discharge points. The plan must identify if discharge points from the site discharge directly to a Water of the State or to an off-site conveyance.

In most cases, the combination of measures that control erosion, control run-off, and control sediment will be adequate to control temporary increases in volume and peak flows. However, the designer must evaluate if conditions warrant the use of detention measures. The evaluation must include a description of site conditions and proposed on-site controls and conveyances for all discharge points.

For those projects proposing a common drainage location that serve an area with greater than five (5) acres disturbed at one time, the permitting agency may require peak flow control on a case-by-case basis.

The designer must ensure that the proposed combination of measures are adequate to protect the receiving waters and downstream conveyances from the excessive velocities created as a result of land disturbance activities.

Examples of velocity dissipation devices include but are not limited to check dams, diversions, and temporary lined channels. Control measures and/or methods that may be utilized may be found in **Section Five: Runoff Control Measures** and **Section Six: Sediment Control Measures**.

d. Utilize Surface Outlets:

To the maximum extent practicable, outlet structures must be utilized that withdraw water from the surface of temporary sedimentation basins, if required or specified by the designer, for the purpose of minimizing the discharge of pollutants. Exceptions may include periods of extended cold weather, where alternative outlets are required during frozen periods. If such a device is infeasible for portions of or the entire construction period justification must be made in the SESC Plan. Refer to **Measure, Temporary Sediment Basins** for outlet design guidance.

4. Implement Construction Activity Pollution Prevention Control Measures

a. Prohibited Discharges:

The purpose of pollution prevention is to prevent daily construction activities from causing pollution. The DEM Water Quality Regulations and the RI Pollution Discharge Elimination System regulations prohibit discharges from construction sites as specified below:

- Contaminated groundwater, unless specifically authorized by the RIDEM.
- Wastewater from washout of concrete, unless the discharge is contained and managed by appropriate control measures. Refer to **Measure, Concrete Washout** for guidance and more specific requirements.
- Wastewater from washout and cleanout of stucco, paint, form release oils, curing compounds, and other construction materials. Refer to **Measure, Waste Management**.

- Fuels, oils, or other pollutants used in vehicle and equipment operation and maintenance. Proper storage and spill prevention control measures must be utilized at all construction sites. Refer to **Measure**, **Spill Prevention and Control Plans**.
- Soaps or solvents used in vehicle and equipment washing. Refer to **Measure**, **Vehicle Fueling, Maintenance, and Washing**.
- Toxic or hazardous substances from a spill or other release.

The SESC Plan must describe the pollution prevention control measures that will be implemented to address the above listed pollutants. The Applicant (Owner and Operator) must design, install, implement, and maintain effective pollution prevention control measures to minimize the discharge of pollutants.

b. Minimize Off-Site Tracking of Sediments.

The SESC Plan must describe the location(s) of vehicle entrance(s) and exit(s) and stabilization control measures used to prevent sediment from being tracked off-site. Sediment track-out must be minimized onto off-site streets, other paved areas, and sidewalks from vehicles exiting the construction site. Owners and Operators must:

- Restrict vehicle use to properly designated exit points;
- Use properly designed and constructed construction entrances at all points that exit onto paved roads so that sediment removal occurs prior to vehicle exit. Refer to **Measure**, **Construction Entrances** and **Measure, Limit of Work and Site Access Control**.
- When and where necessary, use additional control measures to remove sediment from vehicle tires prior to exit (i.e. wheel washing racks, rumble strips, and rattle plates);
- Where sediment has been tracked-out from the construction site onto the surface of off-site streets, other paved areas, and sidewalks, the deposited sediment must be removed by the end of the same workday in which the track out occurs. Track-out must be removed by sweeping, shoveling, or vacuuming these surfaces, or by using other similarly effective means of sediment removal. Operators are prohibited from hosing or sweeping tracked-out sediment into any stormwater conveyance, storm drain inlet, or surface water. Refer to **Measure, Street Sweeping**. Note, mechanical sweeping of streets can create dust control issues and washing of sediment may allow sediment to reach off site inlet structures, care should be taken to avoid creating another source of sediment with this measure.

c. Proper Waste Disposal

The SESC Plan must identify potential building materials and other construction site wastes and document how these wastes will be properly managed and disposed of at the construction site. All types of waste generated at the site must be disposed of in a manner consistent with State Law and/or regulations. Refer to **Measure, Waste Management.**

d. Spill Prevention and Control

All chemicals and/or hazardous waste material must be stored properly and legally in covered areas, with containment systems constructed in or around the storage areas. Areas must be designated for materials delivery and storage. All areas where potential spills can occur and their accompanying drainage points must be described. The Applicant (Owner and Operator) must establish spill prevention and control measures to reduce the chance of spills, stop the source of spills, contain and cleanup spills, and dispose of materials contaminated by spills. Refer to **Measure, Spill Prevention and Control Plans**.

e. Control Dewatering Fluids

The SESC Plan must describe dewatering control measures that will be implemented if water must be removed from an area so that construction activity can continue.

All construction site owners and operators are prohibited from discharging ground water or accumulated stormwater that is removed from excavations, trenches, foundations, vaults, or other similar points of accumulation, unless such waters are first effectively managed by appropriate control measures. Examples of appropriate control measures include, but are not limited to, temporary sediment basins or sediment traps, sediment socks, dewatering tanks and bags, or filtration systems (e.g. bag or sand filters) that are designed to remove sediment.

At a minimum the following discharge requirements must be met for dewatering activities:

- Do not discharge visible floating solids or foam;
- To the extent feasible, utilize vegetated, upland areas[2] of the site to infiltrate dewatering fluids before discharge. In no case will surface waters be considered part of the treatment area;
- At all points where dewatering fluids are discharged utilize velocity dissipation devices such as those specified in **Section Five: Runoff Control Measures**;
- With filter backwash water, either haul it away for disposal or return it to the beginning of the treatment process;
- Replace and clean the filter media used in dewatering devices when the pressure differential equals or exceeds the manufacturer's specifications.
- Dewatering control measures must be implemented in accordance with **Measures Containment Area for Earth Materials; Portable Sediment Tanks and Bags; Pumping Settling Basins; and Pump Intake Protection**.
- Treatment chemical restrictions: If the owner and/or the operator plans to utilize polymers, flocculants, or other treatment chemicals to treat dewatering fluids, the use of such chemicals must be managed in accordance with **Appendix J, Chemical Treatment for Erosion and Sediment Control**.
- The dewatering of contaminated non-stormwater cannot be discharged without prior notice and a specific permit from the RIDEM RIPDES Permitting Program.

[2] These areas can be best identified on SESC Plans as soils that are classified as being Hydrologic Soil Groups (HSGs) A and B.

f. Establish Proper Building Material Staging Areas.

Describe construction materials expected to be stored on-site and procedures for storage of materials to minimize exposure of the materials to stormwater. Minimization of exposure is not required in cases where the exposure to precipitation and to stormwater will not result in a discharge of pollutants, or where exposure of a specific material or product poses little risk of stormwater contamination (such as final products and materials intended for outdoor use).

g. Control Discharges from Stockpiled Sediment or Soil.

Stockpile management consists of procedures and control measures designed to minimize or eliminate the discharge of stockpiled material (soil, topsoil, base material, rubble) from entering drainage systems or surface waters. For any stockpile or land clearing debris composed, in whole or in part, of sediment or soil, the following requirements apply:

- Locate the piles within the designated limits of disturbance.
- Protect from contact with stormwater (including run-on) using a temporary perimeter sediment barrier.
- Where practicable provide cover or appropriate temporary vegetative or structural stabilization to avoid direct contact with precipitation or to minimize sediment discharge.
- Never hose down or sweep soil or sediment accumulated on pavement or other impervious surfaces into any stormwater conveyance, storm drain inlet, or surface water.
- To the maximum extent practicable, contain and securely protect from wind.
- Adhere to the guidelines contained in **Stockpile and Staging Area Management**.

h. Minimize Dust

The SESC Plan must describe control measures that will be implemented to minimize the generation of dust at the construction site. Dust control procedures and control measures must be used to suppress dust on a construction site during the construction process, as applicable. Precipitation, temperature, humidity, wind velocity and direction will determine amount and frequency of applications. However, the best method of controlling dust is to prevent dust production. This can best be accomplished by limiting the amount of bare soil exposed at one time. The SESC Plan must describe dust control measures that will be implemented to control dust generation, and control measures, such as Street Sweeping, that will be implemented should dust become a pollutant. Refer to **Measures Dust Control** and **Street Sweeping**.

i. Designate Washout Areas

The SESC Plan must describe the control measures that will be used to minimize the potential for stormwater pollution from washout areas established for concrete mixers, paint, stucco, etc. Additionally, the SESC Plan must also provide recommended location(s) of washout areas, or, at a minimum, locations where washouts may <u>not</u> occur. Adhere to the guidelines contained in **Section Three: Pollution Prevention**.

j. Establish Proper Equipment/Vehicle Fueling and Maintenance Control Measures

The SESC Plan must describe equipment/vehicle fueling and maintenance control measure s that will be implemented to prevent pollutants from mixing with stormwater (e.g., secondary containment, drip pans, spill kits, etc.). Additionally, the SESC Plan must provide recommended location(s) of fueling/maintenance areas, or, at a minimum, locations where fueling/maintenance should be avoided. Refer to **Vehicle Fueling, Maintenance and Washing**.

k. Properly Use Treatment Chemicals.

If the site owner or operator intends to use polymers, flocculants, or other treatment chemicals at the construction site, the use of such chemicals must be managed in accordance with **Appendix J, Chemical Treatment for Erosion and Sediment Control.**

5. Properly Install, Inspect, and Maintain Control Measures.

a. Installation Requirements

Complete the installation of temporary erosion, runoff, sediment, and pollution prevention control measures by the time each phase of earth-disturbance has begun. All stormwater control measures must be installed in accordance with good engineering judgment, including applicable design specifications. Installation techniques and maintenance requirements may be found in this Handbook or in manufacturer specifications. Any departures from such specifications must be provided and demonstrated to reflect good engineering judgment.

b. Inspection Requirements

Minimum Frequency - Each of the following areas must be inspected by or under the supervision of the Applicant (Owner and Operator) at least once every seven (7) calendar days and within twenty-four (24) hours after any storm event which generates at least 0.25 inches of rainfall per twenty-four (24) hour period and/or after a significant amount of runoff:

- All areas that have been cleared, graded, or excavated and that have not yet completed stabilization;
- All stormwater erosion, runoff, and sediment control measures (including pollution prevention control measures) installed at the site;
- Construction material, unstabilized soil stockpiles, waste, borrow, or equipment storage, and maintenance areas that are covered by this permit and are exposed to precipitation;
- All areas where stormwater typically flows within the site, including temporary drainage ways designed to divert, convey, and/or treat stormwater;
- All points of discharge from the site;
- All locations where temporary or permanent stabilization control measures have been implemented; and
- All locations where vehicles enter or exit the site.

Qualified Personnel – The site Applicant (owner and operator) are responsible for designating personnel to conduct inspections and for ensuring that the personnel who are responsible for conducting the inspections are "qualified" to do so. A "qualified person" is a person knowledgeable in the principles and practices of erosion, runoff, sediment, and pollution prevention control, who possesses the skills to assess conditions at the construction site that could impact stormwater quality, and the skills to assess the effectiveness of any stormwater control measures selected and installed at the construction site.

Recordkeeping Requirements - All records of inspections, including records of maintenance and corrective actions must be maintained with the SESC Plan. Inspection records must include the date and time of the inspection, and the inspector's name, signature, and contact information.

Reductions in Inspection Frequency - If earth-disturbing activities are suspended due to frozen conditions, inspections may be reduced to a frequency of once per month. The Applicant (Owner and Operator) must document the beginning and ending dates of these periods in the SESC Plan.

c. Maintenance Requirements

Site owners and operators must ensure that all erosion, runoff, sediment, and pollution prevention control measures remain in effective operating condition and are protected from activities that would reduce their effectiveness. Site owners and operators must ensure that all erosion, runoff, sediment, and pollution prevention control measures are inspected at the frequency established in Section 5.b (above). If the designated site inspector finds a problem (i.e. erosion, runoff, sediment or pollution prevention control measures require replacement, repair, or maintenance), the Applicant (Owner and Operator) must ensure that the necessary repairs or modifications are made in accordance with the following:

- Initiate work to fix the problem immediately after discovering the problem, and complete such work by the close of the next workday, if the problem does not require significant repair or replacement, or if the problem can be corrected through routine maintenance.

- When installation of a new control or a significant repair is needed, site owners and operators must ensure that the new or modified control measure is installed and made operational by no later than seven (7) calendar days from the time of discovery where feasible. If it is infeasible to complete the installation or repair within seven (7) calendar days, the reasons why it is infeasible must be documented in the SESC Plan along with the schedule for installing the stormwater control(s) and making it operational as soon as practicable after the 7-day timeframe.

- If corrective actions are required, the site Applicant (owner and operator) must ensure that all corrective actions are documented on the inspection report in which the problem was first discovered. Corrective actions shall be documented, signed, and dated by the site operator once all necessary repairs have been completed.

6. Completing the Project and Final Stabilization

The SESC Plan must include a description, including specifications, of how the site will be permanently stabilized after construction is completed.

Permanent stabilization control measures must be initiated as soon as practicable in portions of the site where construction activities have ceased, but in no case more than 14 days after the construction activity has ceased.

Final stabilization of an area may occur at any time during the construction project.

Once an area has acceptable final stabilization control measures in place, routine inspections in these stabilized areas may be able to be stopped, however these completed areas should be periodically inspected for the rest of the construction project to ensure stabilization is complete and permanent.

FINAL PROJECT CLOSE-OUT CHECKLIST:

- Remove all construction debris and trash.
- Remove temporary control measures (i.e. synthetic erosion control products); remove residual sediment as necessary and seed/mulch any bare spots; **some** control measures that decompose may be left in place.
- Verify soil depth and quality.
- Ensure that a uniform acceptable stand of turf or other vegetation is present for vegetated stabilization measures.
- Repair any remaining signs of erosion.
- Ensure that permanent post-construction control measures are in place, repaired where necessary, and operational. Provide written maintenance requirements for all post-construction control measures to the appropriate party.
- Check all drainage conveyances and outlets to ensure they were installed correctly and are operational. Inspect inlet areas to ensure complete stabilization and remove any brush or debris that could clog inlets. Ensure banks and ditch bottoms are well vegetated. Reseed bare areas and replace rock that has become dislodged.
- Stabilize any areas where runoff flows might converge or high velocity flows are expected.
- Remove temporary stream crossings; grade, seed, or re-plant vegetation damaged or removed.
- Ensure subcontractors have repaired their work areas before final closeout.
- Notify State and Local permitting agencies that the site is properly stabilized and construction activities that disturb or expose soils have ceased.

Soil Erosion and Sediment Control Plan Format

A site specific Soil Erosion and Sediment Control Plan should include a written portion known as a *narrative* and an illustrative portion containing drawings typically referred to as *site plans*.

NARRATIVE

The narrative is a written document that explains the potential for soil erosion on a specific construction site, the decisions made in selecting control measures, and the justification for those decisions. The narrative should describe how the SESC Plan addresses the Performance Criteria described previously. The narrative is especially important to the plan reviewing authority because it contains concise information concerning existing site conditions, construction schedules, and other pertinent items which are not contained on a typical site plan. Since plan reviewers cannot always discuss the project at length with the site planner, plan reviewers must be provided with adequate information to complete their review of the SESC Plan. The narrative is also important to the site owner, the on-site construction site operator, and the designated site inspector who are responsible to see that the SESC Plan is implemented properly. It provides them with a single document which describes where and when the various soil erosion and sediment control measures should be installed, maintained, inspected, and either removed or otherwise managed if retained as part of the permanent stormwater management plan when the site is fully and permanently stabilized.

The installation and maintenance requirements, including the planned start and completion dates of construction activities, inspection schedules, and temporary control measures should be included in the narrative. The narrative will identify the responsible parties for installation and maintenance and the requirements for removal of temporary control measures and establishment of permanent control measures.

SITE PLANS

The site plan contains construction drawings that visually illustrate the site features including a **site constraint map (see Appendix F)**, existing conditions and proposed alterations. The construction drawings are important because they show the locations and dimensional details of the control measures. This information is needed by the reviewer to ensure that appropriate control measures are included. Construction site operators and building contractors need the drawings to ensure that control measures are properly installed according to the construction sequence specified in the narrative.

Site plans must depict all of the control measures specified in the SESC Plan. Depending on the complexity, the SESC Plan may reference the complete construction plan set, and/or may have a specific SESC Plan set developed. The SESC Plan should indicate the plan type (General, Drainage & Utility, SESC Plan, etc.) and sheet numbers where the following required information can be found:

- Title & Date of Plan Set(s);
- Total Project Area, including all grading and/or excavation, and a defined Limit of Disturbance;
- Pre- and post-development drainage patterns;

- The location and name of the receiving waters and/or separate storm sewer system and the ultimate receiving waters that may be impacted during construction;
- Natural features map showing location of environmentally sensitive features, constraints to development, and areas to be preserved and/or protected;
- Location of all existing and proposed impervious structures;
- Locations of infiltrating post construction stormwater treatment and control measures, OWTS leach field areas, and prohibited traffic areas;
- Locations of potential sources of pollution that may reasonably be expected to affect the quality of stormwater discharges from the site (i.e. exposed, un-stabilized soil stockpiles and construction material and waste collection areas);
- Locations and timing of stabilization control measures including phased clearing and grubbing based on scheduled activities;
- The location of all erosion, runoff, sediment, and pollution prevention control measures;
- The location of all erosion, runoff, and sediment control structures, including the location of temporary sediment basins, diversions, or other water quality, peak discharge, and volume control structures;
- Locations where stormwater discharges to a surface water or wetland;
- Areas within the project limits that are suitable for material and equipment storage, designated concrete washout collection, dumpsters, stockpiles, fueling, etc. including specific locations where these activities will or will not occur; and
- The location of spill prevention and response equipment.

Part E. Construction Phasing and Sequencing

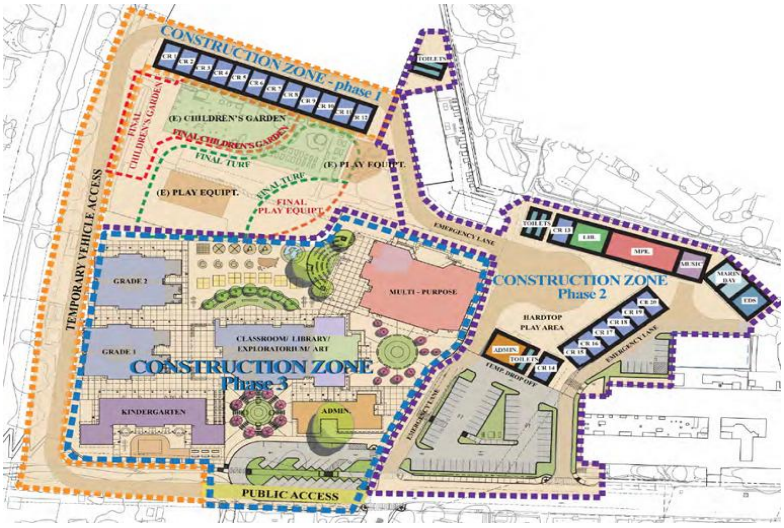

(Photo Credit: Douglas County, CO)

Definition

- Construction site <u>phasing</u> involves disturbing only part of a site at a time to prevent erosion from dormant parts. Earth-disturbing activities and construction are completed and soils are effectively stabilized on one part of the site before grading and construction commence at another part.

  For example, a 100 unit condominium complex may be broken into several phases: the first phase involving the construction of a portion of the primary access road, a detention basin, two buildings containing 20 units and borrowing fill materials from the final phase building site; a second phase involving the extension of the primary access road, recreational facilities and six buildings containing 60 condominium units; and a final phase to complete the primary access road and two buildings containing the last 20 units.
- Construction <u>sequencing</u> is a specified work schedule that coordinates the timing of land-disturbing activities and the installation of erosion and sediment control measures.

Purpose

- The goal of a construction sequence schedule is to reduce on-site erosion and off-site sedimentation by performing earth-disturbing activities and installing erosion and sediment control measures in accordance with a planned schedule.

Applicability

- Phasing is encouraged for large construction sites, with each phase containing its own construction sequence.
- Sites where land disturbances might affect water quality in a receiving body of water.

> **<u>Note</u>**: Weather and other unpredictable variables might affect construction sequence schedules. The SESC plan should plainly state the proposed schedule and a protocol for making changes due to unforeseen problems.

Planning Considerations

Early Planning of Phasing and Sequencing

To be effective, construction site phasing needs to be incorporated into the overall site plan early on. Elements to consider when phasing construction activities include the following.

- Not performing all site-disturbing activities at once
- The coordination of cuts and fills to minimize the movement and storage of soils on, off, and around the site
- Managing runoff separately in each phase
- Determining whether water and sewer connections and extensions can be accommodated
- Determining the fate of already completed downhill phases
- Providing separate construction and residential accesses to prevent conflicts between residents living in completed stages of the site and construction equipment working on later stages (USEPA, 2004).

Construction sequencing schedules should, at a minimum, include the following.

- Design and installation criteria
- The erosion and sediment control measures that are to be installed
- Principal development activities
- Which measures should be installed before other activities are started
- Compatibility with the general contract construction schedule

Important Definitions

Construction phasing and sequencing must identify temporary and permanent soil stabilization of earth-disturbing activities. Following are a few key definitions.

- Earth-disturbing activities are considered to have permanently ceased when clearing and excavation within any area of the construction site that will not include permanent structures has been completed.
- Earth-disturbing activities are considered to have temporarily ceased when clearing, grading, and excavation within the site will not resume (i.e., the land will be idle) for a period of 14 or more calendar days, but such activities will resume in the future.[3]
- For the purposes of complying with the soil stabilization requirements established in **Soil Erosion and Sediment Control Plans,** any of the following types of activities will constitute the initiation of stabilization. This list of examples is not exhaustive.
    - Prepping the soil for vegetative or non-vegetative stabilization
    - Applying mulch or other non-vegetative product to the exposed area
    - Seeding or planting the exposed area
    - Starting any of the activities listed above on a portion of the area to be stabilized, but not on the entire area

[3] The 14-calendar day timeframe begins as soon as it is known that work on a portion of a site will be temporarily ceased. In circumstances of unplanned or unanticipated delays due to circumstances beyond operator's control (e.g., problems with labor, funding, or weather) when the operator does not know how long the work stoppage will last, the requirement to initiate stabilization is triggered as soon as it is known with reasonable certainty that work will be stopped for at least 14 calendar days.

- Finalizing arrangements to have a stabilization product fully installed in compliance with the applicable deadline for completing stabilization as established within this chapter. The term "immediately" is used to define the deadline for initiating stabilization measures. In the context of this provision, "immediately" means as soon as practicable, but no later than the end of the next work day, following the day when the earth-disturbing activities have temporarily or permanently ceased.

Critical Path Management (CPM)

A useful tool in site planning and managements is the Critical Path Method (CPM). CPM is based on the concept of the f low and interdependency of activities and work products. CPM helps engineers, planners, contractors and others better plan and implement all tasks that must be completed as part of a project. CPM is both a graphical and logic based planning tool that employs a diagram of activities.

CPM acts as the basis for schedule preparation and resource planning for small or large projects. CPM allows for the monitoring of project events and critical phases to ensure the site is properly protected. CPM helps site inspectors, contractors and others to see where remedial action might be needed to keep a project on course. The CPM planning process is similar to 'contingency planning', trying to decide what could go wrong and fixing things so that they don't go wrong or at least being prepared if they do.

To see an example of CPM being employed, visit the web site at:
http://www.home-building-answers.com/critical-path-method.html.

Figure 1. Example of Project Management Tool (Gantt Diagram) in Microsoft Project

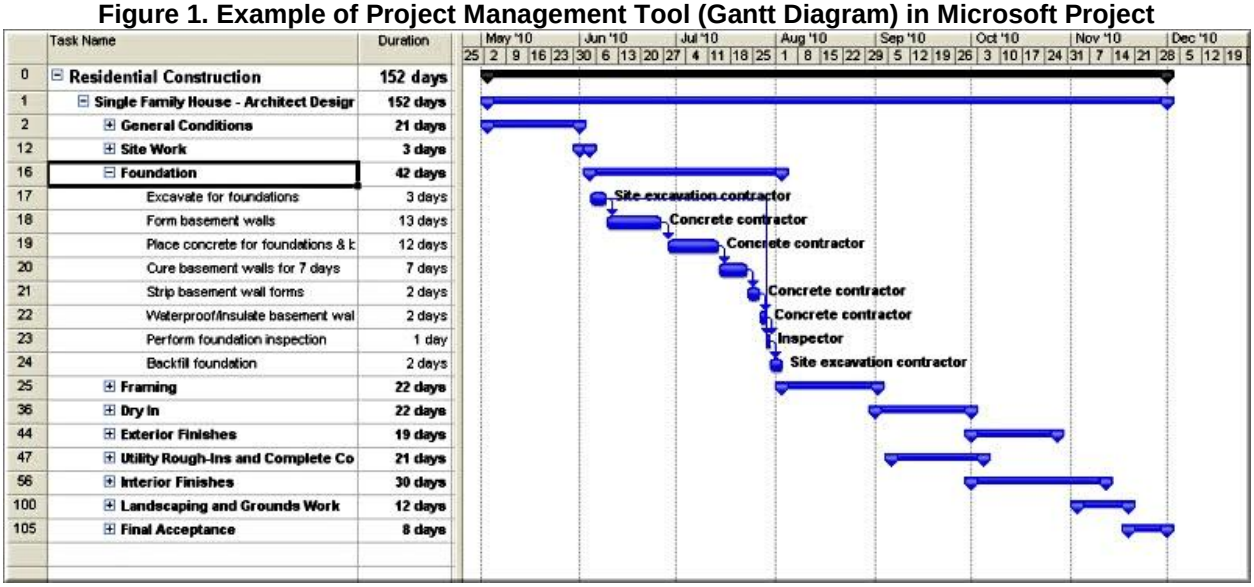

Implementation Requirements

Follow the construction sequence throughout the project and modify the written plan before any changes in construction activities are executed. Update the plan if a site inspection indicates the need for additional erosion and sediment control.

Coordinating Cuts and Fills

A key consideration of grading activities should be the coordination of cuts and fills to: (1) Minimize the movement and storage of soils on, off, and around the site, and (2) Avoid performing all site-disturbing activities at once, leaving portions of the disturbed site vulnerable to erosion.

Initiating and Maintaining Stabilization Measures

Upon completion and acceptance of site preparation and initial installation of erosion and sediment controls the operator will initiate appropriate stabilization measures during all phases of construction on all disturbed areas as soon as possible but not more than fourteen (14) days after the construction activity in that area has temporarily or permanently ceased.

Any disturbed areas that will not have construction activity occurring for a period of time greater than fourteen (14) days must be stabilized using the stabilization measures specified in the SESC Plan which comply with **Section Four: Erosion Control Measures**. For earth-disturbing activities a site is considered adequately stabilized when the following criteria below are met.

Vegetative Stabilization

- For all sites, except those located on agricultural lands.
  - If stabilizing any exposed portion of the site through the use of seed or planted vegetation, operator must provide established uniform vegetation (e.g., evenly distributed without large bare areas), which provides 70 percent or more of the density of ground coverage. Avoid the use of invasive species in seed mixture and mulch materials;
  - For final stabilization, all areas within the limits of disturbance to be seeded or planted must be decompacted and topsoiled in accordance with **Soil Preparation and Topsoiling,** and vegetative cover must be perennial; and
  - Immediately after seeding or planting the area to be vegetatively stabilized, select, design, and install non-vegetative erosion controls that provide cover (e.g., mulch, rolled erosion control products), to the extent necessary to prevent erosion while vegetation is becoming established.
- For sites located on land used for agriculture. Disturbed areas on land used for agricultural purposes (e.g., pipelines across crop or range land, staging areas for highway construction) that are restored to their pre- construction agricultural use are not subject to these final stabilization criteria. Areas disturbed that were not previously used for agricultural activities, and areas that are not being returned to preconstruction agricultural use, must meet the conditions for stabilization in this Part**.**

Non-Vegetative Stabilization

- If using non-vegetative controls to stabilize exposed portions of the site, or if using such controls to temporarily protect areas that are being vegetatively stabilized, the operator must provide effective non-vegetative cover to stabilize any such exposed portions of the site.

Inspection, Maintenance, and Removal Requirements

Update the plan if a site inspection indicates the need for additional soil erosion and sediment control measures.

SECTION THREE: POLLUTION PREVENTION AND GOOD HOUSEKEEPING

(Photo Credit: RI DOT)

Minimizing Disturbed Area: Preserving Soils & Vegetation ..... (1 - 6)
Protecting Vegetated Buffers ..... (1 - 8)
Limit of Work and Site Access Control ..... (1 - 2)
Tree Protection ..... (1 - 5)
Dust Control ..... (1 - 2)
Spill Prevention and Control Plans ..... (1 - 3)
Stockpile and Staging Area Management ..... (1 - 3)
Street Sweeping ..... (1 - 2)
Waste Management ..... (1 - 3)
Concrete Washout ..... (1 - 6)
Vehicle Fueling, Maintenance and Washing ..... (1 - 3)

Minimizing Disturbed Area: Preserving Soils & Vegetation

(Photo Credit: Montgomery County)

Definition

Maintaining maximum areas of mature vegetation and undisturbed soils on a construction site and at the individual lot level, through the reduction of site clearing, grubbing, and grading, and the maximization of vegetation preservation. This is accomplished through the following.

- Careful site planning addressing: sensitive areas; proposed roads, utilities and other infrastructure; building locations and elevations (to best fit the existing topography); and landscape plans.
- Construction phasing and sequencing **(see Construction Phasing and Sequencing)**.
- Careful delineation of limits of work **(see Limit of Work and Site Access Control).**

Purpose

- To protect and avoid sensitive, vulnerable, and/or high value resource areas.
- To preserve and protect existing trees, shrubs, vines, and herbaceous plants from impact or damage during construction activities.
- To reduce the need for erosion control measures, and reduce stormwater runoff by protecting existing vegetation.
- To reduce sediment and pollutant loading through biofiltration.
- To eliminate the need for re-establishment of a new maintained landscape (i.e., turf and landscape plantings) for the site or individual lots.
- To provide wildlife habitat, aesthetics, and visual screening.
- To reduce long-term site maintenance requirements.

Applicability

- All construction sites with land disturbances having the potential to contribute sediment or other stormwater pollutants to sensitive habitats or water resources, on sloped sites, above disturbed areas, and on infill development projects where screening may be necessary or required.

Planning Considerations

Delineating Sensitive, Vulnerable, or High-Value Resources

The first step is to identify and delineate in the field those sensitive, vulnerable, or high value areas. These areas must be identified early in project planning, and appropriately flagged, mapped, and protected. Special consideration should be given to:

- Preserving sensitive, vulnerable, and/or high value areas.
- Preserving healthy stands of existing non-invasive vegetation in stable soils.
- Maintaining connectivity of habitats.
- Protecting intact high value habitats and limiting fragmentation and exposure (to, e.g., sun, edge effects, and wind effects).
- Avoiding steep slopes, erodible soils, waterways and drainage areas.

Creating a Constraints Map

During the initial conceptual design phase of a land development project, the project design engineer should provide the information on sensitive, vulnerable, or high value areas, ideally through development of a Constraint Map to be included in the site plan.

Supporting Stormwater Management

Minimizing disturbed areas and maximizing protection of natural vegetation (e.g., meadow, woodlands) supports stormwater management, by reducing stormwater runoff, and providing treatment options for stormwater generated elsewhere on the site. Employing strategies that direct non-erosive sheet flow onto naturally vegetated areas can allow considerable infiltration to occur. It can be coupled with level spreading devices (see **Outlet Protection**) and other SESC measures to more actively manage stormwater flows that cannot be avoided in several ways.

- Reduced volume of runoff results from increased infiltration and increased evapotranspiration. Undisturbed areas of existing vegetation allow more infiltration to occur, especially during smaller storm events.
- Reduced peak discharge occurs as a result of lower runoff coefficients, higher infiltration rates, longer times of travel, and slower velocities of runoff through vegetated areas.
- Increased on-site storage is facilitated through the preservation of vegetated areas.
- Water quality improvements result from the reduction in construction-phase sediment-laden runoff and from the reduction in the need for post-construction maintenance o f newly landscaped areas. Minimizing total disturbed area provides opportunities for the filtration, infiltration, and thermal mitigation of stormwater generated elsewhere on the development site.

Design and Installation Requirements

Minimize Disturbance at the Site

Once sensitive, vulnerable, and/or high value resource areas have been identified on a given development parcel, consider ways to minimize disturbance, grading, earthwork, and maintenance.

If state and/or local municipalities have established Minimum Disturbance/Minimum Maintenance Buffers, ensure that the site is designed to be rigorous but reasonable in terms of current feasible site construction measures. These standards may need to vary with the type of development being proposed and the context of that development (the required disturbance zone around a low

density single-family home can be expected to be less than disturbance necessary for a large commercial structure), given the necessity for use of different types of construction equipment and the realities of different site conditions. For example, the U.S. Green Building Council's Leadership in Energy & Environmental Design Reference Guide (Version 2.0 June 2001) specifies the following:

> **"**…limit site disturbance including earthwork and clearing of vegetation to 40 feet beyond the building perimeter, 5 feet beyond the primary roadway curbs, walkways, and main utility branch trenches, and 25 feet beyond pervious paving areas that require additional staging areas in order to limit compaction in the paved area…"

Reduction of site disturbance by grading can be accomplished in several ways, including clustering.

Clustering and Concentration of Uses

Clustering of structures and infrastructure and the concentration of uses:

- Reduces the need for grading, reduces disturbance, and promotes the integration of site design with nature features and topography **(Figure 1-1)**. This allows the preservation of the natural landscape and natural vegetative cover and the protection of sensitive areas including, but not limited to, wetlands, open space and agricultural lands.
- Reduces total impervious area (streets and driveways). This results in reduced volumes and peak rates of flow of stormwater being generated, thereby increasing infiltration, limiting non-point source pollution, and limiting the costs and complexity of stormwater management required.

Conservation developments may also employ increased vertical development, further reducing net site roof impervious area while holding the number of units and amount of square footage constant. Density bonuses, if employed, should be scrutinized to make sure that any additional density allowed is balanced by additional open space preservation.

Improving Roadway Design

The requirements of grading for roadway alignment (curvature) and roadway slope (grade) frequently increase site disturbance throughout a development site and on individual lots. The layout and design of internal roadways on a land development site with significant topographic variation (slope) can result in extensive earthwork and vegetation removal (i.e., grading). Far less grading and a far less disruptive site design can be accomplished if the site design is made to better conform with the existing topography and land surface, where road alignments strive to follow existing contours as much as possible, varying the grade and alignment criteria as necessary to comply with safety limits. Site roadway design criteria should be made flexible in order to better fit a given parcel and achieve a more "fluid" roadway alignment. The avoidance of sensitive site features, such as important woodlands, wetlands, steep slopes, well recharge areas and critical habitats may be facilitated through flexible roadway layout.

Figure 1. Conventional Development at the Neighborhood Scale.

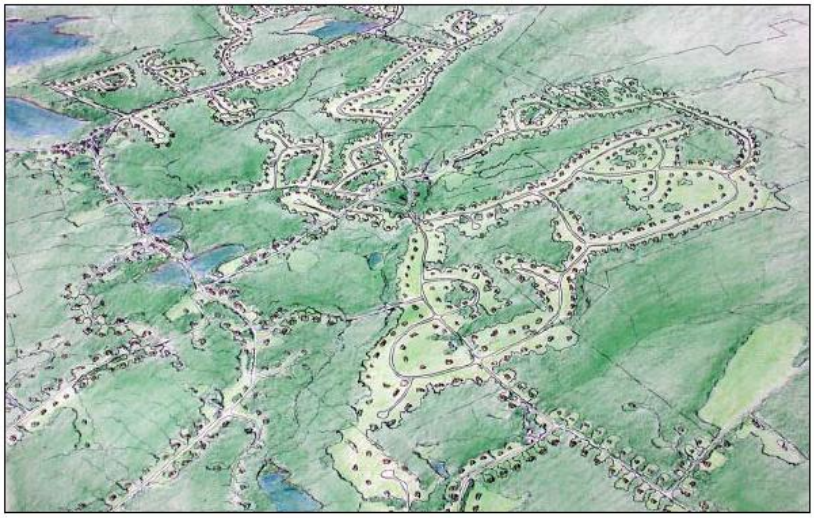

(Credit: *2003 Rhode Island's Conservation Development Manual*)

Figure 1 shows the same rural area after development under conventional two-acre zoning. Most of the farmland – often the easiest land to build on – is developed first, along with existing road frontage. While large areas of wetlands and land already protected remain undeveloped, the new subdivisions and roadside frontage lots fragment wildlife habitat and replace rural vistas with suburban house lots. Meanwhile, the lack of two-acre lots in existing village centers brings growth to a halt in the places most suited to community life. The result is a landscape where existing natural and cultural resources are replaced by single-family house lots, with a resulting loss of rural character and quality of life.

Figure 2. Conservation Development at the Neighborhood Scale.

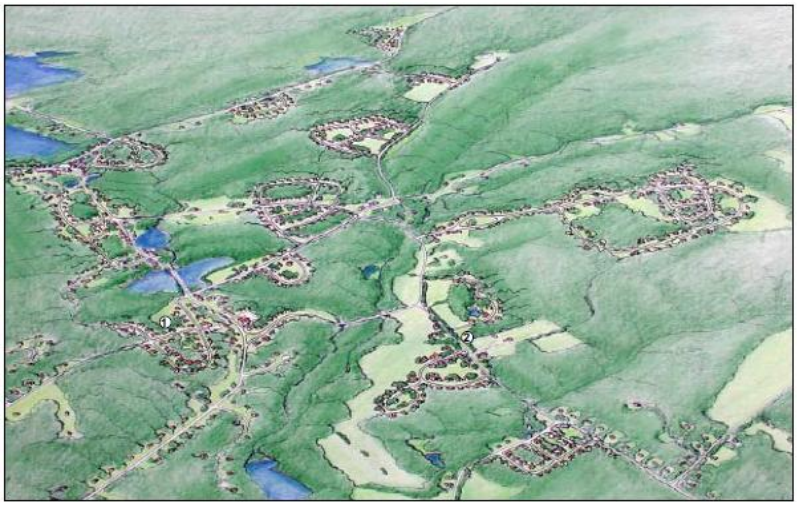

(Credit: *2003 Rhode Island's Conservation Development Manual*)

Figure 2 shows a creative approach to development of the area, using the Conservation Development process to build the same number of new homes allowed by current zoning in a pattern shaped by existing networks of natural and cultural resources. Development of parcels adjoining existing village centers is laid out as an extension of the existing village: streets and sidewalks are connected, lot sizes and set backs are based on the existing neighborhood, and open space is protected at the periphery to create a permanent greenbelt. In more rural areas, new homes are tucked into the edges of meadows or woods, or gathered into small hamlets designed according to local traditions of building walkable, livable communities. Open space is consolidated to buffer wetlands and sensitive stream corridors, and scenic roadside farmland is protected. Large tracts of protected forest are extended and connected to maintain movement corridors for wildlife and recreation.

Note: For further information please refer to:
http://www.dem.ri.gov/programs/bpoladm/suswshed/pubs.htm

Minimizing Construction Traffic Areas

Areas where temporary construction traffic is allowed should be clearly delineated and limited. These areas should be restored as pervious areas following development through a required soil restoration program (see **Soil Preparation and Topsoiling**).

Minimizing Stockpiling and Storage Areas

All areas used for materials storage during construction should be clearly delineated (see Site Access Control) with the surface maintained, and subject to a soil restoration program following development (see **Soil Preparation and Topsoiling**). For low-density developments, the common measure of topsoil stripping might be unnecessary and should be minimized, if not avoided.

Minimizing Clearing for New Landscape Plantings

Such a strategy reduces soil disturbance and associated problems of erosion and sedimentation, reduces costs of landscape installation, and costs of landscape maintenance.

Maximizing Soil Restoration

Where construction activity does require grading and filling and where compaction of soil can be expected, this disturbance should be limited. Soil treatments/amendments should be considered for such disturbed areas to restore permeability (see **Soil Preparation and Topsoiling**). If the bulk density is not reduced following fill, these areas will be considered semi-impervious after development and runoff volumes should be calculated accordingly.

Materials

See **Limit of Work and Site Access Control and Soil Preparation and Topsoiling** for materials and methods.

Limits of Work

Once the areas to be developed for this lower impact development project have been mapped, limits of work to allow the construction in those areas can be identified. Limits of work must be submitted to the state and/or local jurisdiction for review/approval, clearly defined on plans (use Constraint Map), and flagged/staked in the field (**Limit of Work and Site Access Control**) prior to commencement of work and site clearing. Limits of work must be identified and installed in a manner that will ensure long-term protection of the natural resources. When installing Limits of Work, be sure to encompass the entire root zone of the outer-most vegetation to be preserved (i.e., the drip line of the outermost branches). **See Tree Protection.**

Clearing and grubbing

Clearing and grubbing should be minimized and should occur only after limits of work (both interior and perimeter) have been installed.

Timing Requirements

Only areas that can be reasonably expected to have active construction within 21-days will be cleared/grubbed. It is NOT acceptable to clear and grub areas that will not be active within 21-days unless stabilized with an approved stabilization measure immediately following clearing and grubbing.

Clearing/Grubbing shall not take place during a rain event in which greater than 0.25 inches of rain is expected within a 24 hour period if erosion is likely to occur as a result; nor shall it occur if a rain event in which greater than 0.25 inches of rain within a 24 hour period is forecasted during the time period planned for any site disturbance and appropriate erosion controls cannot be installed prior to the storm and in accordance with appropriate measure specifications.

No undisturbed areas will be cleared of existing vegetation after October 15th of any calendar year or during any period of full or limited winter shutdown. All disturbed soils exposed prior to October 15 of any calendar year will be seeded or protected by that date. Any such areas that do not have adequate vegetative stabilization, as determined by the resident engineer or environmental inspector, by November 15 of any calendar year, must be stabilized through the use of erosion control blankets or straw mulch, in accordance with specifications contained within the measure. If work continues within any of these areas during the period from October 15 through April 15, care must be taken to ensure that only the area required for that Day's work is exposed, and all erodible soil must be destabilized within 5 working days.

After clearing, and by the end of each day's grubbing operation, the Contractor or responsible person will install erosion control measures that are indicated on the Plans or as directed by the Engineer. Such erosion control measures will be installed in strict accordance with the requirements of any approved measures.

Inspection, Maintenance, and Removal Requirements

Routinely inspect no-disturbance areas and protected areas to ensure that they are flagged, protected, and healthy. Re-delineate and protect as necessary.

Remove measures only once all construction has ceased and the entire site is stable.

Protecting Vegetated Buffers

(Photo Credit: Costal Waccamaw)

Definition

- Preserving and enhancing an area of existing and established trees, shrubs, vines, grass and other perennial plants adjacent to a body of water or other sensitive area.

Purpose

Buffer preservation may be used in lieu of other sediment control measures to achieve desired or required sediment reduction.

Buffers:

- Provide a transition between and create a "buffer" between development and aquatic environments;
- Maintain the hydrologic, hydraulic, and ecological integrity of wetlands, stream channels and shorelines and to provide wildlife habitat, aesthetics, and visual screening;
- Provide erosion control and reduce stormwater runoff (and associated sediment and pollutant loading) by protecting the soil surface from the impact of raindrops, holding soil particles in place, and maintaining the soil's capacity to absorb water and promote infiltration and biofiltration; and
- Maintain a stable construction site in the most cost-effective way, reduce the need for erosion control measures, and reduce long-term site maintenance requirements.

Note: Buffers can provide suspended sediment reduction, but are not for the control of large-grain sediments or heavy pollutant loads. Buffers, therefore, may need to be protected with "pre-treatment" Best Management Measures.

Applicability

- All construction sites with disturbances having the potential to contribute sediment or other stormwater pollutants to surface waters and fresh water and coastal wetlands.

Planning Considerations

Buffers serve many functions:

- Slow water runoff and enhance infiltration;
- Trap pollutants in surface runoff;
- Trap pollutants in subsurface flow;
- Stabilize soil; and
- Reduce bank erosion.

Sediment is the pollutant most effectively removed from runoff by buffers. Coarse-textured sediments will drop out first while finer particles will require wider buffers to be removed. Buffers for sediment trapping should only be used as a final defense. Soils first need to be kept in place as much as possible with sediment and erosion control best management measures.

Water quality goals may not be achieved solely through the preservation of buffers alone. Manage adjacent land development activities and land uses for better water quality by:

- Managing land to reduce runoff and increase infiltration;
- Maintaining vegetative cover as much as possible;
- Avoiding potentially polluting activities on areas most prone to generating significant runoff;
- Minimizing potentially polluting activities during times of year most prone to generating runoff; and
- Using a system of upland buffers to reduce runoff and pollutant load to riparian buffers.

Buffers should be located as close as possible to the pollution source and should be placed along the contour to promote shallow flow across the buffer. If the contour is not closely followed, a buffer may increase concentration of runoff flow and reduce buffer effectiveness.

Design and Installation Requirements

Delineate Wetlands in the Field

In the field, early in the project planning process, identify and delineate all wetland areas to be protected, enhanced, and/or restored. Give careful consideration to preserving:

- Healthy stands of native vegetation and stable soils;
- Sensitive, vulnerable, and/or high value areas;
- Connectivity of habitats;
- Limiting fragmentation and exposure (to, e.g., sun, edge effects, and wind effects); and
- Waterways and drainage patterns.

Identify Wetlands on the Site Plan and Constraints Map

Identify all flagged wetlands (and other site constraints) on the Site Plan and Constraints Map.

(See **Appendix F: Site Constraint Maps** for more information.)

Appropriate Buffer Widths Vary with Site Conditions

At any given site, the level of pollutant removal from surface runoff depends primarily on buffer width, but adjustments must be made for slope, soil texture, size of disturbed area, and soil surface condition.

Buffers may have a fixed width where uniform runoff occurs (**Figure 1, A**). However, runoff is often non-uniform and flow is either diverging or converging due to topography, and a fixed-width buffer will be less effective in such situations (**Figure 1, B**). Instead, runoff areas and corresponding buffer locations to which the flow should be mapped (**Figure 1, C**) and buffer width should vary based on anticipated runoff loads and site conditions (**Figure 1, D**). Buffers will need to be wider for upslope runoff areas that are larger and contribute greater loads.

Figure 1. Runoff Patterns with Varying Topography

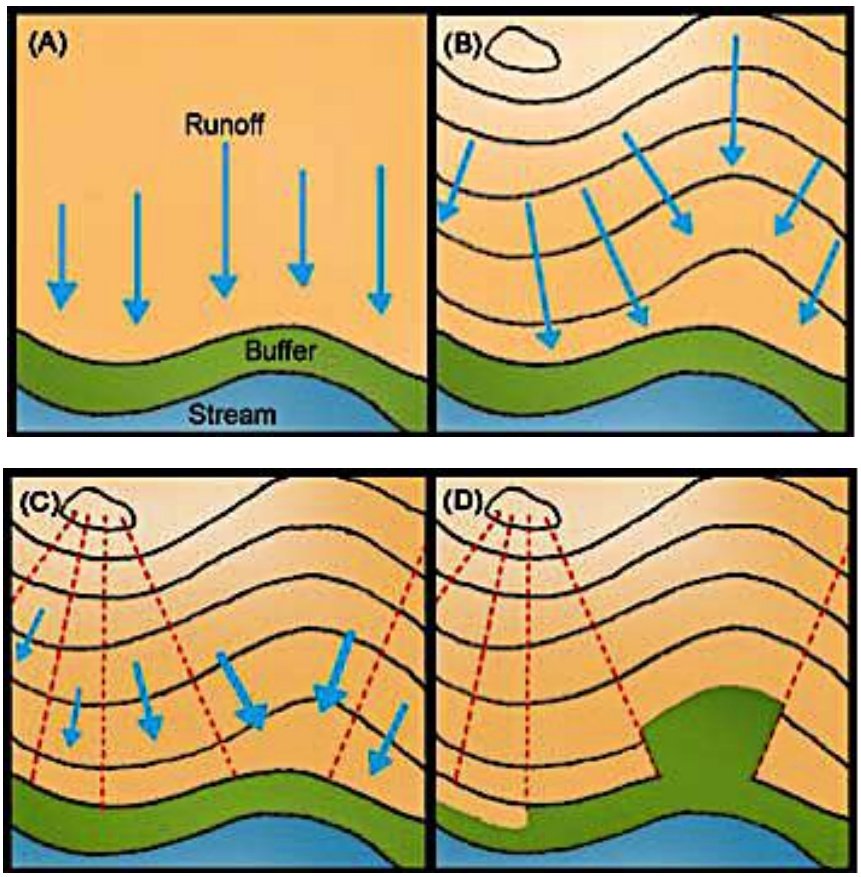

(Credit: USDA, NRCS)

Determining an Appropriate Buffer Width: A Simple Tool

A "rule of thumb" tool has been developed using several readily identifiable factors (**Figure 2**). Since the tool was developed for agricultural applications, the terms warrant some explanation.

- "Field length" is equivalent to width of disturbed construction site up-gradient of the buffer
- "Buffer width" is the width of a mature, fully vegetated buffer up-gradient of a sensitive area or wetland resource area.
- "Pollutant type" includes not only sediment, but other associated pollutants
- "Surface soil condition (C-factor)" is the cover-management factor. It represents the effects of vegetation, management, and erosion-control measures on erosion. It will be 1.0 for most construction sites in Rhode Island.
- "Slope" is the average slope of the contributing drainage area (to the portion of the buffer to be analyzed (see **Figure 1,D**, to determine appropriate contributing drainage areas). It is represented as a percent slope.
- "Soil texture" is a qualitative classification based on the soil's physical 'textural feel' that can be further clarified by separating the relative proportions of sand, silt and clay using grading sieves. Much of Rhode Island's soils are classified in as silt loams to fine sandy loams.

More information on site-specific soils in Rhode Island can be found at the Web Soil Survey at: http://websoilsurvey.nrcs.usda.gov/app/.

Figure 2. Buffer Width Design Tool Components

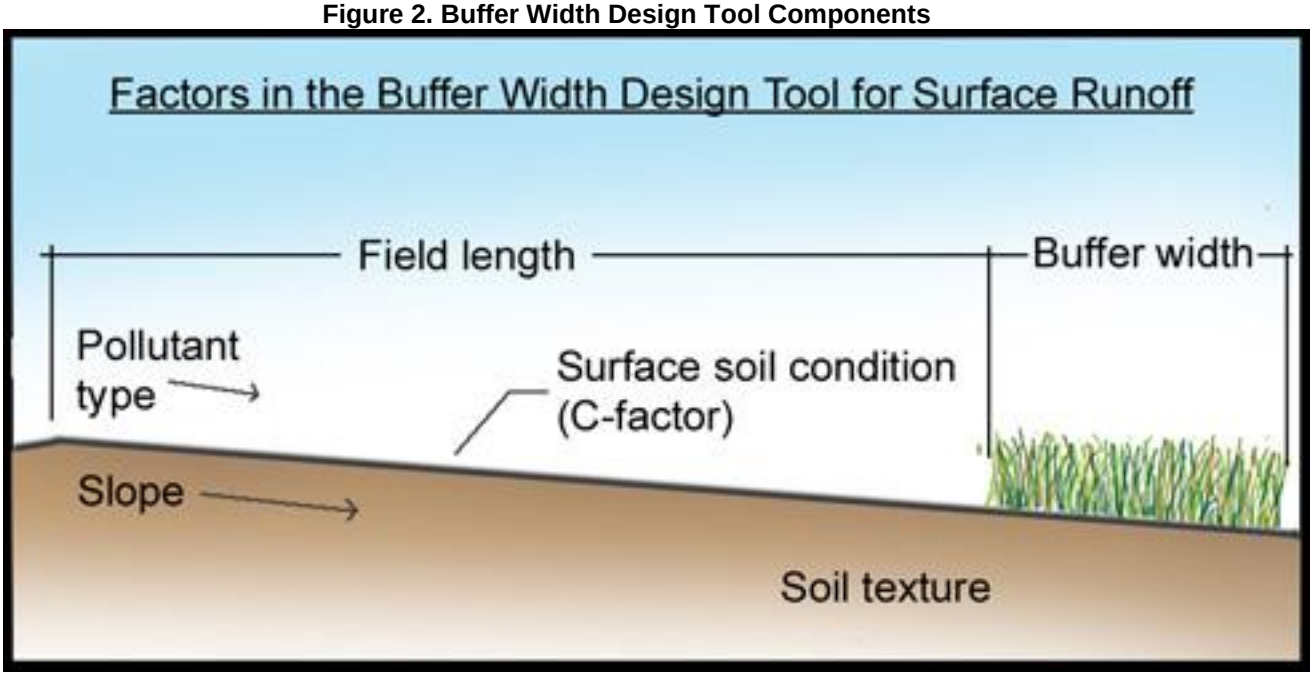

(Credit: USDA, NRCS)

The table (**Figure 3**) and graph (**Figure 4**) on the following pages can be used together as a tool to estimate a buffer width that will achieve a desired level of pollutant removal. The tool is designed to quickly generate estimates of design width for a broad range of site conditions. The tool can be used for sediment, sediment-bound pollutants and dissolved pollutants.

This tool was originally developed for agricultural runoff but can be applied to construction sites as well. The tool was developed using a complex mathematical model of buffer processes called Vegetative Filter Strip Model (VSFMOD). It computes runoff loads of water and sediment from agricultural fields and their deposition and infiltration within buffers. Using the model, trapping efficiencies for sediment and water were estimated for a range of buffer widths and different combinations of slope, soil texture, field C-factor, and field length that are common in agricultural fields. Other site conditions were held constant. For more information, refer to Dosskey and others (2008). This tool does not account for long-term sediment accumulation or long-term fate of dissolved pollutants. These limitations should remind users that the estimated trapping efficiencies are only rough estimates and may decrease over time.

Follow these steps to determine a total buffer width necessary to achieve a desired level of sediment reduction.

- Identify the characteristics of your site (as shown in **Figure 3**).
- Identify the line (1-7) in **Figure 4** that most closely resembles your site. (This will be adjusted in the next step).

Figure 3. Conditions Corresponding to Each Line in Figure 3

Line Number	Field Length (feet)	C-Factor[1]	Slope (%)	Soil Texture[2]	Pollutant Type
7	650	0.5	2	FSL	Sediment
6	650	0.15	2	SiCL	Sediment
5	650	0.5	2	SiCL	Sediment
4	1300	0.5	2	SiCL	Sediment
3	1300	0.5	2	FSL	Dissolved
2	650	0.5	10	SiCL	Sediment
1	1300	0.5	2	SiCL	Dissolved

1. C-Factor of 0.5 represents plowed and disked row crops with moderate residue returned to the soil surface. C-Factor of 0.15 represents conservation tillage and no till with high residue returned to the soil.

2. FSL = Fine Sandy Loam; SiCL = Silty Clay Loam

(Credit: *2002 Connecticut Guidelines for Soil Erosion and Sediment Control*)

Figure 4. Buffer Efficiencies based on Site Characteristics and Width

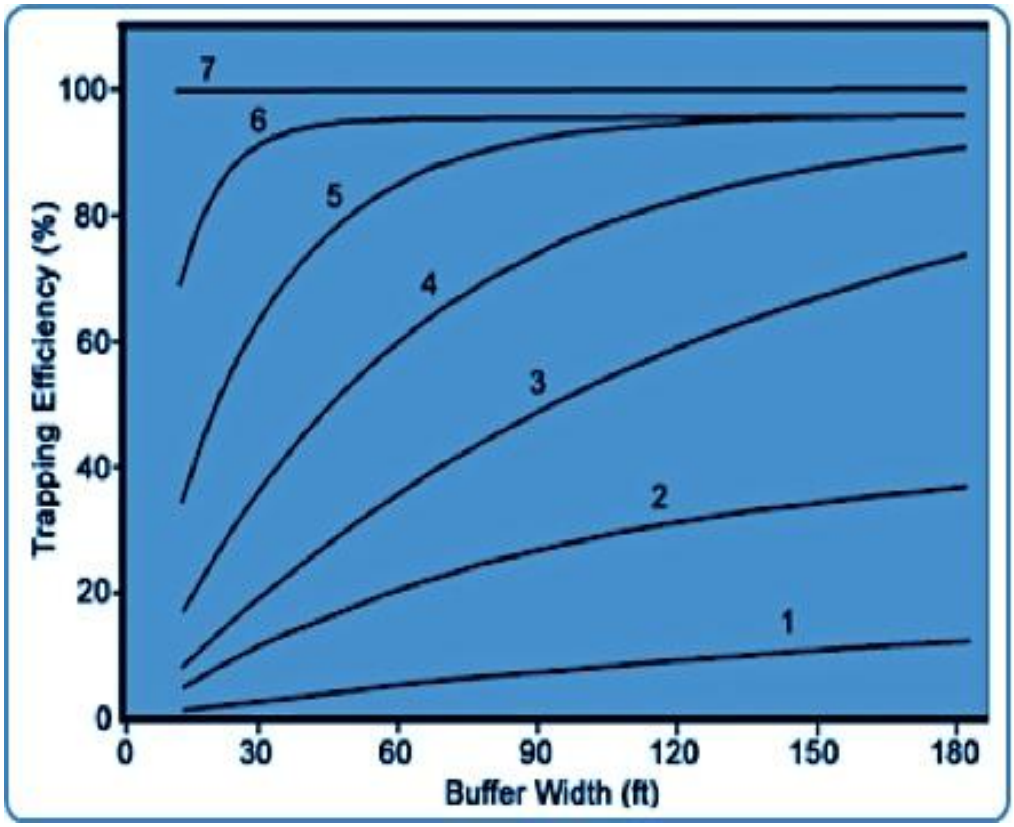

(Credit: *2002 Connecticut Guidelines for Soil Erosion and Sediment Control*)

- Determine the line number that actually accurately reflects your site. To do so:
    - Determine variations for each site characteristic; note the "plus" or "minus" associated with each variation in **Figure 5**.
    - Add up the pluses and minuses to get the total adjustment number (+5 to -5).
    - Add the total adjustment number to the reference line number to get the reference line for your actual site. This is the line that will allow you to determine an appropriate buffer width to achieve a desired sediment reduction rate.
- Identify the desired level of pollutant removal, then using the appropriate line in the graph; estimate the corresponding buffer width that will achieve that level.

Figure 5. Adjustments for Differing Site Characteristics

Table B - Line Selection Adjustment Rules	
	Adjustment Rule
Pollutant Type	3 lines higher (+3) from dissolved pollutants to sediment 2 lines higher (+2) from dissolved pollutants to total P 1 line lower (-1) fro msediment to total P 3 lines lower (-3) from sediment to dissolved pollutants
Field Length	1 line higher (+1) for each halving of the field length 1 line lower (-1) for each doubling of the field length
Slope	1 line higher (+1) for each 2.5% lesser slope 1 line lower (-1) for each 2.5% greater slope
Soil Texture	1 line higher (+1) for each soil category coarser 1 line lower (-1) for each soil category finer
C-Factor	1 line higher (+1) for each 0.35 lower C-factor 1 line lower (-1) for each 0.35 higher C-Factor

Pollutant Type
Dissolved pollutants include nitrates, dissolved P, and soluble pesticides

Field Length
Length of contributing area to the buffer

Slope
Average slope of the buffer and contributing area

Soil Texture Categories
Coarse = Sandy loam, sandy clay loam, and fine sandy loam
Medium = Very fine sandy loam, loam, and silt loam
Fine = Clay loam, silty clay loam, and silt

C-Factor
(from Universal Soil Loss Equation)

Cropland, clean tillage = 1.0	Cropland, plow tillage, low residue = 0.8
Pasture, permanent grass = 0.003	Forest, full canopy = 0.0001
Construction site, no mulch = 1.0	Construction site with secured mulch = 0.1

(Credit: *2002 Connecticut Guidelines for Soil Erosion and Sediment Control*)

Example

The operator of this example site first selected Line 5 (**Figure 6**).

The operator then adjusted for a larger area of disturbance (-1), a steeper slope (-1), and less erosive soil (+1). Total adjustments, therefore, were -1, so the line number changed from 5 to 4 (**Figure 6**).

To achieve the goal of a 60% sediment reduction, the operator must employ a 60-foot wide buffer (See the line marked “Example #1” in (**Figure 7)**.

Figure 6. "Line 5" and Adjustments for Example Site

Example One - Sediment			
Variable	**Initial Reference Line**	**Field Site Condition**	**Adjustment Rule**
Field Length	650 ft	1150 ft	-1
Slope	2.0%	4.5%	-1
Soil Texture	Silty Clay Loam	Loam	+1
C-Factor	0.5	0.5	0
Pollutant Type	Sediment	Sediment	0
Line Number	5		

Total Adjustments: (-1)+(-1)+(1)+(0)+(0) = -1
Final Design Line: (5)+(-1) = 4

(Credit: *2002 Connecticut Guidelines for Soil Erosion and Sediment Control*)

Figure 7. The Answer: A 60-Foot Buffer to Achieve 60% Sediment Reduction

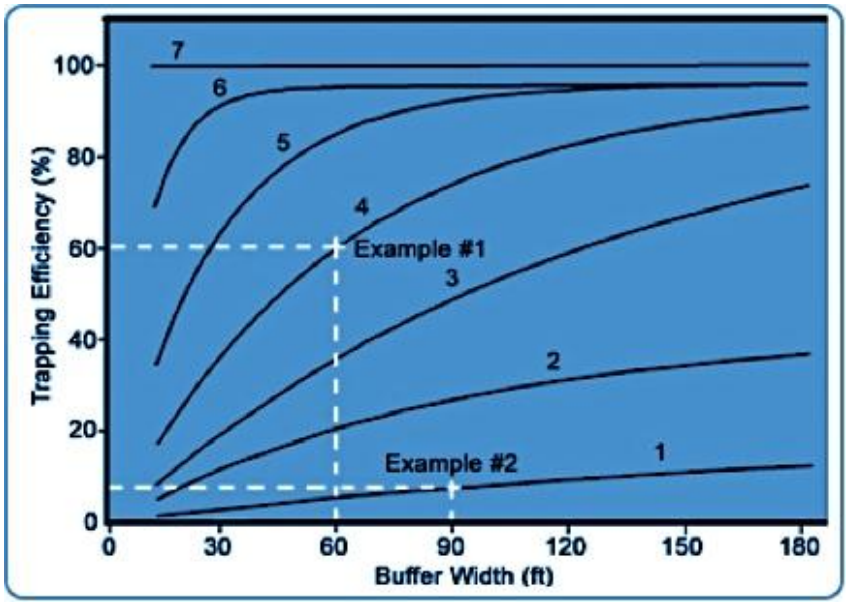

(Credit: *2002 Connecticut Guidelines for Soil Erosion and Sediment Control*)

Establishing Limits of Work

Once wetlands and buffer zones have been delineated, and minimal necessary work zones have been defined, limits of work to ensure appropriate protection can be defined and delineated on site development plans, and flagged/staked in the field prior to commencement of work and site clearing. Limits of work must be installed in a manner that will ensure long-term protection of the buffer throughout the construction process (See **Limit of Work and Site Access Control**, for materials and methods). When installing limit of work and site access controls, be sure to encompass the entire root zone of the outer-most vegetation to be preserved (i.e., the drip line of the outermost branches). See **Tree Protection**, for more details.

Limit of Work and Site Access Control

(Photo Credit: Douglas County, CO)

Definition

- A physical barrier that restricts site access to designated entrances and exits, delineates construction site boundaries, and keeps construction out of sensitive areas such as natural areas to be preserved as open space, wetlands and riparian areas.

Purpose

- To establish a clear limit of work and minimize off-site alterations.
- To limit vehicular or pedestrian access onto the site.
- Not for erosion or sediment control.

Applicability

- Any construction site where a physical barrier is needed to delineate the site perimeter and locations within the site where access is to be restricted.

Planning and Design Requirements

- Controls shall be composed of contractor-grade orange material at least 4 feet high.
- Controls may be chain link, plastic mesh or other approved materials.
- Do not place controls within work limits.

Installation Requirements

- See plan for precise location.
- Install prior to any land disturbing activities.
- Install following manufacturer's recommendations. See **Figure 3-1** for typical installations.
- Studded steel t-posts shall be used, spaced no more than 10 feet apart, and fitted with plastic caps for safety.
- Fencing material shall be securely fastened to the top, middle, and bottom of each post.

Figure 1. Orange Safety or Construction Fence Installation

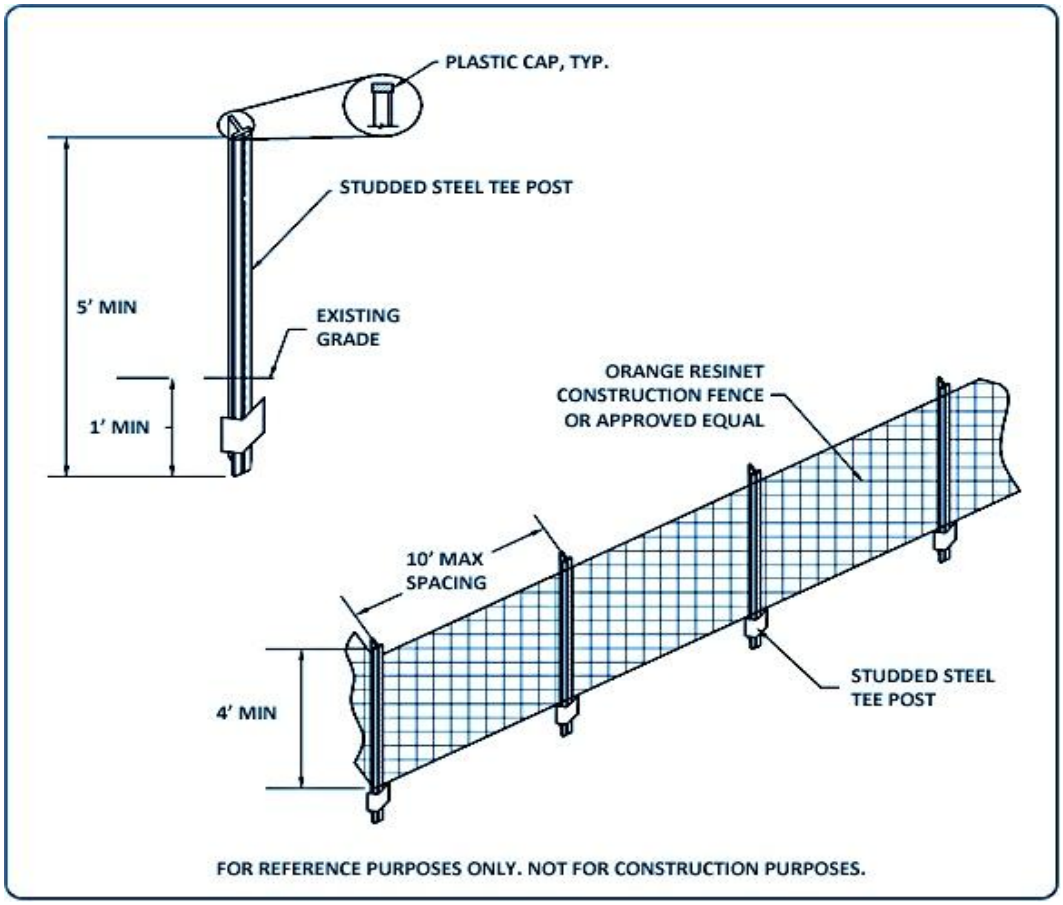

(Credit: *2002 Connecticut Guidelines for Soil Erosion and Sediment Control*)

Inspection, Maintenance, and Removal Requirements

- Frequent observations and maintenance are necessary to maintain controls in effective operating condition. Inspect controls each workday and maintain them in effective operating condition. Maintenance of controls should be proactive, not reactive. Where controls have been damage, sagged, ripped, or failed, repair or replacement should be initiated upon discovery of the failure (and always within 24 hours of a storm that causes surface erosion).
- Inspections and corrective measures should be documented thoroughly.
- Controls are to remain in place until the up-gradient disturbed area is stabilized and approved by the local jurisdiction.
- When controls are removed, all disturbed areas associated with the installation, maintenance, and/or removal of the barrier/structure shall be covered with topsoil, seeded, mulched, or otherwise stabilized as approved by the local jurisdiction.

Tree Protection

(Photo Credit: CASQA)

Definition

- The protection of desirable trees (individual specimens or groups) from mechanical and other injury during construction.

Purpose

- To ensure the survival of desirable trees and associated area where it will be effective for erosion and sediment control, watershed protection, landscape beautification, dust suppression, pollution control, noise reduction, shade and other environmental benefits during construction and after the land has been developed.
- To avoid the high cost of replacing trees.

Applicability

- In areas with desirable trees and forested land that are subject to land disturbance where the protection of individual trees will enhance erosion and sediment control.

Planning and Design Requirements

It can take 20-30 years for seedling trees to mature and provide full benefits, including:

- Stabilization of soil;
- Reduction of storm water runoff velocity;
- Regulation of thermal inputs;
- Moderation of potential solar and wind effects;
- Aesthetic buffers and filters;
- Filtration of air pollutants; and
- Provision of wildlife habitat.

Building sites are often selected because of the presence of mature trees. Planning and care are necessary to protect desirable trees during construction. The following information is given to provide an understanding of the factors that go into planning for tree protection.

Location and Desired Utility

Trees must be appropriate for the intended use of the developed site. Review the location of proposed overhead and underground utilities, paved surfaces, walls, water lines, septic tanks, underground drainage and buildings. Determine if the trees to remain might interfere with these features when they grow to mature height, crown and root spread.

Condition

Selected desirable trees should be healthy and reasonably free of large rotted or broken limbs or trunk sections that could threaten the structural integrity of the tree. Check for evidence of diseases and pests that may seriously affect the health or survivability of the tree.

For groups of trees to be protected in a natural state (vs. a park-like condition with lawn) the understory, dead wood on the forest floor, duff and other organic material must be left undisturbed, except that invasive species may be selectively removed.[4]

Longevity

Long-lived, slow growing tree species should be given greater consideration for protection, particularly the larger specimens of these species. Fast growing, brittle trees are of limited long-term value. Naturally seeded young trees of appropriate species should be given preference especially when older trees on the site are of declining health. These vigorous young trees will typically grow faster than the equivalent nursery grown tree planted after development. Retaining groups of these trees provides the additional benefit of avoided land disturbance, and making it less susceptible to erosion.

Stresses of Construction

Construction activities expose trees to a variety of stresses or conditions which may injure or kill a tree. Planning for and implementing proper tree protection measures require a thorough understanding of these stresses. Beech (Fagus spp.), for example, trees do poorly in construction sites and may be difficult to save if their root systems are disturbed.

Surface Impacts

Natural and construction related conditions exerted on the tree above the ground can cause significant damage.

- Excessive thinning or the removal of most trees from a group may leave remaining trees subject to wind throw. It is best to retain groups of trees rather than individuals.
- Improper or excessive pruning of trees can destroy their aesthetic values, increase the possibility of disease and decay or kill the tree.
- Equipment damage to tree trunks and lower branches increases the possibility of insect damage, disease, and decay.

Root Zone Impacts

Disturbing the soil and roots of a tree can damage or kill it. The roots absorb essential water, oxygen, and nutrients for growth. Most damage to trees from construction activities is the result of root zone stress.

- Raising the grade as little as six inches can retard the normal exchange of air and gases and small roots may suffocate.

---

[4] This is to maintain infiltration, soil water quality treatment processes, and habitat for birds, amphibians and other wildlife, especially important for amphibians when connected to wetlands, forest and for areas 3 acres and larger.

- Raising the grade may also elevate the water table and drown the roots.
- Lowering the grade is not usually as damaging as raising it. However, even shallow cuts of 6 to 8 inches can remove most of the topsoil, destroy some feeder roots and expose the rest to drying and freezing. Grading should not take place within the drip line of any tree to be saved.
- Excavations may cut a large portion of the root system, depriving the tree of water and increasing the chance of wind throw.
- Lowering the grade may lower the water table, inducing drought.
- Trenching or excavating through a tree's root zone can eliminate as much as 40 percent of the root system. Trees suffering such damage usually die within 2 to 5 years.
- Compaction of the soil within the drip line of a tree by equipment operation, materials storage, or paving can block off air and water from roots.
- Construction chemicals or refuse disposed of in the soil can change soil chemistry or be toxic to trees.

Selecting Trees to Be Retained

The proper development of a wooded site requires completion of a plan for tree preservation before clearing and construction begins. Trees should be identified by species, and located on a plan map, either as stands or as individuals, depending on the density and value of the trees.

Consider trees with a long life span; for example, the oaks, hickories, beech and native maple species. Trees should be healthy, of good visual form and free of rotted or broken limbs. Mature healthy native or non-invasive tree species should be given preference over trees which may exhibit disease or decay.

Installation Requirements

Groups of trees and individual trees for retention should be accurately located on the plan and designated as "tree(s) to be saved." Individual specimens that are not part of a tree group should also have their species and diameter noted on the plan.

The limits of clearing should be located outside the drip line of any tree to be retained, and in no case closer than five feet to the trunk of such a tree (**Figure 1**).

Marking individual trees and stands of trees to be retained should be visibly marked with a bright colored surveyor's ribbon or flagging applied in a band circling the tree at a height visible to equipment operators, or with other suitable barriers to construction equipment, such as brightly colored “snow fence”.

During any pre-construction conference, tree preservation and protection measures should be reviewed with the contractor as they apply to that specific project.

Heavy equipment travel, storage or stockpiles of any construction materials including topsoil should not be permitted within the drip line of any tree to be retained.

No toxic materials should be stored within 100 feet of the drip line of any trees to be retained. All construction debris, including paint, acid, nails, gypsum board, wire, chemicals, fuels and lubricants must be properly disposed of.

Any device may be used which will effectively protect the roots, trunk and tops of trees retained on the site. However, trees to be retained within 40 feet of a proposed building or earth moving activities should be protected by fencing (**Figure 1**).

Figure 1. Proper Tree Protection: Fencing at the Drip Line

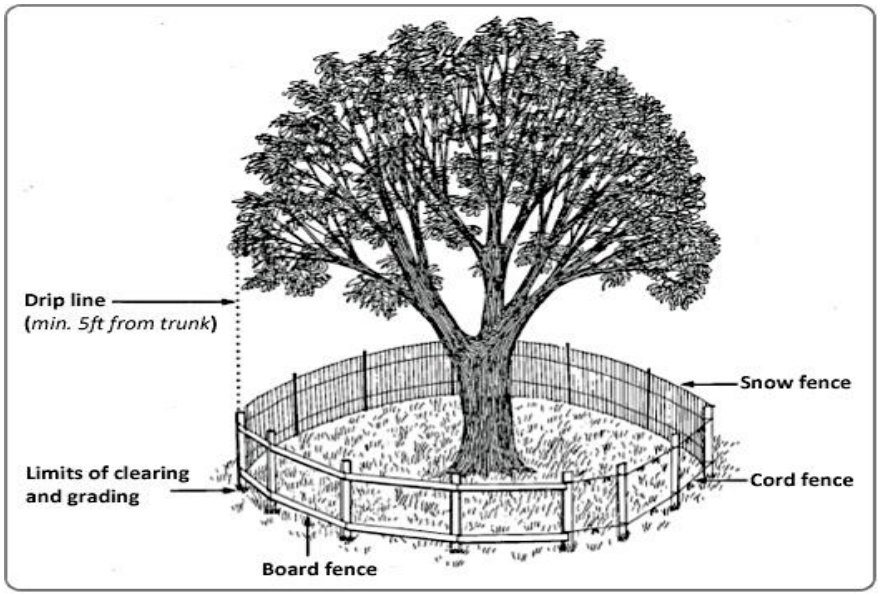

(Credit: *2002 Connecticut Guidelines for Soil Erosion and Sediment Control*)

Fencing should be highly visible, of sturdy construction and at least 3 feet high. Fences may be snow fence, board fence, synthetic fabric fence, plastic fence or similar materials.

Additional trees may be left standing as protection between the trunks to be retained and the limits of clearing. To be effective, the trunks of the trees in the buffer must be no more than six feet apart to prevent passage of equipment and material through the buffer. These additional trees should be re-examined prior to the completion of construction and either given sufficient treatment to ensure survival or removed.

Trunk Armoring may be used as a last resort, with burlap wrapping and 2-inch studs wired vertically no more than two inches apart to a height of five feet encircling the trunk. The root zone within the drip line will still require protection with this alternative. Nothing should ever be nailed to a tree (**Figure 2**).

Figure 2. Trunk Armoring

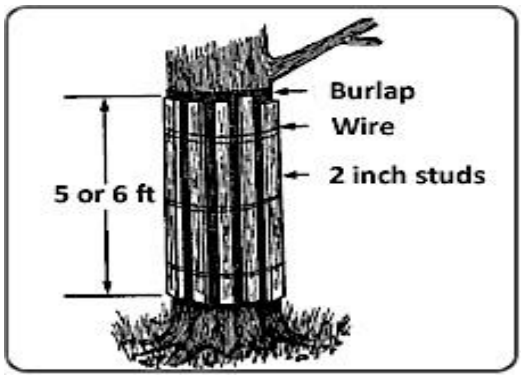

(Credit: *2002 Connecticut Guidelines for Soil Erosion and Sediment Control*)

Fencing and armoring devices should be in place before any earthwork activity is begun, kept in good repair for the duration of construction activities, and be the last items removed during the final cleanup, upon the project's completion.

When the ground level must be raised around an existing tree or tree group, considerations should be made and steps taken to adequately care for the affected tree.

To reduce the amount of root area damaged or killed by trenching activities, excavate as far away as possible from the crown drip line. The ends of damaged and cut roots should be cut off smoothly and may be protected by painting with a tree wound dressing.

Cleanup after a construction project can be a critical time for tree damage. Trees protected throughout the development operation are often destroyed by carelessness during the final cleanup and landscaping. Fences and barriers should be removed after everything else is cleaned up and carried away.

Inspection, Maintenance, and Removal Requirements

Even with precautions, some damage to protected trees may occur. In such cases, the following maintenance guidelines should be followed. Care for serious injuries should be prescribed by a forester or a tree specialist.

- If the soil has become compacted over the root zone of any tree, the ground should be aerated by punching small holes in it with suitable aerating equipment.
- Any damage to the crown, trunk or root system of any tree retained on the site should be repaired immediately.
- Damaged roots should immediately be cut off cleanly inside the exposed or damaged area. Cut surfaces may be painted with approved tree paint. Moist peat moss, burlap or topsoil should be spread over the exposed area.
- All tree limbs damaged during construction or removed for any other reason should be cut off above the collar at the preceding branch junction. Larger limbs may require several cuts to safely remove the damaged limb without damaging the trunk.

Remove all protective materials once final site stabilization is complete and all heavy equipment is removed from the vicinity of the protected tree.

Dust Control

(Photo Credit: US EPA)

Definition

- Dust control involves a variety of measures and technologies to reduce or prevent the movement of dust from construction sites, material stockpiles and other unvegetated areas to sensitive areas. Different measures include, but are not limited to: mulch and vegetation; board, burlap, or snow fence barriers erected at right angles to prevailing wind; or liquid/chemical treatments such as water, tackifiers, calcium chloride and polymers.

Purpose

- These measures are designed to reduce wind erosion and the movement of dust from construction sites, material stockpiles and other unvegetated areas. Problems caused by airborne dust include nuisances, poor visibility, respiratory problems and unwanted deposition of wind transported soils on land and water bodies.

Applicability

- Dust control preparedness is applicable to any construction site with dry, exposed soils.
- Industrial processes, e.g., on-site rock crushing and processing, will require detailed Dust Control Plans and may require additional permitting and mitigation.
- Material stockpiles and haul roads are highly vulnerable to dust control problems.
- Every construction site should have dust control measures in place and/or ready to implement.

Planning and Design Requirements

When construction activities expose soils, dust is emitted during these activities (i.e., excavation, demolition, vehicle traffic, rock drilling and other human activities) and as a result of wind erosion of the exposed earth surfaces. Large quantities of dust can be generated during “heavy” construction activities, such as road and street construction, subdivision, commercial or industrial development.

In planning for dust controls, a careful examination of each site is critical. In general, dust control programs try to limit the size of dust generation areas.

- Limit the amount of exposed soil by phasing construction to reduce the area of land disturbed at any one time and by using, as soon as possible, stabilization measures such as **Mulching; Seeding for Temporary Vegetative Cover; Seeding for Permanent Vegetative Cover; Sodding; Landscape Planting; or Slope Protection.**
- Maintain as much natural vegetation as is practicable. Undisturbed vegetative buffers left between graded areas and area to be protected can be very effective.
- Identify and address sources of dust generated by construction activities. Limit construction traffic to predetermined routes. Paved surfaces require mechanical sweepers to remove soil that has been deposited or tracked onto the pavement. On unpaved travel ways and temporary haul roads, use road construction stabilization measures and/or water as needed to keep surface damp. Stationary sources of dust, such as rock crushers, use fine water sprays to control dust. If water is expected to be needed for dust control, identify the source of water in advance. Pumping from streams, pond and similar waterbodies may require approval from the RI DEM Freshwater Wetlands Program.
- Identify and address sources of wind generated dust. Provide special consideration to hill tops and long reaches of open ground where slopes may be exposed to high winds. Consider breaking up long reaches with temporary windbreaks constructed from brush piles, geotextile silt fences or straw bales. Plan on stabilizing slopes early. Mulch for seed will require anchoring when used.
- Consider water quality when selecting the method and/or materials used for dust control. When considering the use of calcium chloride, be aware of the following: the receiving soil's permeability so as to prevent groundwater contamination; the timing of the application to rainfall to prevent washing of salts into sensitive areas such as wetlands and watercourses; and proximity to sensitive areas such as watercourses, ponds, established or soon to be established area of plantings, where salts could impair or destroy plant and animal life. Additionally, some materials used for dust control may be rendered ineffective by degraded water quality if it is used for mixing.

Installation Requirements

- Water treatment should be applied until the surface is moist. It needs to be repeated as often as required to maintain moisture.
- Devices, barriers and fences should be installed in accordance with manufacturers' guidelines.
- Application rates for dust control treatment agents such as calcium chloride, polymers and tackifiers very greatly. Follow manufacturer's written instructions to assure appropriate application rates.

Inspection, Maintenance, and Removal Requirements

- Treatments using water, polymers, tackifiers, etc. need to be maintained and repeated as required by wet and dry conditions and product longevity.
- Areas with dust control measures in place should be inspected daily.
- Physical structures such as barriers and fences should be regularly inspected and repaired as needed.

Spill Prevention and Control Plans

(Photo Credit: Douglas County, CO)

Definition

- Spill Prevention and Control Plans (SPCPs) clearly state practices (including, but not limited to Concrete Washouts (Measure 15), Stockpile and Staging Area Management (Measure 12), Vehicle Fueling, Maintenance and Washing (Measure 16) and Waste Management (Measure 14) to stop the source of a spill, contain the spill, clean up the spill, dispose of contaminated materials, and train personnel to prevent and control future spills.

Purpose

- To prevent or allow for rapid response to spills of hazardous materials

Applicability

- SPCPs are applicable to construction sites where hazardous wastes are stored or used. Hazardous wastes include pesticides, paints, cleaners, petroleum products, fertilizers, and solvents.
- Small sites and all projects implementing a Soil Erosion Sediment Control Plan (SESC Plan) that are not required to develop a formal SPCC plan (see Note below) must at a minimum address the following:
    - All chemicals and/or hazardous waste material must be stored properly and legally in covered areas, with containment systems constructed in or around the storage areas.
    - Areas must be designated for materials delivery and storage.
    - All areas where potential spills can occur and their accompanying drainage points must be described.
    - The Applicant (Owner and Operator) must establish spill prevention and control measures to reduce the chance of spills, stop the source of spills, contain and clean-up spills, and dispose of materials contaminated by spills.

Note: Spill Prevention and Control Plans support the Spill Prevention, Control and Countermeasures Plans (SPCC Plans) regulations, found in 40 CFR 112, that require the owners and operators of facilities to prepare and implement spill prevention plans to avoid oil spills into navigable waters or adjoining shorelines. SPCC plans must identify operating procedures in place and control measures installed to prevent oil spills, and countermeasures to contain, clean up, or mitigate the effects of any oil spills that occur. The plan must be updated as conditions change at your construction site.

Any business that maintains a total aboveground oil storage capacity of greater than 1,320 gallons, or a total underground oil storage capacity of greater than 42,000 gallons, where there is a reasonable potential for a discharge to reach navigable waters is subject to SPCC regulatory requirements.

Additional information on the SPCC can be found in Appendix G

Planning and Design Requirements

When developing an SPCP, a construction site operator should identify potential spill or source areas, such as loading and unloading, storage, and processing areas; places where dust or particulate matter is generated; and areas designated for waste disposal. Also, evaluate spill potential for stationary facilities, including manufacturing areas, warehouses, service stations, parking lots, and access roads. Conduct this evaluation during the project-planning phase, and reevaluate it during each phase of construction.

The SPCP should define material handling procedures and storage requirements and outline actions necessary to reduce spill potential and impacts on stormwater quality. This can be achieved by:

- Recycling, reclaiming, or reusing process materials, thereby reducing the amount of process materials that are brought into the facility;
- Installing leak detection devices, overflow controls, and diversion berms;
- Disconnecting any drains from processing areas that lead to the storm sewer;
- Performing preventative maintenance on storm tanks, valves, pumps, pipes, and other equipment;
- Using material transfer procedures or filling procedures for tanks and other equipment that minimize spills; and
- Substituting less or non-toxic materials for toxic materials.

The SPCP should document the locations of spill response equipment and procedures to be used and ensure that procedures are clear and concise. The plan should include step-by-step instructions for the response to spills at a facility. In addition, the spill response plan should:

- Identify individuals responsible for implementing the plan;
- Define safety measures to be taken with each kind of waste;
- Specify how to notify appropriate authorities, such as police and fire departments, hospitals, or municipal sewage treatment facilities for assistance;
- State procedures for containing, diverting, isolating, and cleaning up the spill; and
- Describe spill response equipment to be used, including safety and cleanup equipment.

The plan can be a procedural handbook or a poster to be placed in several locations at the site.

Installation Requirements

Training is necessary to ensure that all workers are knowledgeable enough to follow procedures outlined in the SPCP. Make equipment and materials for cleanup readily accessible, and mark them clearly so workers can follow procedures quickly and effectively.

Equipment/vehicle fueling and repair/maintenance operations or hazardous material storage will

not take place within any of the constraint areas located on the “Constraint Map” (Section 1.12) and will be approved by the project engineer or responsible person.

Inspection, Maintenance, and Removal Requirements

Spills and leaks will be avoided through frequent inspection of equipment and material storage areas. Heavy equipment and other vehicles will be routinely inspected for leaks and repaired as necessary. Material storage areas will be routinely inspected for leaky containers, open containers, or improper storage techniques that may lead to spills or leaks. Appropriate cleanup procedures and supplies will be available on-site.

Spills will be cleaned up immediately and following proper response procedures and in accordance with any applicable regulatory requirements. At no time will spills be cleaned and flushed down storm drains or in to any environmentally sensitive area (e.g., stream, pond, or wetland).

Update the SPCP regularly to accommodate any changes in the site, procedures, or responsible staff. Conduct regular inspections in areas where spills might occur to ensure that procedures are posted and cleanup equipment is readily available.

Stockpile and Staging Area Management

(Photo Credit: CASQA)

Definition

- Procedures and measures to manage stockpiles of topsoil and other types materials, including, but not limited to: paving materials such as Portland cement concrete (PCC) rubble, asphalt concrete (AC), asphalt concrete rubble, aggregate base, aggregate sub base or pre-mixed aggregate, asphalt minder (so called “cold mix” asphalt), and pressure treated wood.

Purpose

- To reduce or eliminate air and stormwater pollution from stockpiles.
- To prevent unnecessary damage resulting from erosion of stockpile material.
- To ensure that natural drainage is not obstructed.

Applicability

- Any construction site.

Planning and Design Requirements

Be sure that all anticipated stockpile areas and stockpile management techniques are illustrated on the construction and site plans, and flagged in the field.

Attempt to maximize the distance of stockpiles from wetlands, watercourses, drainage ways, and steep slopes. When the stockpile is down-gradient from a long slope, divert runoff water away from or around the stockpile (see **Diversions**).

When appropriate, use the appropriate seed mix to stabilize the stockpiled material based upon the length of time it is to remain stockpiled. Information gathered from soil borings and soil delineation can be used to plan the type of seed and any soil amendments that are appropriate for the stockpile.

If a stockpile is located off-site, local zoning approval may be required. In addition to the above criteria, stockpiles that are located off-site require a construction entrance pad installed at that site (see **Construction Entrances**). Depending on the volume of traffic, the installation of “truck

crossing" signs and sweeping of the roadway (see **Dust Control and Street Sweeping**) may also be necessary.

Installation Requirements

Installation Requirements for All Stockpiles

- Protect all stockpiles from stormwater run-on using a temporary perimeter sediment barrier such as berms, dikes, fiber rolls, silt fences, sandbag, gravel bags, or straw bales. Install barrier around the stockpile area approximately 10 feet from the proposed toe of the slope (see **Linear Sediment Barriers**).
- The side slopes of stockpiled material that is erodible should be no steeper than 2:1.
- Stockpiles that are not to be used within 30 days need to be seeded and mulched immediately after formation of the stockpile (see **Seeding for Temporary Vegetative Cover; Seeding for Permanent Vegetative Cover; Mulching**).
- Implement wind erosion control measures as appropriate on all stockpiled material.

Further Protective Measures for Non-Active Stockpiles of Select Materials

Soil

- During the rainy season, soil stockpiles should be covered or protected with soil stabilization measures and a temporary perimeter sediment barrier at all times.

Portland cement concrete rubble, asphalt concrete, asphalt concrete rubble, aggregate base, or aggregate sub base

- During the rainy season, the stockpiles should be covered or protected with a temporary perimeter sediment barrier at all times.
- During the non-rainy season, the stockpiles should be covered or protected with a temporary perimeter sediment barrier prior to the onset of precipitation.

"Cold Mix"

- During the rainy season, cold mix stockpiles should be placed on and covered with plastic or comparable material at all times.
- During the non-rainy season, cold mix stockpiles should be placed on and covered with plastic or comparable material prior to the onset of precipitation.

Pressure treated wood with copper, chromium, and arsenic or ammonia, copper, zinc, and arsenate

- During the rainy season, treated wood should be covered with plastic or comparable material at all times.
- During the non-rainy season, treated wood should be covered with plastic or comparable material at all times and cold mix stockpiles should be placed on and covered with plastic or comparable material prior to the onset of precipitation.

Further Protective Measures for Active Stockpiles

- All stockpiles should be protected with a temporary linear sediment barrier prior to the onset of precipitation.
- Stockpiles of "cold mix" should be placed on and covered with plastic or comparable material prior to the onset of precipitation.

Inspection, Maintenance, and Removal Requirements

- Inspect and verify that activity–based measures are in place prior to the commencement of associated activities.
- While activities associated with the measure are under way, inspect weekly during the rainy season and of two-week intervals in the non-rainy season to verify continued measure implementation
- Repair and/or replace perimeter controls and covers as needed to keep them functioning properly.
- After the stockpile has been removed, the site should be graded and permanently stabilized.

Street Sweeping

Definition

- Street sweeping and vacuuming include use of self-propelled and walk-behind equipment to remove sediment from roadways in construction sites, road construction sites, and other paved areas where sediment has been deposited.

Purpose

- To remove sediment and trash and the associated pollutants (such as nutrients and oils) from roadways in or near construction sites, and so reduce off-site and on-site damage and/or health hazards for humans, wildlife and plant life;
- To improve the aesthetics of roadways;
- To control dust;
- To decrease the accumulation of sediments, trash, and pollutants in catch basins or receiving waters.

Applicability

- On roadways or other paved surfaces in or near the construction site that are subject to construction traffic;
- Sweeping may not be effective when sediment is wet or caked on the paved surface.

Planning and Design Requirements

Different designs are available with typical sweepers categorized as (1) mechanical broom sweepers; (2) vacuum-assisted wet sweepers; and (3) dry vacuum sweepers.

Streets, roads, highways and parking lots in or near construction sites can contribute significant amounts of pollutants to stormwater runoff to surface waters. Pollutants, including sediment, debris, trash, road salt, and trace metals can be minimized by street sweeping. A large benefit of street sweeping is that pollutants are captured before they are transported and become soluble in the stormwater. Removal of soluble pollutants in downstream SESC measures may be more difficult and costly.

The effectiveness of street sweeping is very dependent upon when it is done and the number of dry days between storm events. Limiting the number of points of egress from a construction site can allow for more efficient containment and sweeping regimes. Mechanical broom and vacuum-assisted wet sweepers are estimated to reduce nonpoint pollution 5 to 30% and nutrient content up to 15%. Dry vacuum sweepers, being a newer design, have higher removal efficiencies with estimates ranging from 35 to 80% for nonpoint pollution and 15 to 40% for nutrient content. (*Fairfax County – LID BMP Fact Sheet*).

Installation Requirements

Use mechanical sweeping on paved areas where dust and fine materials accumulate as a result of truck traffic, pavement saw cutting spillage, and wind or water deposition from adjacent disturbed areas. Sweep daily in heavily trafficked areas.

Visible sediment tracking should be swept or vacuumed daily.

Inspection, Maintenance, and Removal Requirements

Inspect and sweep prior to rain events.

Properly disposed of collected street sweeping wastes. Street sweeping material often includes sand, salt, leaves, and debris removed from roads. Often the collected sweepings contain pollutants and must be tested prior to disposal to determine if the material is hazardous. Constructions Site Owners and Operators should adhere to all federal and state regulations that apply to the disposal and reuse of sweepings.

Federal and state regulations may allow the reuse of sweepings for general fill, parks, road shoulders and other applications as long as the material is not a threat to surface waters. Prior to reuse, trash, leaves, and other debris from sweepings should be removed by screening or other methods (MPCA, 1997). Trash and debris removed should be disposed of by recycling or sent to a landfill (MPCA, 1997).

Repeat application of sweeping control measures when fugitive dust becomes evident.

Waste Management

(Photo Credit: State of Vermont)

Definition

- On-site management of trash disposal, recycling, proper material handling, and spill prevention and cleanup measures, proper location of refuse piles, covering materials that might be displaced by rainfall or stormwater runoff, and preventing spills and leaks from hazardous materials.

Purpose

- To reduce the potential for stormwater runoff to mobilize construction site wastes and contaminate surface or ground water.
- To reduce the risk of pollution from materials such as surplus or refuse building materials or hazardous wastes.

Applicability

- Every construction site.

Planning and Design Requirements

Be sure that all anticipated waste management areas and techniques are illustrated on the construction and site plans, and flagged in the field.

An effective waste management system requires training and signage to promote awareness of the hazards of improper storage, handling, and disposal of wastes. The only way to be sure that waste management measures are being followed is to be aware of worker habits and to inspect storage areas regularly. Extra management time may be required to ensure that all workers are following the proper procedures.

The waste management (collection) area(s) will not be within any of the constraint areas located on the “Constraint Map” of the SESC measures and will be approved by the project engineer or responsible person.

Solid Wastes

- Designate a waste management (collection) area(s) on the site that does not receive a substantial amount of runoff from upland areas and does not drain directly to a waterbody.
- Ensure that containers have lids so they can be covered before periods of rain, and keep containers in a covered area whenever possible.
- Schedule waste collection to prevent the containers from overfilling.

Hazardous Materials and Wastes

- Consult with local waste management authorities about the requirements for disposing of hazardous materials.
- To ensure the proper disposal of contaminated soils that have been exposed to and still contain hazardous substances, consult with state or local solid waste regulatory agencies or private firms. Some landfills might accept contaminated soils, but they require laboratory tests first.
- Paint and dirt are often removed from surfaces by sandblasting. Sandblasting grits are the byproducts of this procedure and consist of the sand used and the paint and dirt particles that are removed from the surface. These materials are considered hazardous if they are removed from older structures because they are more likely to contain lead-, cadmium-, or chrome-based paints. To ensure proper disposal of sandblasting grits, contract with a licensed waste management or transport and disposal firm.

Pesticides and Fertilizers

- Construct berms or dikes to contain stored pesticides and fertilizers in case of spillage.
- Have equipment and absorbent materials available in storage and application areas to contain and clean up any spills that occur.

Petroleum Products

- Store new and used petroleum products for vehicles in covered areas with berms or dikes in place to contain any spills.
- Have equipment available in fuel storage areas and in vehicles to contain and clean up any spills that occur.

Detergents

- Phosphorous- and nitrogen-containing detergents are used in wash water for cleaning vehicles. Excesses of these nutrients can be a major source of water pollution. Use detergents only as recommended, and limit their use on the site.

Implementation Requirements

Solid Wastes

- Clean up spills immediately. For hazardous materials, follow cleanup instructions on the package. Use an absorbent material such as sawdust or kitty litter to contain the spill.
- During the demolition phase of construction, provide extra containers and schedule more frequent pickups.
- Collect, remove, and dispose of all construction site wastes at authorized disposal areas. Contact a local environmental agency to identify these disposal sites.

Hazardous Materials and Wastes

- To prevent leaks, empty and clean hazardous waste containers before disposing of them.
- Never remove the original product label from the container because it contains important safety information. Follow the manufacturer's recommended method of disposal, which should be printed on the label.
- Never mix excess products when disposing of them, unless specifically recommended by the manufacturer.

Pesticides and fertilizers

- Follow all federal, state, and local regulations that apply to the use, handling, or disposal of pesticides and fertilizers.
- Do not handle the materials any more than necessary.
- Store pesticides and fertilizers in a dry, covered area.
- Follow the recommended application rates and methods.

Petroleum Products

- Immediately contain and clean up any spills with absorbent materials.

Detergents

- Do not dump wash water containing detergents into the storm drain system; direct it to a sanitary sewer or contain it so that it can be treated at a wastewater treatment plant.

Inspection, Maintenance, and Removal Requirements

- All waste containers will be covered to avoid contact with wind and precipitation.
- Waste collection will be scheduled frequently enough to prevent containers from overfilling.
- All construction site wastes will be collected, removed, and disposed of in accordance with applicable regulatory requirements and only at authorized disposal sites.
- Inspect storage and use areas and identify containers or equipment that could malfunction and cause leaks or spills.
- Check equipment and containers for leaks, corrosion, support or foundation failure, or other signs of deterioration, and test them for soundness.
- Immediately repair or replace any that are found to be defective.

Concrete Washouts

Definition

- A designated washout area with signs to provide careful oversight to manage concrete washwater that is generated from washing out ready-mix trucks, drums and pumps; it also includes the water from rinsing off chutes, equipment (wheelbarrows and hand tools) , and concrete truck exteriors to prevent improper dumping of concrete wash water. A device or area consisting of a system of weirs or filters to remove solids and then be reused to wash down more chutes and equipment at the construction site or as an ingredient for making additional concrete.

Purpose

- To prevent or reduce the discharge of pollutants to stormwater from concrete waste by conducting washout offsite, or performing onsite washout in a designated area to prevent pollutants from entering surface waters or groundwater.
- To collect and retain all the concrete washout water and solids in leak proof containers, so that this caustic material does not reach the soil surface and then migrate to surface waters or into the ground water,
- To recycle 100 percent of the collected concrete washout water and solids. Another objective is to support the diversion of recyclable materials from landfills.

Applicability

- Any construction site where:
    - Concrete is used as a construction material;
    - It is not possible to dispose of all concrete wastewater and washout offsite (ready mix plant, etc.); or
    - Concrete trucks, pumpers, or other concrete coated equipment are washed onsite.

Planning and Design Requirements

Be sure that all anticipated concrete washout areas are illustrated on the construction and site plans, and flagged in the field.

Different types of washout containers are available for collecting, retaining, and recycling the washwater and solids from washing down mixed truck chutes and pump truck hoppers at construction sites.

Locating a Concrete Washout Area on Construction Site Plans and in the Field

- Locate washout area at least 50 feet from sensitive areas such as storm drains, open ditches, or water bodies, including all jurisdictional wetlands.
- Allow convenient access for concrete trucks, preferably near the area where the concrete is being poured.
- If trucks need to leave a paved area to access washout, prevent track-out with a pad of rock or stone (see **Construction Entrances**). These areas should be far enough away from other construction traffic to reduce the likelihood of accidental damage and spills.
- The number of facilities to be installed should depend on the expected demand for storage capacity.
- On large sites with extensive concrete work, washouts should be placed in multiple locations for ease of use by concrete truck drivers

Types of Concrete Washout Area

- Prefabricated washout containers: A prefabricated concrete washout containers that are typically delivered to the site (**Figure 1**). Some services provide the containers alone without providing maintenance and disposal of materials, while other companies offer complete service that includes delivery of containers and regular pickups of solid and liquid waste materials. The prefabricated containers resist damage and protect against spills and leaks. Full-service option relieves the site superintendent of the burden of disposing of materials. Some companies offer prefabricated washout containers with ramps to accommodate concrete pump trucks.

Figure 1. Prefabricated Concrete Washout Container with Ramp

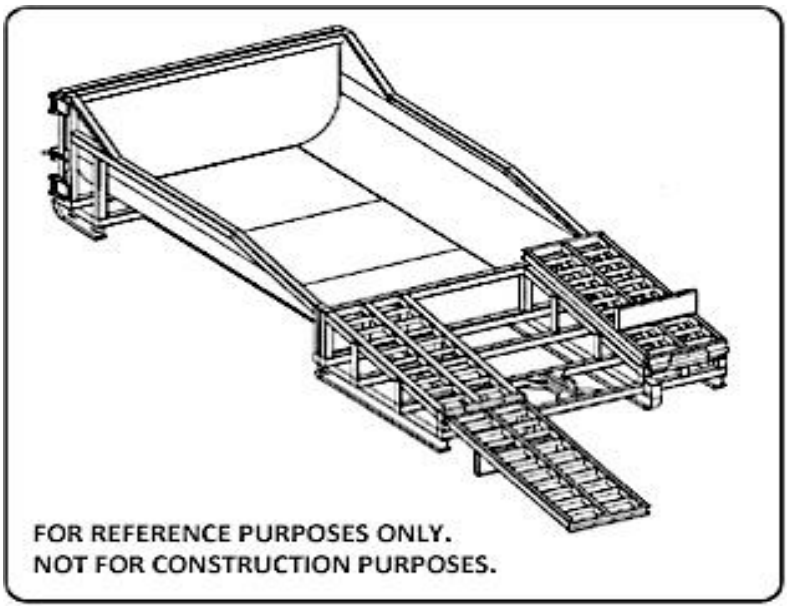

(Credit: *2002 Connecticut Guidelines for Soil Erosion and Sediment Control*)

- Self-installed concrete washouts: Construction of an on-site concrete washout facility by site contactor or subcontractor. These self-installed structures are much less reliable than prefabricated containers and are prone to leaks. There are two types of self-installed concrete washouts:
  - Below-grade washouts will prevent breaches and reduce the likelihood of spills and contaminated stormwater runoff.
  - Above-grade washouts must be carefully sized, inspected and maintained to prevent leaks and spills.

Construction Requirements

- All washout facilities
  - Concrete washout facilities shall be constructed and maintained in sufficient quantity and size to contain all liquid and concrete waste generated by washout operations. (Note: Approximately 7 gallons of wash water are used to wash one truck chute. Approximately 50 gallons are used to wash out the hopper of a concrete pump truck.)
  - Locate washout area at least 50 feet from sensitive areas such as storm drains, open ditches, or water bodies, including wetlands.
  - Allow convenient access for concrete trucks, preferably near the area where the concrete is being poured.
  - If trucks need to leave a paved area to access washout, prevent track-out with a pad of rock or stone (see **Construction Entrances**). These areas should be far enough away from other construction traffic to reduce the likelihood of accidental damage and spills.
  - The number of facilities to be installed should depend on the expected demand for storage capacity.
  - On large sites with extensive concrete work, washouts should be placed in multiple locations for ease of use by concrete truck drivers
- Self-installed above-grade concrete washouts should be constructed as shown on the details at the end of this measure, with a recommended minimum length and minimum width of 10 ft, but with sufficient quantity and volume to contain all liquid and concrete waste generated by washout operations. Straw bales and staking materials shall conform to the provisions in **Figure 2.** Plastic lining material should be a minimum of 10 mil polyethylene sheeting and should be free of holes, tears, or other defects that compromise the impermeability of the material.

Figure 2. Temporary Concrete Washout Facility

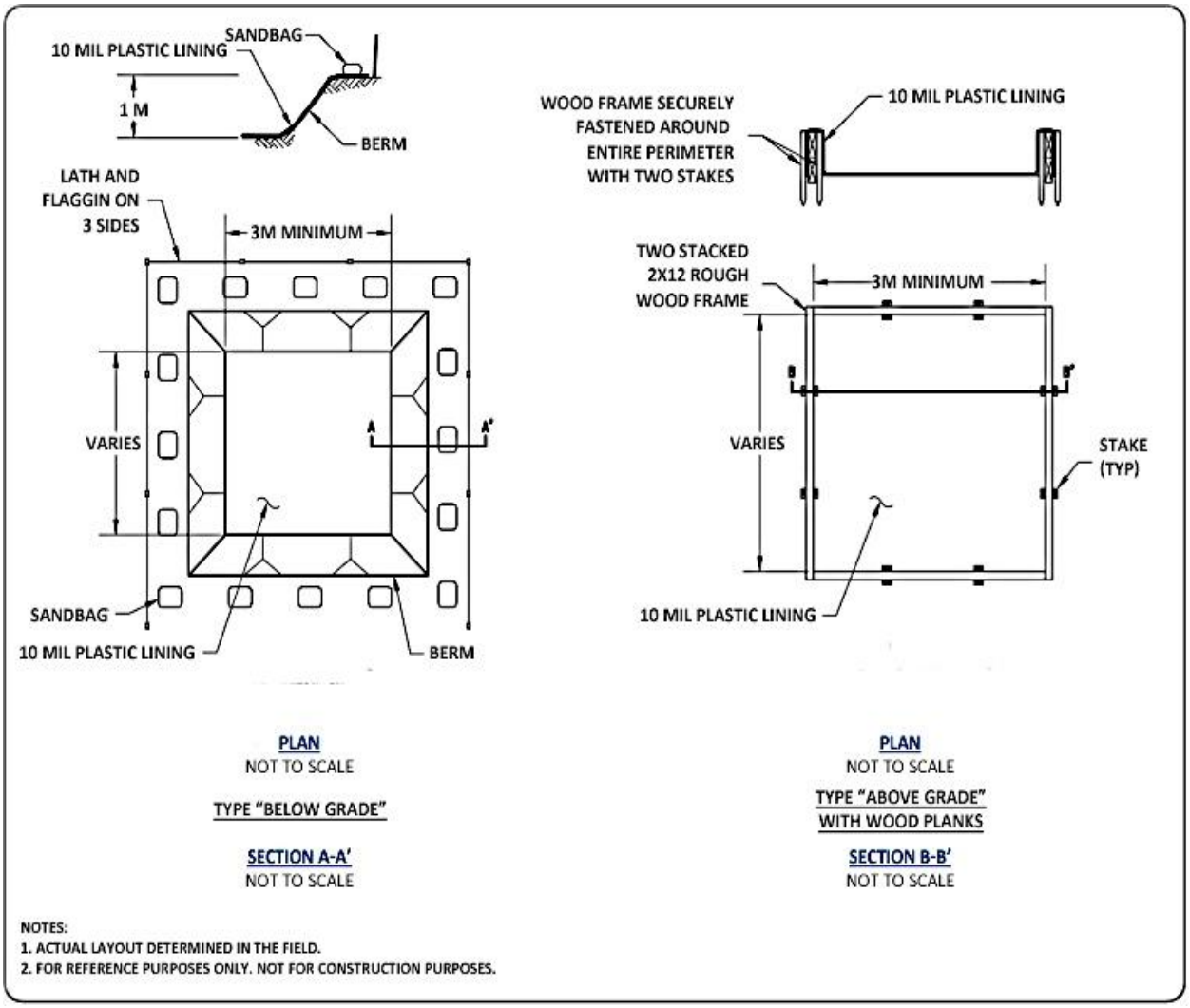

(Credit: *2002 Connecticut Guidelines for Soil Erosion and Sediment Control*)

- Self-installed above-grade washouts on larger sites must be at least 10 feet wide by 10 feet long and sized to contain all liquid and solid waste expected to be generated in between cleanout periods. Washouts at smaller sites can be smaller according to the expected capacity needed. Include a minimum of 12 inch freeboard in the sizing calculations. One can make the structures from staked straw bales or sandbags double- or triple-lined with plastic sheeting of at least 10-mil thickness that has no holes or tears.
- Self-installed below-grade washouts should be constructed as shown on the details at the end of this measure, with a recommended minimum length and minimum width of 10 ft. They must be sized to contain all liquid and solid waste expected to be generated in between cleanout periods.
  - Lath and flagging should be commercial type.
  - Plastic lining material shall be a minimum of 10 mil polyethylene sheeting and should be free of holes, tears or other defects that compromise the impermeability of the material.
  - Liner seams shall be installed in accordance with manufacturers' recommendations.

  - Soil base shall be prepared free of rocks or other debris that may cause tears or holes in the plastic lining material.
- Self-installed below-grade washouts on larger sites should have a the at least 10 feet wide by 10 feet long and accommodate a minimum 12 inch freeboard (safety margin) in the sizing calculations.

Onsite Temporary Concrete Washout Facility, Transit Truck Washout Procedures

Washout of concrete trucks shall be performed in designated areas only. Concrete washout from concrete pumper bins can be washed into concrete pumper trucks and discharged into designated washout area or properly disposed of offsite. Once concrete wastes are washed into the designated area and allowed to harden, the concrete should be broken up, removed, and disposed of per applicable solid waste regulations. Dispose of hardened concrete on a regular basis.

Inspection and Maintenance

Inspection

- Inspect and verify that concrete washout SESC measures are in place prior to the commencement of concrete work.
- During periods of concrete work, inspect daily to verify continued performance.
- Check overall condition and performance.
- Check remaining capacity (% full).
- If using self-installed washout facilities, verify plastic liners are intact and sidewalls are not damaged.
- If using prefabricated containers, check for leaks.

Maintenance

- Washout facilities shall be maintained to provide adequate holding capacity with a minimum freeboard of 12 inches.
- Washout facilities must be cleaned, or new facilities must be constructed and ready for use once the washout is 75% full.
- If the washout is nearing capacity, vacuum and dispose of the waste material in an approved manner.
- Do not discharge liquid or slurry to waterways, storm drains or directly onto ground.
- Do not use sanitary sewer without local approval.
- Place a secure, non-collapsing, non-water collecting cover over the concrete washout facility prior to predicted wet weather to prevent accumulation and overflow of precipitation.
- Remove and dispose of hardened concrete and return the structure to a functional condition. Concrete may be reused onsite or hauled away for disposal or recycling.
- When materials from the self-installed concrete washout are removed, build a new structure; or, if the previous structure is still intact, inspect for signs of weakening or

damage, and make any necessary repairs. Re-line the structure with new plastic after each cleaning.

- Materials used to construct temporary concrete washout facilities shall be removed from the site of the work and disposed of or recycled.
- Holes, depressions or other ground disturbance caused by the removal of the temporary concrete washout facilities shall be backfilled, repaired, and stabilized to prevent erosion.

Removal of Temporary Concrete Washout Facilities

When temporary concrete washout facilities are no longer required for the work, the hardened concrete, slurries and liquids shall be removed and properly disposed of.

Vehicle Fueling, Maintenance and Washing

Definition

- Designated areas for equipment fueling, maintenance and storage of overnight storage of construction equipment and materials used for vehicle fueling, maintenance and washing.

Purpose

- To prevent untreated nutrient-enriched wastewater or hazardous wastes from being discharged to surface or ground waters.

Applicability

- These procedures are suitable on all construction sites where vehicle and equipment fueling takes place.

> **Note**: Costs of connection to sanitary sewers; disposal of wash water (fees charged by hazardous waste disposal facilities); construction of enclosed maintenance area; and labor for hazardous waste storage, handling, and disposal may be problematic.
>
> **Note**: Depending on the volume of wastewater created and the type of detergents used, vehicle wash areas may require permits.

Planning and Design Requirements

Be sure that all anticipated vehicle fueling, maintenance, and washing areas are illustrated on the construction and site plans, and flagged in the field.

Fueling operations can result in small and large spills. Vehicle maintenance operations produce substantial amounts of hazardous and other wastes that require regular disposal. Vehicle washing produces contaminated wash water. Ideally, vehicle fueling, maintenance, and washing occur in garages and wash facilities, not on active construction sites. Sending vehicles and equipment offsite should be done in conjunction with properly designed and located Construction Entrance/Exit. Onsite vehicle and equipment fueling should only be used where it is impractical to send vehicles and equipment offsite for fueling. If these activities must occur onsite, operators

should follow these best management measures to prevent fuel spills and leaks, and reduce or eliminate contamination of stormwater.

- Enclose or cover stored fuel.
- Use a covered, paved area dedicated to vehicle maintenance and washing.
- Develop a spill prevention and cleanup plan.
- Prevent hazardous chemical leaks by properly maintaining vehicles and equipment.
- Properly cover and provide secondary containment for fuel drums and toxic materials.
- Properly handle and dispose of vehicle wastes and wash water.
- Training employees and subcontractors in proper procedures.

Installation Requirements

Vehicle fueling, maintenance and/or washing will occur off-site, or in designated areas. Designated areas will not be located within any of the constraint areas located on the "Constraint Map" in the SESC Plan and will be approved by the project engineer or responsible person.

Areas will be clearly designated, and berms, sandbags, or other barriers will be used around the perimeter of the maintenance area to prevent storm water contamination.

Fueling Operational Procedures

- Discourage "topping-off" of fuel tanks.
- Make available absorbent spill cleanup materials and spill kits in fueling areas and on fueling trucks, and should be disposed of properly after use.
- Use drip pans or absorbent pads during vehicle and equipment fueling, unless the fueling is performed over an impermeable surface in a dedicated fueling area.
- Use absorbent materials on small spills. Do not hose down or bury the spill. Remove the adsorbent materials promptly and dispose of properly.
- Avoid mobile fueling of mobile construction equipment around the site; rather, transport the equipment to designated fueling areas. With the exception of tracked equipment such as bulldozers and large excavators, most vehicles should be able to travel to a designated area with little lost time.
- Train employees and subcontractors in proper fueling and cleanup procedures.
- When fueling must take place onsite, designate an area away from drainage courses to be used. Fueling areas should be identified in the SESC Measures.
- Protect dedicated fueling areas from stormwater run-on and runoff with berms and dikes to prevent run-on, runoff, and to contain spills.
- Locate fueling areas at least 50 ft away from and downstream from drainage facilities and watercourses.
- Perform fueling on level-grade areas.
- Equip nozzles used in vehicle and equipment fueling with an automatic shutoff to control drips. Fueling operations should not be left unattended.
- Use vapor recovery nozzles to help control drips as well as air pollution where required.
- Federal, state, and local requirements should be observed for any stationary above ground storage tanks.

Maintenance Operational Procedures

- Designate special paved areas for vehicle repair.

Washing Operational Procedures

- Use blowers or vacuums instead of water to remove dry materials from vehicles if possible.
- Because water alone can remove most dirt adequately, use high-pressure water spray without detergents at vehicle washing areas. If detergents must be used, avoid phosphate- or organic-based cleansers to reduce nutrient enrichment and biological oxygen demand in wastewater. Use only biodegradable products that are free of halogenated solvents. To direct washwater to sanitary sewer systems or other treatment facilities, ensure that vehicle washing areas are impervious and are bermed.
- Dispose of all used oil, antifreeze, solvents and other such chemicals according to manufacturer instructions. These wastes require special handling and disposal. Used oil, antifreeze, and some solvents can be recycled at designated facilities, but other chemicals must be disposed of at a hazardous waste disposal site. Local government agencies can help identify such facilities.Inspection, Maintenance, and Removal Requirements.
- Inspect vehicles, equipment, and storage containers daily for leaks.
- Repair leaks immediately or remove problem vehicles or equipment from the project site.
- Keep ample supplies of spill cleanup materials onsite.
- Clean up spills and dispose of cleanup materials immediately.
- Disposal of all used oil, antifreeze, solvents and other automotive-related chemicals will be according to applicable regulations; at no time will any material be washed down the storm drain or in to any environmentally sensitive area.
- Maintenance of vehicle wash areas is minimal, usually involving repairs to berms and drainage to the sanitary sewer system.

SECTION FOUR:
EROSION CONTROL MEASURES

(Photo Credit: US EPA)

Mulching ..... (1 - 10)
Soil Preparation and Topsoiling ..... (1 - 11)
Seeding for Temporary Vegetative Cover ..... (1 - 5)
Seeding for Permanent Vegetative Cover ..... (1 - 11)
Sodding ..... (1 - 5)
Landscape Planting ..... (1 - 12)
Land Grading ..... (1 - 5)
Retaining Walls ..... (1 - 4)
Slope Protection ..... (1 - 10)
Surface Roughening ..... (1 - 3)
Branch Packing ..... (1 - 2)
Brush Layering ..... (1 - 3)
Brush Mattresses ..... (1 - 2)
Fascines ..... (1 - 3)
Fiber Rolls for Bio-Engineering ..... (1 - 2)
Live Crib Walls ..... (1 - 3)
Live Staking ..... (1 - 3)

Mulching

(Photo Credit: MACC ESC Guide)

Definition

- Application of suitable materials, (plant residues or other suitable materials) to the soil surface to provide short-term, medium-term, or permanent soil protection.

Purpose

- To enhance the environment for landscape plantings by preventing soil compaction, reducing evaporation, enhancing absorption of water, controlling weeds, providing protection against extreme heat and cold, and improving soil texture;
- To provide temporary cover for disturbed soil in areas where vegetative stabilization is either impractical or difficult to establish;
- To protect the soil surface and prevent erosion on a long-term basis by dissipating the erosive energy of raindrops, reducing the velocity of overland flow and encouraging infiltration.

Applicability

- Mulch is appropriate for sites that have been properly prepared as required in **Soil Preparation and Topsoiling.**
- Permanent mulch is appropriate where vegetative stabilization is either impractical or difficult to establish.
- Mulch is appropriate on seeded and planted areas where slopes are steeper than 2:1 or where sensitive seedlings require insulation from extreme temperatures or moisture retention.
- The duration of effectiveness of mulches varies depending on the type of mulch. Chemical mulches typically decompose in 60-90 days, organic mulch typically has a 3-4 month useful life, and others, such as wood chips, may take years to decompose.
- Loose mulches are suitable for flat or very gently rolling grades.
- Mulches manufactured as mats with netting or anchoring can be effective on steeper slopes and critical areas, such as those near waterways,

- Chemical mulches should only be used when use of other mulching materials is not feasible. Chemical mulches may be used alone from April 1 to June 15 and September 1 to October 15, provided they are used on areas with roughened slopes no steeper than 4:1. Chemical mulches may be used to bind other mulches or with wood fiber in hydro-seed slurry any time.
- Mulches are not applicable in areas of concentrated flows.

Note: Hay mulch may contain invasive or noxious seed or other materials that are not desirable in many applications.

Planning and Design Requirements – General

Mulch Definitions

Mulches can be utilized to provide short-term, medium term, or permanent soil protection. Mulching serves the common function of preventing erosion by providing a non-living cover to erodible surfaces. These measures are intended to dissipate the erosive energy of raindrops and are intended to promote the establishment and/or maintenance of a vegetative cover.

Mulches can be classified in three functional groups:

- Temporary Soil Protection is biodegradable mulch that is applied to a disturbed surface for the sole purpose of protecting the soil for less than 5 months when the establishment of a vegetative cover is not possible (usually during winter and mid-summer).
- Mulch for Seed measures also use biodegradable mulches but are intended for use when seeding.
- Landscape Mulch measures also use biodegradable mulches but are intended for use with landscape planting.

Erosion control blankets (ECBs) are biodegradable mulches that are manufactured with netting for anchoring to create a blanket that is used as a substitute for **Mulch for Seed** where mulch anchoring is needed, and may also be used as a substitute for **Temporary Soil Protection**. See **Appendix N** for information on ECBs.

Mulch Selection

Refer to **Figure 1. Mulching Selection Chart** for mulch selection based upon need (i.e. Temporary Soil Protection, Mulch for Seed; or Landscape Mulch).

General Application Considerations

Mulch may be applied to both seeded and unseeded areas. When applied to seeded areas, mulch shall be applied immediately after the area is seeded.

When temporary erosion control is needed, mulch may be applied anytime soil and site conditions are suitable for spreading and anchoring. Disturbed areas that will not have additional construction activity for 60 days or completed sites that will not be permanently seeded for periods of 60 days or longer should be mulched. Shorter time periods may be used depending on site conditions.

Mulches can be applied by hand, blown on by equipment, hydraulically applied or applied as a rolled product.

Figure 1. Mulching Selection Chart

Mulch Type	Exposure Period	How Applied	Limitations / Considerations
Temporary Soil Protection - temporary soil cover when seeding dates cannot be met			
straw/hay	0-6 months	by hand or blown by machine	• preferred over other mulches • requires anchoring in windy areas • hay will typically supply weed seeds, straw will not
cellulose fiber*	not recommended	not recommended	• used only as a tackifier for other mulch material
wood chips	> 1 year	by hand or graded by machine	• restricted to slopes 3 on 1 or flatter • must be removed or tilled into ground before seeding or planting • may reduce soil fertility during decay process requiring subsequent fertilization for plant growth • lasts longer than straw/hay • no anchoring required
bark chips / shredded bark	0-1 year	by hand	• same as wood chips
Mulch for Seed - temporary soil cover until seeds germinate and grow sufficiently to stabilize soil			
straw/hay	0-6 months	by hand or blown by machine	• requires anchoring in windy areas • hay will supply weed seeds, straw will not • may provide better shading against hot summer sun for seeding done at the beginning of summer
cellulose fiber*	0-6 months	sprayed in slurry with water	• no volunteer weed seeds, lawn seeding • wood fiber per unit cost generally more expensive than paper fiber, but requires less product for equivalent coverage • may be used in summer with seed only if adequate irrigation is planned
wood chips	not recommended	not recommended	not recommended
bark chips/ shredded bark	not recommended	not recommended	not recommended
Landscape Mulch - soil cover inhibiting weed growth around planted trees, shrubs & vines			
straw/hay	not recommended	not recommended	not recommended
cellulose fiber*	not recommended	not recommended	not recommended
wood chips	> 1 year	by hand or graded by machine	• may reduce soil fertility during decay process, requiring application of nitrogen • slippage may occur on steeper slopes if wood chips are applied over a large area
bark chips/ shredded bark	0-1 year	by hand	• same as wood chips

* see Specifications text on special concerns of various cellulose mulches

(Credit: *2002 Connecticut Guidelines for Soil Erosion and Sediment Control*)

Planning and Design Requirements -- Temporary Soil Protection

Materials

Materials include but are not limited to mulches, tackifiers, and nettings. They shall be:

- biodegradable or photodegradable within 2 years but without substantial degradation for 5 months;
- free of contaminants that pollute the air or waters of the State when properly applied;
- free of foreign material, coarse stems and any substance toxic to plant growth or which interferes with seed germination; and
- capable of being applied evenly such that it provides 100% initial soil coverage and still adheres to the soil surface, does not slip on slopes when it rains or is watered, does not blow off site, and dissipates raindrop splash.

Types of Mulches

Types of mulches within this specification include, but are not limited to:

- Hay: The dried stems and leafy parts of plants cut and harvested, such as alfalfa, clovers, other forage legumes and the finer stemmed, leafy grasses. The average stem length should not be less than 4 inches. Hay that can be windblown should be anchored to hold it in place.
- Straw: Cut and dried stems of herbaceous plants, such as wheat, barley, cereal rye, or brome. The average stem length should not be less than 4 inches. Straw that can be windblown should be anchored to hold it in place.
- Wood Chips: Chipped wood material from logs, stumps, brush or trimmings including bark, stems and leaves having a general maximum size of 0.5 inch by 2 inches and free of excessively fine or long stringy particles as well as stones, soil and other debris. No anchoring is required. If seeding is performed where wood chips have been previously applied, prior to the seeding the wood chips should be removed or tilled into the ground and additional nitrogen applied. Nitrogen application rate is determined by soil test at time of seeding (anticipate 12 lbs. nitrogen per ton of wood chips).
- Bark Chips, Shredded Bark: Tree bark shredded as a by product of timber processing having a general maximum size of 4 inches and free of excessively fine or long stringy particles as well as stone and other debris. Material use is the same as wood chips. Note: Wood and bark byproducts may generate contaminated runoff if improperly stored for extended periods. These materials should only be stored on free draining, gently sloping soils, and only for short periods of time.
- Other mulches: may also include corn stalks, leaves and other similar materials provided they meet the requirements of the materials section within this specification.
- Cellulose fiber mulches: Cellulose fiber is not recommended for use, except as a tackifier for other mulch materials. If subsequent seeding is performed where cellulose dense mulches (e.g. leaves, excelsior, woodchips, and barkchips) have been applied, then prior to seeding either remove the mulch or till it into the ground with the application of nitrogen.

Tackifiers

Tackifiers within this specification include, but are not limited to: Water soluble materials that cause mulch particles to adhere to one another, generally consisting of either a natural vegetable gum blended with gelling and hardening agents or a blend of hydrophilic polymers, resins,

viscosifiers, sticking aids and gums. Emulsified asphalts are specifically prohibited for use as tackifiers due to their potential for causing water pollution following its application.

Netting

Nettings within this specification include but are not limited to: Netting developed for erosion control may be used by itself on level areas and on slopes no steeper than 3:1. Prefabricated openwork fabrics made of cellulose cords, ropes, threads, or biodegradable synthetic material that is woven, knotted or molded in such a manner that it holds mulch in place until temporary soil protection is no longer needed. Examples of netting are tobacco netting (used where flows are not concentrated) and jute netting (typically used in drainageways).

Substitute Measures

Where tackifiers or nettings are needed to anchor mulch, a Temporary Erosion Control Blanket or Stone Slope Protection may be substituted, providing 100% of the disturbed soil is covered.

Installation Requirements -- Temporary Soil Protection

Site Preparation

Prior to mulching, complete the required grading and install and/or repair other sediment control measures needed to control water movement within the area to be mulched.

Application

Spreading

Spread mulch material uniformly by hand or machine resulting in 100% coverage of the disturbed soil.

When spreading hay mulch by hand, divide the area to be mulched into approximately 1,000 square feet and place 2 to 3 bales of hay in each section to facilitate uniform distribution.

When spreading woodchips on slopes, it is particularly important not to spread the chips too thick. Excessive applications tend to slip or slump when saturated. See **Figure 2** for suggested application rates of specific mulches when used as temporary soil protection.

Anchoring

Apply tackifiers and/or netting either with the mulch or immediately following mulch application. Expect the need for tackifiers or netting along the shoulders of actively traveled roads, hill tops and long open slopes not protected by wind breaks.

When using netting the most critical aspect is to ensure that the netting maintains substantial contact with the mulch and the mulch, in turn, maintains continuous contact with the soil surface. Without such contact, the material is useless and erosion can be expected to occur. Install in accordance with manufacturer's recommendations.

Figure 2 Suggested Temporary Soil Protection Application Rates for 100% Cover

Figure TSP–1 Suggested Temporary Soil Protection Application Rates for 100% Cover

Mulch	Rate
Hay/Straw	2 – 3 Tons/acre
Wood Chips/ Shredded Bark	6 cu. yds./1000 sq. ft.

(Credit: *2002 Connecticut Guidelines for Soil Erosion and Sediment Control*)

Inspection, Maintenance, and Removal Requirements -- Temporary Soil Protection

Inspect temporary soil protection area at least once a week and within 24 hours of the end of a storm with a rainfall amount of 0.5 inch or greater for mulch movement and rill erosion.

Where soil protection falls below 100%, reapply soil protection within 48 hours. Determine the cause of the failure. If mulch failure was the result of wind, consider applying a tackifier or netting. If mulch failure was caused by concentrating water, install additional measures to control water and sediment movement, repair erosion damage, reapply mulch with anchoring or use Temporary Erosion Control Blankets.

Inspections should take place until work resumes.

Planning and Design Requirements -- Mulch for Seed

Materials

Mulch for seed, including tackifiers and nettings used to anchor much, shall be:

- biodegradable or photodegradable within 2 years but without substantial degradation over a period of 6 weeks,
- free of contaminants that pollute the air or waters of the State when properly applied,
- free of foreign material, coarse stems and any substance toxic to plant growth or which interferes with seed germination, and
- capable of being applied evenly such that it provides 80%-95% soil coverage and still adheres to the soil surface, does not slip on slopes when it rains or is watered, does not blow off site, dissipates raindrop splash, holds soil moisture, moderates soil temperatures and does not interfere with seed growth.

Types of Mulches

Types of mulches within this specification include, but are not limited to:

- Hay: The dried stems and leafy parts of plants cut and harvested, such as alfalfa, clovers, other forage legumes and the finer stemmed, leafy grasses. Stem length should not average less than 4 inches. Hay that can be windblown must be anchored. Preferred mulch when seeding occurs outside of the recommended seeding dates.
- Straw: Cut and dried stems of herbaceous plants, such as wheat barley, cereal rye, or broom. The average stem length should not be less than 4 inches. Straw that can be

windblown should be anchored to hold it in place.

- Cellulose Fiber: Fiber origin is either virgin wood, post-industrial/pre-consumer wood or post consumer wood complying with materials specification (collectively referred to as "wood fiber"), newspaper, kraft paper, cardboard (collectively referred to as "paper fiber") or a combination of wood and paper fiber. Paper fiber, in particular, shall not contain boron, which inhibits seed germination. The cellulose fiber must be manufactured in such a manner that after the addition to and agitation in slurry tanks with water, the fibers in the slurry become uniformly suspended to form a homogeneous product. Subsequent to hydraulic spraying on the ground, the mulch shall allow for the absorption and percolation of moisture and shall not form a tough crust such that it interferes with seed germination or growth. Generally applied with tackifier and fertilizer. Refer to manufacturer's specifications for application rates needed to attain 80%-95% coverage without interfering with seed germination or plant growth. Not recommended for use as a mulch when seeding occurs outside of the recommended seeding dates.
- Other mulches: also include corn stalks and other similar organic materials provided they meet the requirements listed in the first paragraph of this section. Does not include materials such as wood chips, bark chips or cocoa hulls.

Tackifiers

Tackifiers within this specification include, but are not limited to: Water soluble materials that cause mulch particles to adhere to one another, generally consisting of either a natural vegetable gum blended with gelling and hardening agents or a blend of hydrophilic polymers, resins, viscosifiers, sticking aids and gums. Good for areas intended to be mowed. Cellulose fiber mulch may be applied as a tackifier to other mulches, provided the application is sufficient to cause the other mulches to adhere to one another. Emulsified asphalt is specifically prohibited for use as tackifier due to its potential for causing water pollution following its application.

Netting

Nettings within this specification include, but are not limited to: Prefabricated openwork fabrics made of cellulose cords, ropes, threads, or biodegradable synthetic material that is woven, knotted or molded in such a manner that it holds mulch in place until vegetation growth is sufficient to stabilize the soil. Generally used in areas where no mowing is planned. Examples of netting are tobacco netting (used where flows are not concentrated) and jute netting (typically used in drainageways).

Substitute Measures

Where mulch anchoring is required a Temporary Erosion Control Blanket may be used.

Installation Requirements - Mulch for Seed

Site Preparation

Follow requirements of Permanent Seeding or Temporary Seeding.

Application

Timing

Applied immediately following seeding. Some cellulose fiber may be applied with seed to assist in marking where seed has been sprayed, but expect to apply a second application of cellulose fiber to meet the requirements of Mulch for Seed.

Spreading

Mulch material shall be spread uniformly by hand or machine resulting in 80%-95% coverage of the disturbed soil when seeding within the recommended seeding dates. Applications that are uneven can result in excessive mulch smothering the germinating seeds. For hay or straw anticipate an application rate of 2 tons per acre. For cellulose fiber follow manufacturer's recommended application rates to provide 80%-95% coverage.

When seeding outside the recommended seeding dates, increase mulch application rate to provide between 95%-100% coverage of the disturbed soil. For hay or straw anticipate an application rate of 2.5 to 3 tons per acre.

When spreading hay mulch by hand, divide the area to be mulched into approximately 1,000 square feet and place 1.5-2 bales of hay in each section to facilitate uniform distribution.

For cellulose fiber mulch, expect several spray passes to attain adequate coverage, to eliminate shadowing, and to avoid slippage (similar to spraying with paint).

Machine clogging can occur if product is improperly loaded or if leftover product is left in machine without cleaning. Comply with the manufacturer's recommendations for application requirements and mulch material specifications.

Anchoring

When needed, mulch anchoring is applied either with the mulch as with cellulose fiber or applied immediately following mulch application. Expect the need for mulch anchoring along the shoulders of actively traveled roads, hill tops and long open slopes not protected by wind breaks.

When using netting, the most critical aspect is to ensure that the netting maintains substantial contact with the underlying mulch and the mulch, in turn, maintains continuous contact with the soil surface. Without such contact, the material is useless and erosion occurs. Install in accordance with manufacturer's recommendations.

Estimating Percent Mulch Cover

To estimate percent cover: (1) stake out 3 random a transect lines, (2) measure their total length, (3) walk the line observing mulch "cover" or "no cover" every 3 feet , (4) convert the number of "cover" points on the line to a percent of cover of the line (e.g., a 120 foot transect with 90 "cover" point is 90 out of 120 or 90/120 or 0.75 or 75% cover), (5) repeat twice, and average the results.

Inspection, Maintenance, and Removal Requirements – Mulch for Seed

Inspect mulched areas at least once a week and within 24 hours of the end of a storm with a rainfall amount of 0.5 inch or greater until the grass has germinated to determine maintenance needs

Where mulch has been moved or where soil erosion has occurred, determine the cause of the failure. If it was the result of wind, then repair erosion damage (if any), reapply mulch (and seed as needed) and consider applying a netting or tackifier. If mulch failure was caused by concentrating water, install additional measures to control water and sediment movement, repair erosion damage, reapply mulch and consider applying a netting or tackifier or use the **Temporary Erosion Control Blanket** measure.

Once grass has germinated, inspections should continue as required by Temporary Seeding and Permanent Seeding.

Planning and Design Requirements – Landscape Mulch

Materials

Mulch materials must be:

- biodegradable over a period of several years but without substantial degradation within 1 year;
- free of contaminants that pollute the air or waters of the State when applied;
- free of foreign material, and any substance toxic to plant growth; and
- capable of being applied evenly such that it provides 100% soil coverage and still adheres to the soil surface without a mulch anchor, does not slip on slopes when it rains or is watered, does not blow off site, dissipates raindrop splash, retains soil moisture, moderates soil temperatures and inhibits the growth of herbaceous plants.

Types of Mulches

Types of mulches within this specification include, but are not limited to:

- Wood Chips: Chipped wood material from logs, stumps, brush or trimmings including bark, stems and leaves having a general maximum size of 0.5 inch by 2 inches and free of excessively fine or long stringy particles as well as stones, soil and other debris.
- Bark Chips, Shredded Bark: Tree bark shredded as a by product of timber processing having a general maximum size of 4 inches and free of excessively fine or long stringy particles as well as stone and other debris.

  Note: Wood and bark byproducts may generate contaminated runoff if improperly stored for extended periods. These materials should only be stored on free draining, gently sloping soils, and only for short periods of time.

- May also include cocoa hulls and other similar materials provided they meet the requirements listed in the first paragraph of this section.
- Does not include materials such as hay or cellulose fiber that is used in Mulch for Seed measure.

Substitute Measures

Stone Slope Protection measure may be used as a substitute for Landscape Mulch. Use with caution due to concerns about heat absorption and light reflection.

Installation Requirements -- Landscape Mulch

Site Preparation

Follow requirements of **Landscape Planting** measure and/or **Tree Protection** measure.

Application

Timing

For trees and shrubs apply after the installation of any weed barrier and within 7 days after planting. For vines and ground covers apply after the installation of any weed barrier either before planting or within 7 days after planting. Periodic reapplication is necessary when the mulch has decayed sufficiently to expose underlying soil or when it no longer inhibits herbaceous growth.

Spreading

When spreading hay mulch by hand, divide the area to be mulched into approximately 1,000 square foot sections and place 1.5 -2 bales of hay in each section to facilitate uniform distribution.

Do not pile mulch against any tree or shrub trunk. Avoid excessive depths on slopes where mulch could slip when saturated.

Inspection, Maintenance, and Removal Requirements -- Landscape Mulch

Inspect 2 to 3 months after the first application and then once a year for mulch movement, rill erosion and decay.

Where mulch has been moved by concentrated waters, install additional measures to control water and sediment movement, repair erosion damage, remove any unwanted vegetation and reapply mulch.

If mulch has decayed exposing underlying soil, repair any erosion damage, remove any unwanted vegetation and reapply mulch.

References

NRCS RI's standard on mulching
http://efotg.sc.egov.usda.gov/references/public/RI/Mulching_(AC)_(484)_Practice_Standard_062011.pdf

RI Mulching Specification Guide
http://efotg.sc.egov.usda.gov/references/public/RI/Mulching_(AC)_(484)_Specificaion_Guide_122012.pdf

Soil Preparation and Topsoiling

(Photo Credit: US EPA)

Definition

- The spreading of topsoil of suitable quality and quantity over an area that has been cut, filled, or graded so that the area may be stabilized by vegetation.

Purpose

- To preserve, restore and/or amend soils in the post-development landscape to ensure that important biological, chemical and physical functions of the soil are maintained. Good topsoil serves as an excellent growth medium.
- To reduce the requirements for irrigation and the use of fertilizers, herbicides, and pesticides by providing high quality topsoil.

Applicability

- In general, where site conditions indicate the use of topsoil as the most effective means of providing a suitable growth medium;
- On slopes no steeper than 2:1;
- Where cut, filled or graded materials are unsuitable growth media. These materials are often sands or gravel that tend to be infertile and droughty;
- Where the existing soil material is too shallow to provide an adequate root zone and to supply necessary moisture and nutrients for plant growth;
- Where soils have been compacted to > 300 psi;
- Where high quality turf or landscape plantings are planned;
- Not suitable for slopes steeper than 2:1.

Planning and Design Requirements

Materials

Topsoil

In upland situations where native soils are either undisturbed or in agricultural management, topsoil refers to the surface layer (or in forests, the layer just below the surface duff layer) consisting of both mineral and organic components characterized as being darker than the subsoil due to the presence of humified organic matter. For these reasons, the topsoil is a major zone of root development.

> **Note**: This general rule does not apply to certain soils found in the Narragansett Basin of Rhode Island (e.g. the Newport or Pittstown series) where the high carbon content of the parent rock imparts a dark color. While dark in color, subsoils derived from these dark parent material soils serve as poor growth media unless amended with compost as the mineral form of carbon in the parent material does not provide the same functions as humified organic matter.

- All topsoil should support a biotic community (soil fauna and microbes) important for nutrient cycling, be a good medium for vegetative growth, water infiltration, and pollutant remediation (biofiltration). This requires: an adequate soil moisture holding capacity; adequate water infiltration and permeability rates and gas exchange rates; suitable carbon to nitrogen ratios; suitable pH; and the ability of the soil to adsorb and release plant nutrients. Therefore, topsoil should be tested by a certified soil testing laboratory and should meet the requirements given in **Figure 1** below.

Figure 1. Topsoil Analysis

Erosion Potential		
Factor	**Lower**	**Higher**
Soil Characteristics soil texture organic content soil structure soil permeability	gravel, coarse sands highly organic blocky sand/gravel	fine sands & silt no organic granular silt/clay
Vegetative Cover % cover type of cover	100% treed with groundcover/ mulch	0% no cover
Topography slope length slope gradient	short flat	long steep
Climate rainfall intensity rainfall frequency rainfall duration wind temperature	low intensity infrequent short duration calm frozen	high intensity frequent long duration gusty thawed
Special Case - Dewatering dewatering discharge velocities	low velocity	high velocity

(Credit: *2002 Connecticut Guidelines for Soil Erosion and Sediment Control*)

- Topsoil for turf applications must:
  - Have a minimum organic matter content of 5% organic matter dry weight (DW) content in turf areas,
  - Have a minimum thickness of four inches but it is recommended that up to eight inches of topsoil be used for turf applications except where tree roots limit the depth of incorporation of amendments.
  - Where feasible, prior to placement of the topsoil layer, the material that will become subsoil should be scarified at least 4 inches with some incorporation of the import topsoil to avoid creating a smooth stratified layer.
- Topsoil for planting applications must:
  - Have a minimum organic matter content of 10% dry weight (DW).
  - Be spread evenly upon the prepared subgrade surface to the depth specified in the plans for all planting beds or to a minimum thickness of 2 inches of organic material.

Native or on-site (non-amended) soils

Fertile and desirable soil material, typically stockpiled on-site, used to top-dress exposed subsoil or parent material, etc. with a soil organic matter (SOM) content between 5 and 10 percent by dry

weight (DW) and a pH that ranges from 5.5 to 8.0 or matching the pH of the original surrounding undisturbed soil.

On-site Amended Soils

On-site or existing soils that did not meet the organic or pH requirements and have had compost added.

Imported Amended Topsoil

Imported soil amended with compost. This material can be either pre-blended and brought on-site or the compost can be blended with soils stockpiled at the construction site.

Compost

Compost is a mixture of decayed and decaying organic matter, as from leaves and manure, used to improve soil structure and provide nutrients. Compost shall meet the definition of Class "A" Compost, as defined in Section 8.01 of the Solid Waste Regulation No. 8 from the State of Rhode Island and Providence Plantations, Department of Environmental Management, Office of Waste Management. The product shall:

- Be derived from plant material and provided by a member of the U.S. Composting Seal of Testing Assurance (STA) program.
- Be well-processed
- Meet the requirements given in **Figure 2**.

Figure 2. Acceptable Compost Specifications

Compost Parameter	Acceptable Range
Humified organic matter	35% to 65%
Carbon to nitrogen ratio	25:1
Soil texture	loamy sand to silty loam, screened (100% by volume must pass a 2 inch screen, 95% by volume must pass a 3/4 inch screen), loose and friable
pH	6.0 – 8.0
Moisture Content	between 35% and 55%
Soluble salts	<6.0 mmho/cm (mmho measures conductance)
Bulk Density	40 to 50 lbs/cu ft

(Credit: *2002 Connecticut Guidelines for Soil Erosion and Sediment Control*)

Inventory and Mapping

Preliminary determinations about the nature of the site and soil are important. For example, materials with engineering properties required to construct earth fills or slopes and subsoils exposed by excavation are often not suitable media to support the establishment of plant growth for vegetative soil stabilization.

Prior to developing a site development plan, inventory and map the existing soil resources following procedures found in Standards and Procedures for Site Specific Soil Mapping in Rhode Island.

Site investigations should be made to determine if there is sufficient topsoil of good quality to justify stripping. (Topsoil will be spread at a minimum depth of 4 inches.)

The application of topsoil must be scheduled so as not to delay seeding or sodding operations. This delay increases the exposure time of critical areas, thereby increasing maintenance cost of existing controls.

Soil Management Plan

In site planning, the option of topsoiling should be compared with that of preparing a seedbed in subsoil (see **Seeding for Permanent Vegetative Cover**; **Sodding; and Landscape Planting**). Limed and fertilized subsoils with proper seedbed preparation including compost amendments may provide an adequate growth medium.

Stripping, stockpiling and reapplying, importing topsoil, or manufacturing topsoil on-site can be expensive. If not carefully scheduled, the need to topsoil can delay seeding or sodding operations, extending the time of critical areas are exposed to potential erosion.

Develop a site specific Soil Management Plan (SMP) that avoids and minimizes impacts to important native soil resources and incorporates measures that mitigate for unavoidable impacts. The SMP may be used as part of the clearing and grading or construction permit application.

SMPs include the following information.

- A scale-drawing at a scale of 1” = 100’ or greater, (11” x 17” to 24” X36”) identifying areas where:
  - Native soil and/or vegetation will be preserved in place;
  - Topsoil or subsoil will be amended in place;
  - Topsoil will be stripped and stockpiled prior to grading for reapplication, and;
  - Imported Amended Topsoil will be applied.
- A completed SMP identifying <u>treatments and products to be used</u> to meet the soil depth and organic content requirements for each area.
- Computations of <u>compost volumes to be used</u> (and/or site soil to be stockpiled) to meet “pre-approved” amendment rates; or calculations by a qualified professional to meet organic content requirements if using custom calculated rates. Qualified professionals who have demonstrated experience in this area include certified/registered Agronomists, Soil Scientists or Crop Advisors; licensed Landscape Architects, Civil Engineers or Geologists, Certified Professionals in Erosion and Sediment Control (CPESC), and Certified Erosion, Sedimentation and Stormwater Inspectors (CESSWI).
- Copies of <u>laboratory analyses or manufactures’ guarantee for compost and topsoil</u> products to be used, documenting organic matter contents and carbon to nitrogen ratios.
- <u>Measures to preserve or enhance</u> the soil quality of the site, such as:
  - Protect areas of undisturbed native vegetation and soil outside of the limits of development to protect these areas from compaction during construction. The existing duff layer and native soil should be retained in an undisturbed state to the maximum extent practicable. In any areas requiring grading, remove and stockpile the duff layer and topsoil on site in a designated, controlled area, that is not adjacent to public resources and critical area. Reapply this material to portions of the site that will be revegetated after construction is complete.

- Where the native topsoil resource is inadequate it may be amended if needed to meet the organic matter or depth requirements. The compost amendment may be applied following the Amended Topsoil Specification or at custom rates based on the recommendations from soil laboratory tests of samples collected from the site.
- Alternatively, if insufficient topsoil is present on-site, use Imported Amended Soil to achieve a topsoil mix of sufficient organic content and depth.

Calculating Topsoil and Compost Needs

Topsoil

Topsoil needs can be calculated by using the values given in **Figure 3**.

Figure 3. Cubic Yards of Topsoil Required for Different Depths of Application

Depth Inches	Per 1000 Square Feet	Per Acre
4	12.4	537
5	15.5	672
6	18.6	806

(Credit: *2002 Connecticut Guidelines for Soil Erosion and Sediment Control*)

Compost

To determine the amount of compost needed to amend soils select one of the two methods below:

Method 1 - For compacted soils and soils within Hydrologic Soil Groups (HSGs) B, C or D, use the values in **Figure 4**.

Figure 4. Compost Requirement Based on Ratio of Contributing Impervious Cover (CIC) to Required Soil Amendment Area (SAA)

Ratio of Contributing Impervious Cover (CIC) : Required Soil Amendment Area (SAA) (in square feet)				
	CIC : SAA = 0 (1)	CIC : SAA = 0.5	CIC : SAA = 0.75	CIC : SAA = 1.0 (2)
Compost Added (inches)	2-4	3-6	4-8	6-10
Incorporation Depth (inches) (3)	6-10	8-12	15-18	18-24
Incorporation Method	Rototiller	Tiller	Subsoiler	Subsoiler

Notes:

(1) For amendment of compacted lawns that do not receive off-site runoff

(2) In general, IC/SA ratios greater than 1 should be avoided

(3) Shallower incorporation needed for B HSG soils, deeper incorporation needed for C/D HSG soils

(Credit: *2002 Connecticut Guidelines for Soil Erosion and Sediment Control*)

Once the area and depth of the compost amendments are known, the designer can estimate the total amount of compost needed, using the equation below.

C = A x D x 0.0031

Where: C = compost needed (cu. yds.)

A = area of soil amended (sq. ft.)

D = depth of compost added (in.)

<u>Method 2</u> - Compost Amendment Rate Calculator.

Once the targeted area where soils need to be amended is known, the Compost Amendment Rate Calculator from Soils **(Figure 18-5)** can be used. The Excel worksheet allows the user to input data on soil bulk density and organic matter, incorporation depth, and compost bulk density and organic matter, to identify a targeted final amount of compost to be used. The compost amendment calculator defaults at a soil incorporation depth of 8” and final targeted soil organic matter suitable for turf and planning beds, but these values can be adjusted based upon site conditions. The calculator also allows for costs of materials, if needed.

Figure 5. Example Compost Amendment Rate Calculator

	SBD	SOM%	FOM%	CBD	COM%	CAD	D	Area	Amount	Price	Cost
	Soil Bulk Density	Initial soil organic matter	Final target soil organic matter	Compost Bulk Density	Compost organic matter	**Compost application depth**	Depth compost is to be incorporated	Area to be covered	Calculated amount of compost to cover that area	Price of compost	Total cost for that amount of compost
	lb/cu. yd. dry weight	%	%	lb/cu. yd. dry weight	%	**inches**	inches	sq. ft.	cu. yds.	$/cu yd.	$
Example	2206	1	10	660	60	3.0	8	1000	9.3	$20.00	$185.50
default for turf areas	2010	0	5	660	60	**1.7**	**8**		0.0		$0.00
default for planting beds	2010	0	10	660	60	**3.0**	**8**		0.0		$0.00
enter your site's info here:						#DIV/0!			#DIV/0!		#DIV/0!

For more information, refer to Building Soil: Guidelines & Resources for Implementing Soil Quality and Depth BMP T5.13 in WDOE Stormwater Management Manual for Western Washington, pages 10-12 and 18-19.

Installation Requirements

Site Preparation

Before topsoiling, establish erosion and sediment control measures such as staked compost filled filter socks, silt fences, upslope diversions, grade stabilization structures, waterways, sediment basins, etc. These measures must be inspected regularly and maintained during topsoiling and until slopes are determined to be stabilized by vegetation.

Stripping

Stripping should be confined to the immediate construction area and equipment should avoid compacting areas that are not to be altered by construction. A 4-to 6-inch stripping depth is common, but depth may vary depending on the particular conditions at the site.

Stockpiling

Stockpile topsoil so that it meets specifications and does not interfere with work on the site. Topsoil should be stockpiled in such a manner that natural drainage is not obstructed and no off-site sediment damage results. In all cases, locate stockpiles to maximize distance from wetlands and/or watercourses.

Topsoil stripped from the worksite should be stockpiled for the shortest period possible. Shorter periods of stockpiling before placement of topsoil serve to maintain the soil flora, fauna and microbial communities which enhance the revegetation process. Stockpiling topsoil for long periods results in losses of biodiversity intrinsic to the soil.

If topsoil is to be stockpiled longer than 30 days, it must be protected with a temporary seeding, matting or other acceptable means of preventing erosion. Seeding the stockpiled soil also helps

preserve flora and microbial communities. Seed piles with an annual grass cover crop such as annual rye or winter wheat. Temporary seeding of stockpiles should be completed within 15 days of the formation of the stockpile, in accordance with the Temporary Vegetative Cover measure. If the stockpile is created outside of the growing season, mulch may be used as a protective cover. (See **Stockpile and Staging Area Management; Seeding for Temporary Vegetative Cover; Seeding for Permanent Vegetative Cover; Mulching** for application timing requirements).

Side slopes of the stockpile should not exceed 2:1 (2 horizontally to 1 vertically).

A perimeter sediment barrier should surround all topsoil stockpiles at least on the down slope side.

Grading

After topsoiling is complete, final grades should match those depicted on the approved plan.

Liming

Where the pH of the subsoil is 6.0 or less, ground agricultural limestone shall be spread in accordance with the recommendations provided with soil test results to attain a pH of 6.0 to 6.5 or to attain a pH as required by the vegetative establishment measure being used.

Discing and Scarifying to Ensure Bonding

Topsoil must not be installed over compacted subsoil or hardpan, as water trapped above the hardpan would flow along the junction between the soil layers, potentially causing the topsoil to slough. In such a setting the hardpan must be scarified prior to spreading topsoil to ensure adequate bonding.

When required, incorporate uniformly one to three inches of compost within the top four to six inches of the soil profile (three to twelve cubic yards per 1000 square feet). Use a higher rate for upgrading marginal soils.

Topsoil and subsoil must be able to be properly bonded, or water may not permeate through the soil profile evenly which could result in inadequate vegetation establishment. After the areas to be topsoiled have been brought to prefinished grade, and immediately prior to spreading the topsoil, the subgrade should be loosened by discing, scarifying, or tracking to a depth of at least 2 inches to ensure bonding of the topsoil and subsoil. For a tracking description, see **Surface Roughening**.

Applying Topsoil in General

Distribute the topsoil uniformly to a minimum compacted depth of 4 inches. Maintain approved grades when spreading topsoil. Any irregularities in the surface resulting from topsoiling or other operations should be corrected in order to prevent the formation of depressions or water pockets.

For slopes 2:1 through 5:1, slope tracking is required prior to the placement of topsoil to improve bonding (see **Surface Roughening** .

Topsoil should not be placed while in a frozen or muddy condition, when the subgrade is excessively wet, or in a condition that may otherwise be detrimental to proper grading or proposed sodding or seeding.

Stabilizing Topsoil

Topsoil should be planted and mulched as soon as possible after installation.

It is necessary to compact the topsoil enough to ensure good contact with the underlying soil and to obtain a uniform firm seedbed for the establishment of a high maintenance turf. However, undue compaction is to be avoided as it increases runoff velocity and volume, and prevents seed germination.

Immediately following topsoil applications, protect the topsoil from erosion by either sodding, seeding and/or mulching (see measures in the **Vegetative Cover Section**).

Water thoroughly after seeding or sodding.

Newly seeded areas can be top-dressed with a fine compost (<3/8 inch), and then watered.

Mulch or its equivalent should be left on the soil surface to replenish organic matter.

Inspection, Maintenance, and Removal Requirements

Inspection

Inspection may be made by qualified individuals who submit signed certification that the approved SMP had been implemented. Qualified individuals who have demonstrated experience in this area include certified/registered Agronomists, Certified/Registered Professional Soil Scientists or Certified Crop Advisors; licensed Landscape Architects, Civil Engineers or Geologists, Certified Professionals in Erosion and Sediment Control (CPESC), and Certified Erosion, Sedimentation and Stormwater Inspectors (CESSWI)

The following is an outline of a preferred inspection schedule and tasks (depending on local resources and procedures, the inspection tasks may be consolidated into fewer visits).

- Pre-Grading Inspection: Prior to the commencement of site work, contact the Applicant (Owner/Operator) to provide an inspection to verify the delineation and protection of native soils and vegetation to remain undisturbed per the SMP, and to verify the proposed location for topsoil and material stockpiling.
- Grading Progress Inspection: Prior to the placement of soil amendments, contact the Applicant (Owner/Operator) to provide an inspection to verify that specified erosion control methods have been implemented, the location of stockpiled soil and materials follow the Soil Management Plan, and that subgrades are consistent with the Soil Management Plan.
- Post-Construction Inspection: Prior to planting, contact the Applicant (Owner/Operator) to provide an inspection to verify that the placement of amendments and soil preparation is consistent with the SMP. Delivery tickets for soil amendments should verify the type and quantity of material specified on the SMP. Verify appropriate soil compaction, scarification and amendment incorporation by digging at least one 12 inch deep test hole per acre for turf and at least one per acre for planting beds using a garden spade driven solely by inspector's weight (less then 80 psi) or 10 locations per landscaped acre using a simple "rod penetrometer" (a 4 foot long 3/8th inch diameter stainless steel rod, with and a 30 degree bevel cut). Rod must penetrate to 12" depth driven solely by inspector's weight – less then 80 psi.
- At the completion of planting, contact the Applicant (Owner/Operator) to provide a review to verify that mulch has been installed as specified.
- Secondary Verification for Failing Sites: If the Applicant (Owner/Operator) determines that the installation does not meet the conditions of the approved SMP, additional testing by an independent certified soil consultant will be ordered by the Applicant (Owner/Operator). A report from the soil consultant certifying deficient work has been completed consistent with the SMP must be filed and accepted by the Applicant (Owner/Operator) prior to site planting.

- Certified soil consultants include qualified individuals who have demonstrated experience in this area include certified/registered Agronomists, Certified/Registered Professional Soil Scientists or Certified Crop Advisors; licensed Landscape Architects, Civil Engineers or Geologists, Certified Professionals in Erosion and Sediment Control (CPESC), and Certified Erosion, Sedimentation and Stormwater Inspectors (CESSWI)

Maintenance

Once topsoiling has been established, these areas should be protected from compaction such as from heavy equipment operation and soil loss by erosion.

Seeding for Temporary Vegetative Cover

(Photo Credit: MACC ESC Guide)

Definition

- Establishment of temporary vegetative cover (grass and/or legumes) on soils exposed for a period greater than one month but less than 12 months.

Purpose

- To stabilize the soil with vegetation for one to 12 months.
- To reduce damage from wind and/or water erosion and sedimentation until permanent stabilization is achieved.

Applicability

- On exposed soils that have the potential for producing sediment and causing on-or off-site damages. Such areas may include road banks, stockpiles, borrow pits as well as other unstable or disturbed areas.
- Following soil preparation and topsoiling as required in **Soil Preparation and Topsoiling.**
- Not for stabilizing areas that are to be left inactive for more than one year.

Planning and Design Requirements

- Plan to use species appropriate for the site, soil, and climatic conditions.
- Planting dates and methods in concert with proper handling of the seed shall occur to ensure satisfactory rates of survival.
- Only seed labeled in accordance with the provisions of the Rhode Island Seed Act of 1956 (Volume 8, Title 2, Chapter 6) and its amendments shall be used.
- Seeding rates and methods will include species that will establish quickly and seed has been germination tested within the past 12 months, and germination percentage is within the acceptable range for the species.

Installation Requirements

Site Preparation

- Install needed erosion control measures such as diversions, grade stabilization structures, sediment basins and grassed waterways.
- Grade as needed and feasible to permit the use of equipment for seedbed preparation, seeding, mulch application, and mulch anchoring.

Seedbed Preparation

Loosen the soil to a depth of three to four inches with a slightly rough surface. This preparation may be accomplished by raking, discing, dragging a section of chain link fence and/or traversing the area with tracked equipment. Over compaction should be avoided and tracked equipment cleat marks shall be perpendicular to the anticipated direction of surface water flow.

Soil Amendments

Apply limestone and fertilizer according to soil test recommendations such as those offered by the University of Rhode Island Soil Testing Laboratory or other reliable sources. A pH range of 6.2 to 7.0 is optimal for plant growth of most grass species. If soil testing is not feasible on small or variable sites, or where timing is critical, fertilizer may be applied at the rate of 300 pounds per acre or 7.5 pounds per 1,000 square feet using fertilizer of the following analysis.

- 10 percent available Nitrogen (N)
- 10 percent available Phosphoric Acid (P)
- 10 percent available Potassium (K)

Fertilizer should always be applied to meet the requirements of the site. The addition of surplus nitrogen may cause pollution of drinking water and saltwater ecosystems. Excessive phosphorus may accelerate the aging process of freshwater ecosystems. Excessive amounts of N and K may result in 'burning' the grass and killing it. Listed in order, N-P-K (Nitrogen- Phosphorus-Potassium) are the three most abundant ingredients listed on a fertilizer label. Most fertilizers are simple compounds with nitrogen synthesized from the atmosphere to create ammonia and urea. Phosphate and potassium (potash) are obtained from naturally occurring mined deposits.

Nutrients should be primarily slow release whether synthetic or organic, and if the site is not to be fertilized after establishment then 3-4 lbs slow release nitrogen per 1000 square feet is necessary to prevent nutrient deficiency and plant death. Slow release nutrients are not salt-based, and so will not burn grass. Slow release nitrogen is also known as water-insoluble nitrogen. Class A biosolids should be considered as a source of inexpensive slow-release nutrients for roadsides and other areas with minimal pedestrian traffic.

Understanding Fertilizer Labels

Fertilizer labels typically include three numbers which refers to the percentage of primary nutrients of N, P, and K found in the container. For example, a bag of 20-10-10 analysis fertilizer contains 20 percent nitrogen, 10 percent phosphorus and 10 percent potassium. Therefore, a 50-pound bag of 20-10-10 analysis fertilizer would contain 10 pounds of nitrogen, 5 pounds of phosphorous, and 5 pounds of potassium.

The total weight of the nitrogen, phosphate, and potassium will never equal the total weight of the fertilizer container. The remainder of the contents in a fertilizer container are comprised of a mixture of one or more secondary nutrients (i.e., sulfur, magnesium, and calcium), or trace elements (i.e., boron, chlorine, copper, iron, manganese, molybdenum, and zinc), and a filler material (typically granular limestone or sand).

Calculating Fertilizer Application Rates

Generally the formula for calculating how much fertilizer to apply to a given area for a specific amount of nutrient is:

(Pounds of nutrient needed) / (Percent nutrient in the fertilizer) = Pounds of fertilizer

Fertilizer "rate" often refers to two things:

- The desired lbs of actual nutrient per acre
- The desired lbs of fertilizer material per acre necessary to achieve the lbs of nutrient per acre goal

Example

A one-half acre lawn area needs 40 pounds of Nitrogen per acre to achieve vigorous, green growth. The supplier has 10-10-10 in 50 pound bags. 10-10-10 has 10% of each N, P, and K in the bag. Based on the fact that there are 40 lbs. of N needed per acre, divide by 10% (0.1) to calculate 400 lbs. of fertilizer for one acre. Divide by two (2) to determine the amount needed for ½ acre. 200 lbs of fertilizer or four (4) fifty pound bags of 10-10-10 fertilizer will be needed for that ½ acre lawn.

Apply limestone (equivalent to 50 percent calcium plus magnesium oxide) using the rates given in **Figure 1**.

Figure 1. Soil Textures and Liming Rates

Soil Texture	Tons Lime/Acre	Pounds Lime/1,000sq. ft.
Clay, clay loam, and high organic soil	3	135
Sandy loam, silty loam	2	90
Loamy sand, sand	1	45

(Credit: *2002 Connecticut Guidelines for Soil Erosion and Sediment Control*)

Seeding

Select seed using recommendation give in **Figure 2**. Apply seed uniformly by hand, cyclone seeder, drill, cultipacker type seeder or hydroseeder (slurry including seed and fertilizer) achieving good seed to soil contact. Hydroseedings, which includes mulch, may be left on the soil surface. Seeding rates must be increased 10 percent when hydroseeding.

Mulching

Apply mulch according to **Mulching**.

Irrigation

Irrigation/watering may be necessary to establish newly seeded areas should drought conditions occur after emergence of seed. Irrigation/watering should not exceed the application rate of the soil and result in erosion.

Inspection, Maintenance, and Removal Requirements

Seeded areas should be inspected at least once per week and within 24 hours following a precipitation event with a rainfall amount of 0.25 inch or greater for erosion and seed and mulch movement.

Where erosion has occurred or seed has moved, the cause of the failure should be identified and the area reseeded and remulched. If wind was the cause of the movement, the erosion damage should be repaired (reseed and remulch) and supplemented with a mulch anchor. Should concentrated runoff be the cause of the failure, additional measures to control water and sediment movement should be installed, the erosion damage repaired, and the area reseeded with the new mulch and anchoring or use temporary Erosion Control Blanket. Caution should be used when using synthetic products as they may be difficult to remove prior to the establishment of permanent vegetative cover.

Temporary vegetative cover shall not be considered established until ground cover (approximately 80% vegetative surface cover) controls soil erosion and withstands severe weather conditions.

References

Suggested for end of Chapter additional resources- RI Plant Hardiness Zones
http://efotg.sc.egov.usda.gov/references/public/RI/RI_Plant_hardiness_Zones_map.pdf RI Plant

Hardiness Zones – ArcGIS map http://www.arcgis.com/home/webmap/viewer.html

http%3A%2F%2Fmaps.edc.uri.edu%2Farcgis%2Frest%2Fservices%2FNRCS%2FPlant_Hardiness_Zones_2012%2FMapServer&source=sd

Figure 2. Seeding Rates and Dates for Establishing Temporary Vegetative Cover

Species[4]	Seeding Rates (pounds) /Acre	Seeding Rates (pounds) /1000 sq. ft.	Optimum Seed Depth[2] (inches)	Optimum Seeding Dates[1] (3/15 4/15 5/15 6/15 7/15 8/15 9/15 10/15; 3/1 4/1 5/1 6/1 7/1 8/1 9/1 10/1)	Plant Characteristics
Annual ryegrass	40	1.0	0.5		May be added in mixes. Will mow out of most stands
Perennial ryegrass	40	1.0	0.5		Use for winter cover. Tolerates cold and low moisture.
Winter Rye	120	3.0	1.0		Quick germination and heavy spring growth. Dies back in June with little regrowth.
Oats	86	2.0	1.0		In northern RI, will winter kill with the first killing frost and may throughout the state in severe winters.
Winter Wheat	120	3.0	1.0		Quick germination and heavy spring growth. Dies back in June with little regrowth.
Millet	20	0.5	1.0		Warm season small grain. Dies with frost in September.
Sudangrass	30	0.7	1.0		Tolerates warm temperatures and droughty conditions.
Buckwheat	15	0.4	1.0		Hardy plant that will reseed itself and is good as a green manure crop.
Weeping lovegrass	5	0.2	0.25		Warm-season perennial. May bunch. Tolerates hot, dry slopes, acid infertile soils Excellent nurse crop. Usually winter kills.
RIDOT Temporary Seed Mix[3]	150	3.5	0.5		Suitable for all conditions

[1] May be planted throughout summer if soil moisture is adequate or can be irrigated. Fall seeding may be extended 15 days in the coastal towns.

[2] Seed at twice the indicated depth for sandy soils.

[3] See Permanent Seeding Fiqure PV-3 for seeding mixture requirements.

[4] Listed species may be used in combinations to obtain a broader time spectrum. If used in combinations, reduce each species planting rate by 20% of that listed.

Source: USDA-NRCS and CT Guidelines for Soil Erosion and Sediment Control

(Credit: *2002 Connecticut Guidelines for Soil Erosion and Sediment Control*)

Seeding for Permanent Vegetative Cover

(Photo Credit: US EPA)

Definition

- Establishment of permanent vegetative cover by seeding and mulching exposed soils with an appropriate seed mixture to facilitate long term stabilization following site preparation and topsoiling.

Purpose

- To permanently stabilize disturbed or erodible soils with a vegetative cover.
- To prevent the separation and transport of sediment by water, wind and/or gravity.

Applicability

- On sites with disturbed or erodible soils (vegetation removed, topsoil disturbed or soil compacted).
- On sites where the suspension of work is expected to exceed one year.
- On sites where slopes less than 100 feet long and 2:1 or flatter have been disturbed.
- Following soil preparation and topsoiling as required in **Soil Preparation and Topsoiling.**
- Not for bedrock cuts or faces.

Note: For slopes steeper than 2:1, see the slope stabilization measures.
Note: Appropriate coastal species must be used in coastal settings.

Planning and Design Requirements

- Plan to use native species appropriate for the site conditions, soil and climatic conditions.
- Only use seed that is labeled in accordance with the provisions of the Rhode Island Seed Act of 1956 (Volume 8, Title 2, Chapter 6) and its amendments.
- The seeding rates and methods shall require use of seed that has been germination tested within the past 12 months and meets acceptable levels for the species.

- Planting dates and methods in concert with proper handling of the seed shall occur to ensure satisfactory rates of survival.
- Mowing may be needed during establishment period to reduce completion from broadleaf weeds.
- Where appropriate, permanent vegetative cover shall be established in phases; that is, as work is completed on upslope areas, vegetation is established to stabilize these areas. An example of phased seeding is the establishment of vegetation on cut and fill slopes every 15 feet vertically or 30 feet horizontally.
- Should the project fall within the area identified in Federal Aviation Administration Advisory Circular 150/5200-33B (Hazardous Wildlife Attractants on or Near Airports) a grass seed that is unattractive to wildlife should be considered. Tall fescue, a bunch forming grass commonly infected with an endophyte may be a favorable turfgrass variety to use to deter wildlife.

Installation Requirements

Intended Use

The ultimate use and maintenance requirements of the area shall be considered when choosing a permanent seed mixture identified in **Figure 1 and 3**. Maintenance may be categorized as active (area will be mowed) and passive (area will not be mowed). Active maintenance will require some level of mowing depending on the intended use while Passive maintenance will require no further mowing and little, if any maintenance.

Time of Year

For non-native species the recommended seeding dates are: April 1 through June 15 and August 15 through September 30. The final seeding date may be extended 15 days in Newport County. For native species seeding dates for best results are August to September. Selecting seed materials and timing of seeding is critical. If native seeds are to be selected and time of seeding is not ideal for sodding, then temporary seeding may be done to protect the site until optimum seeding dates can be reached.

Site Preparation

Install needed erosion control measures (such as, Diversions; Grade Stabilization Structures; Temporary Sediment Basins; and Vegetated Waterways).

The site's intended use, in concert with the existing soil fertility, will determine if topsoil is needed. The lower the site is in natural soil fertility and texture the greater the need for topsoil.

Grade as needed and feasible to permit the use of conventional equipment for seedbed preparation, seeding, mulch application and anchoring, and maintenance. All grading should be done in accordance with the guidelines in **Land Grading.**

Prepare the site in accordance with Measure 13, Soil Preparation and Topsoiling.

Permanent seeding should not occur on slopes steeper than 2:1. Slopes steeper than 2:1 may develop shallow or deep surface failures under saturated conditions. Therefore, to ensure soil stability a site investigation is necessary to determine if other measures (i.e. benching, structural) are needed prior to seeding.

Seedbed Preparation

Loosen the soil to a depth of three to four inches with a slightly rough surface. This preparation may be accomplished by raking, discing, dragging a section of chain link fence and/or traversing

the area with tracked equipment. Over compaction should be avoided and tracked equipment cleat marks shall be perpendicular to the anticipated direction of surface water flow.

Apply topsoil, if necessary, in accordance with **Soil Preparation and Topsoiling.**

Soil Amendments

Apply limestone and fertilizer according to soil tests such as those offered by Soil Testing Laboratories at the University of Connecticut and the University of Massachusetts or other reliable source. In general, it is desirable to minimize the use of fertilizers in areas adjacent to all wetlands and surface waters so as to prevent the eutrophication of these waters.

If soil testing is not feasible on small or variable sites, or where timing is critical, slow release fertilizer may be applied at the rate not to exceed 1500 pounds per acre or 36 pounds per 1,000 square feet using the following percentages by weight.

- 10% available Nitrogen (N)
- 20% available Phosphoric Acid (P)
- 20% available Potassium (K)

A pH range of 6.2 to 7.0 is optimal for plant growth of most grass species. Apply ground limestone (equivalent to 50 percent calcium plus magnesium oxide) using rates given in **Figure 2**.

With the exception of hydroseeding, work lime and fertilizer into the soil as practical to a depth of 4 inches with a disc, spring tooth harrow or other suitable equipment. The final harrowing or discing operation should be on the general contour. Continue tillage until a reasonably uniform, fine seedbed is prepared. All but clay or silty soils and coarse sands should be rolled to firm the seedbed wherever feasible.

Remove from the surface all stones two inches or larger in any dimension. Remove all other debris, such as wire, cable, tree roots, pieces of concrete, clods, or other unsuitable material.

Areas not to be mowed can be tracked with cleated earthmoving equipment perpendicular to the slope (see **Surface Roughening**).

In areas where temporary Erosion Control Blankets are to be used the seed bed shall be prepared in accordance with the blanket's manufacturer's recommendations.

Inspect seedbed just before seeding. If soil is compacted, crusted or hardened, scarify the area prior to seeding.

Timing

Seed with a permanent seed mixture within seven days following the establishment of final grade or when grading work within the limit of disturbance is to be suspended for a period of more than one year.

Seeding

- Apply selected seed at rates provided in **Figure 3** uniformly by hand, cyclone seeder, drill, cultipaker type seeder or hydroseeder (slurry including seed, fertilizer) achieving good seed to soil contact. Where relatively small areas are to be seeded with a premix, that is, less than 2 acres and where the purchase of large volumes of seed are unnecessary, seed mix No. 1, is recommended. Inoculate all legume seed with the correct type and amount of inoculant.
- Normal seeding depth is from 0.25 to 0.5 inch. Hydroseedings which are mulched may be left on the soil surface.
- Where feasible, except where either a cultipacker type seeder or hydroseeder is used, the seedbed should be firmed following seeding operations with a roller, or light drag.

Seeding operations should be on the contour.

- Frost crack seeding can be used to improve the density of permanent seeding. Frost crack seeding must be done in late winter or early spring. Suitable weather conditions are freezing nights and thawing days with little or no snow cover.
- Seeding rates should be increased by 10% when frost cracking or hydroseeding is used.
- Hydraulic application (hydroseeding) is a suitable method except on severely steep slopes. When hydroseeding, a seedbed is prepared in the conventional way or by hand raking to loosen and smooth the soil and to remove surface stones larger than two inches in diameter. Generally, slopes greater than 2:1 are not recommended. Where slopes exceeding 2:1 are unavoidable, supplemental mulch, matting and/or structural erosion controls are recommended.
- Lime should be applied and thoroughly incorporated into the soil prior to seeding. Fertilizer may be applied simultaneously with the seed. Use of straw mulch held with adhesive materials or 500 lbs per acre of wood fiber mulch is recommended for protection from soil erosion. Whole wood mulch is recommended. The recommended rate for hydromulch is 1,500 lbs per acre on flats and 3,000 lbs per acre on slopes. Seeding rates must be increased 10% when hydroseeding.
- Apply mulch according to **Mulching**.
- If seeding cannot be done within the seeding dates, use the **Mulching** measure to protect the site and delay seeding until the next recommended seeding period.

Irrigation

Irrigation/watering may be necessary to establish newly seeded areas should drought conditions occur after emergence of seed. Irrigation/watering should not exceed the application rate of the soil and result in erosion.

Inspection, Maintenance, and Removal Requirements

- Lime according to a soil test or at a minimum every 2 to 3 years using a rate of one ton per acre (50 lbs per 1,000 sq. ft.).
- Where grasses predominate, fertilize if so indicated by a soil test. Customary applications are biennial broadcasts of 500 lbs of 10-6-4 (lawn fertilizer) or equivalent per acre (12.5 lbs per 1,000 sq. ft.). At least 30% of the fertilizer's available nitrogen must be in a slow releasing form.
- Where legumes predominate, fertilize according to a soil test or every three years, broadcast 300 lbs of 0-20-20 or equivalent per acre (7.5 lbs per 1,000 sq. ft.).
- Permanent vegetative cover shall not be considered established until ground cover (approximately 95% vegetative surface cover) controls soil erosion and withstands severe weather conditions.

Figure 1. Selecting Seed Mix to Match Need

Area To Be Seeded	Mixture Number [1]	
	Mowing Desired	Mowing Not Required
Borrow areas, roadsides, dikes, levees, pond banks and other slopes and banks		
A) Well or excessively drained soil [2]	1, 2, 3, 4, 5, 8 or 14	5, 6, 7, 8, 9, 10, 11, 12, 13, 16, 22
B) Somewhat poorly drained soils [2]	2	5, 6
C) Variable drainage soils [2]	2	5, 6, 11
Drainage ditch and channel banks		
A) Well or excessively drained soil [2]	1, 2, 3 or 4	9, 10, 11, 12
B) Somewhat poorly drained soils [2]	2	
C) Variable drainage soils [2]	2	
Diversions		
A) Well or excessively drained soil [2]	2, 3 or 4	9, 10, 11
B) Somewhat poorly drained soils [2]	2	
C) Variable drainage soils [2]	2	
Effluent disposal		5 or 6
Gravel pits [3]		26, 27, 28
Gullied and eroded areas		3, 4, 5, 8, 10, 11, 12
Mine spoil & waste and other spoil banks (if toxic substances & physical properties not limiting)		15, 16, 17, 18, 26, 27, 28
Shorelines (fluctuating water levels)		5 or 6
Slopes		4, 10
Sod waterways and spillways	1, 2, 3, 4, 6, 7 or 8	1, 2, 3, 4, 6, 7, or 8
Sunny recreation areas (picnic areas and playgrounds or driving and archery ranges, nature trails, airfields)	1, 2, 20, 23, 24	
Camping and parking, nature trails (shaded)	19, 21 or 23	
Sand dunes (blowing sand)	25	
Woodland access roads, skid trails and log yarding areas		9, 10, 16, 22, 26
Lawns and high maintenance areas	1, 19, 21 or 29	

(Credit: *2002 Connecticut Guidelines for Soil Erosion and Sediment Control*)

References

Suggested for end of Chapter additional resources- RI Plant Hardiness Zones
http://efotg.sc.egov.usda.gov/references/public/RI/RI_Plant_hardiness_Zones_map.pdf RI Plant

Hardiness Zones – ArcGIS map http://www.arcgis.com/home/webmap/viewer.html
http%3A%2F%2Fmaps.edc.uri.edu%2Farcgis%2Frest%2Fservices%2FNRCS%2FPlant_Hardiness_Zones_2012%2FMapServer&source=sd

1) The numbers following in these columns refer to seed mixtures in Figure PV-3. Mixes for shady areas are in ***bold-italics*** print (including mixes 20 through 23)

2) See county soil survey for drainage class. Soil surveys are available from the Natural Resources Conservation Service Office and RI Department of Environmental Management Environmental Resource Map.

3) Use mix 26 when soil passing a 200 mesh sieve is less that 15% of total weight. Use mix 26 & 27 when soil passing a 200 mesh sieve is between 15 and 20% of total weight. Use mix 26, 27 & 28 when soil passing a 200 mesh sieve is above 0% of total weight.

Figure 2. Soil Texture vs. Liming Rates

Soil Texture	Tons/Lime of acre	Pounds/Lime per 1000 Sq. Ft.
Clay, clay loam and high organic soil	3	135
Sandy loam, silt loam	2	90
Loamy sand, sand	1	45

(Credit: *2002 Connecticut Guidelines for Soil Erosion and Sediment Control*)

Figure 3. Seed Mixtures for Permanent Seeding

No.	Seed Mixture (variety)	Lbs/Acre	Lbs/1000 sq. ft.
1[4.10]	Kentucky Bluegrass Creeping Red Fescue (Pennlawn, Wintergreen) Perennial Ryegrass (Norlea, Manhatten)	22.5 105 22.5 Total: 150	.5 2.5 .5 Total: 3.5
2[10]	Creeping Red Fescue (Pennlawn, Wintergreen) Redtop (Streeker, Common) Tall Fescue (Kentucky 31) or Smooth Bromegrass (Saratoga, Lincoln)	20 2 20 Total: 42	.45 .05 .45 Total: .95
3[10]	Creeping Red Fescue (Pennlawn, Wintergreen) Bird's-foot Trefoil (Empire, Viking) with inoculant[1] Tall Fescue (Kentucky 31) or Smooth Bromegrass (Saratoga, Lincoln)	20 8 20 Total: 48	.45 .20 .45 Total: 1.10
4[10]	Creeping Red Fescue (Pennlawn, Wintergreen) or Tall Fescue (Kentucky 31) Redtop (Streeker, Common) Bird's-foot Trefoil (Empire, Viking) with inoculant[1]	20 2 8 Total: 30	.45 .05 .20 Total: .70
5[10.12]	White Clover Perennial Rye Grass	10 2 Total: 12	.25 .05 Total: .30
6[10.12]	Creeping Red Fescue Redtop (Streeker, Common) Perennial Rye Grass	20 2 20 Total: 42	.50 .05 .50 Total: 1.05
7[5.10]	Creeping Red Fescue Perennial Rye Grass (Norlea, Manhatten) Bird's-foot Trefoil (Empire, Viking) with inoculant[1] [9]	105 22.5 22.5 Total: 150	2.5 .5 .5 Total: 3.5
8[11]	Switchgrass (Blackwell, Shelter, Cave-in-rick) Weeping lovegrass Little Bluestern (Blaze, Aldous, Camper)	10 3 10 Total: 23	.25 .07 .25 Total: .57

Figure 3 (cont'd). Seed Mixtures for Permanent Seeding

No.	Seed Mixture (variety)	Lbs/Acre	Lbs/1000 sq. ft.
9[10]	Creeping Red Fescue (Pennlawn, Wintergreen) Crown Vetch (Chemung, Penngift) with inoculant[1] (or Flatpea (Lathco) with inculant)[1] Tall Fescue (Kentucky 31) or Smooth Bromegrass (Saratoga, Lincoln) Redtop (Streeker, Common)	10 15 (30) 15 2 Total: 42 (or 57)	.25 .35 (.75) .35 .05 Total: 1 or (1.40)
10[10]	Creeping Red Fescue (Pennlawn, Wintergreen) Redtop (Streeker, Common) Crown Vetch (Chemung, Penngift) with inoculant[1] (or Flatpea (Lathco) with inculant)	20 2 15 (30) Total: 37 (or 52)	.45 .05 .35 (.75) Total: .85 or (1.25)
11[10]	Bird's-foot Trefoil (Empire, Viking) with inculant[1] Crown Vetch (Chemung, Penngift) with inculant[1] Creeping Red Fescue (Pennlawn, Wintergreen) or tall Fescue (Kentucky 31) or Smooth Bromegrass (Saratoga, Lincoln)	8 15 20 Total: 43	.20 .35 .45 Total: 1.00
12[7.11]	Switchgrass (Blackwell, Shelter, Cave-in-rock) Perennial Ryegrass (Norlea, Manhatten) Hard Fescue	12 12 15 18 Total: 60[2]	.2 .4 .25 .5 .25 .5 .3 .6 Total: 1 to 2[2]
13[11]	Crown Vetch (Chemung, Penngift) with inoculant[1] (or (Flatpea (Lathco) with inoculant)[1] Switchgrass (Blackwell, Shelter, Cave-in-rock) Perennial Ryegrass (Norlea, Manhatten)	10 (30) 51 5 Total: 20 (or 40)	.25 (.75) .10 .10 Total: .45 (or .95)
14[10]	Crown Vetch (Chemung, Penngift) with inoculant[1] (or (Flatpea (Lathco) with inoculant)[1] Perennial Ryegrass (Norlea, Manhatten)	15 (30) 10 Total: 25 (or 40)	.35 (.75) .25 Total: .60 (or 1.00)
15[11]	Switchgrass (Blackwell, Shelter, Cave-in-rock) Big Bluestem (Niagra, Kaw) or Little Bluestem (Blaze, Aldous, Camper) Perennial Ryegrass (Norlea, Manhatten) Bird's-foot Trefoil (Empire, Viking) with inoculant[1]	5[1] 5[1] 5 5 Total: 20[2]	.10 .10 .10 .10 Total: .40[2]

Figure 3 (cont'd). Seed Mixtures for Permanent Seeding

No.	Seed Mixture (variety)	Lbs/Acre	Lbs/1000 sq. ft.
16 [2]	Yarrow Oxeye Daisy Lance-leaved Coreopsis Black-eyed Susan Hard Fescue 20 lbs per acre	.8 1.75 4.7 .8 Total: 8	.03 - .05 .05 - .10 .14 - .3 .03 - .05 Total: .25 to .50
17 [11]	Smooth Bromegrass (Saratoga, Lincoln) Perennial Ryegrass (Norlea, Manhatten) Bird's-foot Trefoil (Empire, Viking) with inoculant [1]	15 5 10 Total: 30	.35 .10 .25 Total: .70
18 [11]	Deer Tongue (Tioga) with inoculant [1] Crown Vetch (Chemung, Penngift) with inoculant [1] Perennial Ryegrass (Norlea, Manhatten	10 [1] 15 3 Total: 28	.25 .35 .07 Total: .67
19 [3]	Annual Ryegrass Perennial Ryegrass	30 45 Total: 75	.80 1.2 Total: 2.0
20 [6.10]	Chewing Fescue Kentucky Blugrass Perennial Ryegrass (Norlea, Manhatten)	45 45 60 Total: 150	1 1 1.5 Total: 3.5
21 [10]	Creeping Red Fescue (Pennlawn, Wintergreen)	Total: 60	Total: 1.35
22 [10]	Creeping Red Fescue (Pennlawn, Wintergreen) Tall Fescue (Kentucky 31)	40 20 Total: 60	.90 .45 Total: 1.35
23 [10]	Creeping Red Fescue (Pennlawn, Wintergreen) Flatpea (Lathco) with inoculant [1]	15 30 Total: 45	.35 .75 Total: 1.10
24 [10.13]	Tall Fescue (KY-31, Cochise, Mustang, Silverado, Rembrandt)	Total: 150	Total: 3.60
25 [10.12]	American Beachgrass (Cape)	58,500 culms/acre	1,345 culms/100 sq. ft.

Figure 3 (cont'd). Seed Mixtures for Permanent Seeding

No.	Seed Mixture (variety) [9]	Lbs/Acre	Lbs/1000 sq. ft.
26 [11]	Switchgrass (Blackwell, Shelter, Cave-in-rock) Big Bluestem (Niagra, Kaw) Little Bluestem (Blaze, Aldous, Camper) Sand Lovegrass (NE-27, Bend) Bird's-foot Trefoil (Empire Viking)	4.0 4.0 2.0 1.5 2.0 Total: 13.5 [2]	.10 .10 .05 .03 .05 Total: .33 [2]
27 [10]	Flatpea (Lathco) Perennial Pea (Lancer) Crown Vetch (Chemung, Penngift) Tall Fescue (Kentucky 31)	10 2 10 2 Total: 24	.20 .05 .20 .20 Total: .33
28 [10]	Orchardgrass (Pennlate, Kay, Potomac) Tall Fescue (Kentucky 31) Redtop (Streeker, Common) Bird's-foot Trefoil (Empire, Viking)	5 10 2 5 Total: 22	.10 .20 .05 .10 Total: .45
29	Turf Type Tall Fescue (bonanza, Mustang, Rebel II, Spartan, Jaguar) or Perennial Rye ("Future 2000" mix; Fiestall, and Desherll)	175 to 250	6 to 8

Figure 3 (cont'd). Footnotes

1) Use proper inoculants for legume seeds, use four times recommended rate when hydroseeding.

2) Use Pure Live Seed (PLS) = $\frac{\%\text{Germination X }\%\text{Purity}}{100}$

Example: Common Bermuda seed with 70% germination and 80% purity=

$\frac{70 \times 80}{100}$ **or** $\frac{56}{100}$ **or 56%**

$\frac{10\text{lbs PLS/acre}}{56\%}$ **= 17.9 bulk lbs/acre of bagged seed**

3) RIDOT Temporary Seed Mix

4) RIDOT Park Mix

5) RIDOT Slope Mix

6) RIDOT Residential Seed Mix

7) RIDOT Native Seed Mix

8) RIDOT Wildflower Seed Mix

9) Wildflower mix containing New England Aster , Baby's Breath, Black eye Susan, Catchfly, Dwar Columbine, Purple Coneflower, Lance-leaved Coreopsis, Cornflower, Ox-eye Daisy, Scarlet Flax, Foxglove, Gayfeather, Rocky Larkspur, Spanish Larkspur, Corn Poppy, Spurred Snapdragon, Wallflower and/or Yarrow may be added to any seed mix given. Most seed suppliers carry a wildflower misture that is suitable for the Northeast and contains a variety of both annual and perennial flowers. Seeding rates for the specific mixtures should be followed.

10) Considered to be cool season mix

11) Considered to be a warm season mix

12) Wetland seed mix composition and application should be developed per site conditions and in coordination with a wetland scientist

13) Suitable around airfields

Source: USDA-NRCS and CT Guidelines for Soil Erosion and Sediment Control

(Credit: *2002 Connecticut Guidelines for Soil Erosion and Sediment Control*)

Sodding

(Photo Credit: MACC ESC Guide)

Definition

- Stabilizing fine-graded disturbed areas with the use of cut pieces of turf. Sod consists of stoloniferous or rhizomatous grasses that form a dense mat of plants, being cut at a uniform soil thickness of 0.75 inch +/-0.25 inch) at the time of cutting, excluding the shoot growth and thatch.

Purpose

- To establish a grass cover, free from weeds, when seeding would not be recommended due to climatic or site conditions;
- To immediately reduce erosion and the production of dust. (Sodding provides an initial higher level of erosion control than direct seeding and mulching.);
- To permanently stabilize the soil;
- To filter stormwater runoff and reduce pollution.

Applicability

- On slopes 2:1 or flatter, except on very short slopes where the slope length is no longer than the width of the cut sod
- In areas of heavier rainfalls and stormwater velocities or where concentrated surface runoff would prevent the establishment of protective vegetation by normal seeding procedure
- In channels where the design velocity does not exceed 5 feet per second (fps) with a duration of 1 hour or less when the velocity is at or near 5 fps. For design velocities that exceed 5 fps, refer to **Appendix L, Riprap** and **Appendix K, Turf Reinforcement Mats**.
- On sediment producing areas such as drainageways carrying intermittent flows, around drop inlets, in grassed drainageways, cut and fill slopes and other areas where conventional methods of turf establishment may be difficult or risky
- In watersheds where maintenance of high water quality is particularly important such as sites in public water supply watersheds or near watercourses or fisheries

- Where establishing turf grass and lawn is needed in the shortest time possible
- Following requirements in **Soil Preparation and Topsoiling**

Note: Sod is limited in its ability to withstand high velocity and/or long duration flows. The application of sod within a drainageway should be based on a determination that vegetation will satisfactorily resist channel velocities.
Note: Sod has higher initial maintenance requirements (i.e., watering) than seed.

Planning and Design Requirements

Materials

Sod comes in standard size sections of sod strong enough to support their own weight and retain their size and shape when suspended from a firm grasp on one end of the section. In New England most sod is cut in either 9 sq ft (1.5 ft wide by 6 ft long) pieces or 10 sq ft (2 ft wide by 5 ft long) pieces, with the 10 sq ft being the most common. Sod may also be available in “big rolls” which are 4 ft wide by 50 to 62.5 feet long. These “big rolls” can be cut with 1 seam down the middle, where there will be two 2-ft sections on each 4 ft wide roll, or they can be cut without a seam. Mechanical equipment is required for installation as each roll will weigh approximately 1,000 lbs. About 80% of all rhizomes are in the top 1 inch of soil. The thinner the sod is cut the more quickly it will knit to the soil. However, the thinner the sod, the greater the need for irrigation as the thin sod will be more susceptible to drying out.

Select sod grown from seed best suited for the sites to be stabilized and grown under measures conducive to quality sod that will be free of any thatch, weed, insect, disease, and other pest problems.

Select sod that is mature enough to be handled easily as described below, but do not use sod older than three years. Cultivated turf grass is usually considered ready for harvest when a cut portion of sod 3 feet long by 1 to 1.5 feet wide will support its own weight when suspended vertically from the upper 10% of the section.

Timing Limitations

Sod may be placed anytime during the year for slope stabilization but shall not be installed on frozen ground or for waterway applications during the months of December, January or February.

Sod shall be delivered, and installed typically within 36 hours of harvest. Plan site preparation (see below) and delivery of sod accordingly. Have sod delivered to the site as soon as practical after harvesting. During hot weather, sod installation should be completed within 20 hours of harvest. Sod installed during hot weather will require frequent irrigation, meaning at least once daily for the first week to 10 days. During cool seasons, installation time can be extended to within 48 hours of harvest.

Channel velocities

Channel velocities for the design storm should not exceed 5 fps with a duration of less than 1 hour at or near 5 fps. For sodded waterways, the sod type shall consist of plant materials able to withstand the design velocity (see **Vegetated Waterways** measure).

Installation Requirements

Site Preparation

- Prior to soil preparation, bring to grade areas to be sodded in accordance with the approved plan.
- Install and/or repair other sediment control measures needed to control water movement into the area to be sodded.
- Clean soil surface of trash, debris, large roots, branches, stones and clods in excess of 1 inch in length or diameter. Do not apply sod to gravel or non-soil surfaces.
- Place topsoil as needed, meeting the requirements of **Soil Preparation and Topsoiling.** As with any other seeding or planting of vegetation, a decision on soil quality and depth must be made. Generally speaking, the poorer the site's natural fertility and soil texture, and/or the greater the need for high quality vegetative covers for erosion control or aesthetics, the greater the need for topsoil.
- Perform soil tests to determine the exact requirements for lime and fertilizer. The agronomy laboratory at the University of Massachusetts or Connecticut Soil Testing Laboratories or a reputable commercial laboratory may conduct the soil tests. Information on soil tests and procedures are available from the Rhode Island Cooperative Extension, commercial nurserymen, lawn care professionals or other reliable source.
- When required, spread soil amendments evenly over the area to be sodded, and incorporate into the top 3 to 6 inches of the soil (if possible) by discing, harrowing or other acceptable means.
- Fill or level any irregularities in the soil surface resulting from topsoiling or other operations in order to prevent the formation of depressions or water pockets.

Note: If the soil is hot or dry, lightly irrigate the soil immediately prior to laying the sod to cool the soil and reduce root burning and die back.

Sod Installation

- Install the first row of sod in a straight line with subsequent rows placed parallel to and butting tightly against each other. Stagger lateral joints to promote more uniform growth and strength **(Figure 1. "Uninterrupted Sod Pattern")**. Take care to ensure that sod is not stretched or overlapped and that all joints are butted tightly in order to prevent voids that would cause drying of the roots.
- When sodding around objects, or conforming to odd shapes or curves it is best to continue to lay sod straight and square, then cut and trim the sod to fit the shape. (**Figure 1. "Sodding Around Objects")**

Figure 1. Sodding Patterns

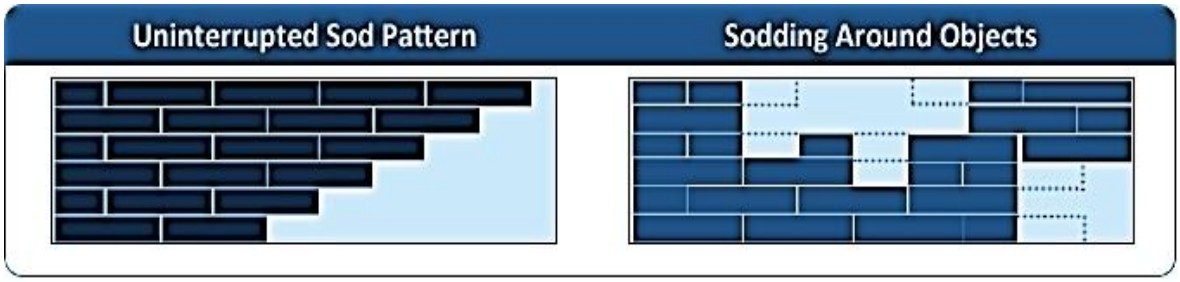

(Credit: *2002 Connecticut Guidelines for Soil Erosion and Sediment Control*)

- On slopes 3:1 or steeper or wherever erosion may be a problem, lay sod with staggered joints perpendicular to the direction of flow (i.e. on the contour) and secure by pegging or other approved methods. If the site of sodding is to be mowed, the use of wood pegs or biodegradable staples is recommend over metal staples for anchoring to reduce problems caused by mowing equipment hitting metal staples should they get lifted over time from the sod surface. Also, for these areas, sod cut into long strips and rolled for transport is desired because it minimizes the number of sections.
- As sodding is completed, roll and tamp the sod to ensure contact with the soil.
- After rolling, irrigate the sod to a depth sufficient to thoroughly wet the underside of the sod pad and the 4 inches of soil below the sod.

Sodded Waterway Installations

- Use a sod capable of withstanding the design velocity.
- Follow site preparation requirements listed above.
- Lay sod strips perpendicular to the direction of channel flow, taking care to butt the ends of strips tightly.
- As sodding of clearly defined areas is completed; roll or tamp the sod to ensure contact with the soil.
- Peg or staple to resist washout during the establishment period. Fasten every 3 inches on the leading edge and 1 to 2 ft. laterally. If the site of sodding is to be mowed, the use of wood pegs or biodegradable staples is recommended over metal staples for anchoring to reduce problems caused by mowing equipment hitting metal staples should they get lifted over time.
- After rolling, sod shall be irrigated to a depth sufficient to thoroughly wet the underside of the sod pad and the 4 inches below the sod.

Inspection, Maintenance, and Removal Requirements

- During the first week, inspect daily and if rainfall is inadequate, then water the sod as often as necessary to maintain moist soil to a depth of at least 4 inches below the sod. Subsequent waterings may be necessary to ensure establishment and maintain adequate growth.
- After the first week, inspect sodded area at least once a week and within 24 hours of the end of a storm with a rainfall amount of 0.25 inch or greater during the first growing season.
- Where sod has died or has been moved or where soil erosion has occurred, determine if the failure was caused by inadequate irrigation, poorly prepared surface, improper anchoring, excessive sedimentation or excessive flows.
- If the failure was caused by concentrated flow, check water velocities and duration to ensure it does not exceed 5 feet per second (fps) or duration greater than 1 hour at or near 5 fps. Install additional measures to control water and sediment, repair erosion damage, and reinstall sodding with anchoring.
- Be prepared to mow sod within 1 week of installation. In order to prevent “scalping” do not remove more than 1/3 of the grass leaf at any one cutting.
- Long-term maintenance of the sod should be commensurate with the planned use of the area.
- For liming and fertilization, follow soil test recommendations when possible.

Landscape Planting

(Photo Credit: US EPA)

Definition

- Planting trees, shrubs, or groundcovers for permanent stabilization of disturbed areas that have been properly prepared and topsoiled.

Purpose

- To aid in protecting and stabilizing soil;
- To intercept precipitation, retard runoff, and facilitate soil conservation;
- To provide site aesthetics, windbreaks, riparian buffers, plant diversity, and/or wildlife habitat;
- To provide a low-maintenance landscape with minimal fertilizer, pesticide and irrigation needs over the long term.

Applicability

- On any slope where permanent vegetation may persist;
- On steep or irregular terrain or in shady areas, where mowing to maintain an herbaceous plant cover is not feasible.

  Note: For slopes steeper than 2:1, see the slope stabilization measures

- In areas where turf establishment and maintenance is difficult, including narrow landscape strips.

  Note: Areas less than 6 feet in width shall not be planted as these narrow strips are difficult to keep healthy (and lead to watering adjacent pavement)

- Where ornamentals are desirable for landscaping purposes.
- Where woody plants are desirable for soil conservation, riparian buffers, or to establish wildlife habitat.
- Where wind breaks or visual screening is needed.
- Following requirements in **Soil Preparation and Topsoiling.**
- Not for bedrock cuts or faces.

Note: Appropriate coastal species must be used in coastal settings

Planning and Design Requirements

Preliminary Actions

Grass vs. Woody Vegetation

Consideration must be given to when to use grass and/or other herbaceous vegetation, or whether woody landscape plantings should be utilized.

- Grass: Advantages
  - Provides quick cover
  - Requires periodic mowing to prevent the area from being occupied with shrubs and tree seedlings through the process of natural succession
- Grass: Disadvantages
  - May allow for more pedestrian or vehicular travel and so allow for soil compaction, plant death, and increasing erosion potential
  - Provides limited wildlife value and may provide an attractive feeding habitat for nuisance species such as Canada Geese
- Woody Vegetation: Advantages
  - Provides maximum interception and uptake of rainfall
  - Improves air quality
  - Modifies air circulation patterns
  - Reduces heating and cooling costs
  - Provides shade and natural cooling of air and water
  - Screens undesirable views and noises
  - Calms and controls traffic
  - Provides wildlife food and shelter
  - Restores natural conditions to a disturbed site

Landscape planting plan

If landscape plantings are intended, then a landscape planting plan should be developed. The landscape planting plan should identify the species, location, number of each plant to be planted, the type of planting stock (i.e. bare-root, balled and burlapped, etc.), and the timing for planting.

The following characteristics should be taken into account when developing a landscape planting plan and selecting plant material and are discussed in great detail below.

- Adaptability to and functional contribution to site conditions
- Hardiness zones
- Mature height and spread
- Growth and establishment rate
- Timing of transplanting
- Landscape plant sources
- Invasive species

Adaptability to and Functional Contribution to Site Conditions

Proper selection of landscape plants requires a careful study of the characteristics of the site (soil type, surface and subsurface drainage, and light availability, in addition to exposure to salt at shoreline or roadsides, high winds, polluted air, or heat from reflected sun), a thorough knowledge

of the species available and hardy to the area, and a thorough knowledge of potential insect, disease, and cultural problems which may weigh against the plant selected for the required function.

Functional characteristics of specific plants should be considered carefully so that the plant chosen will fulfill its intended role. For instance, to control soil erosion, plants with rapidly growing aggressive root systems may be selected. To absorb sound or screen views in winter conditions, deep, dense planting of evergreens may be selected. To filter dust from summer winds, a deciduous tree with coarse, hairy leaves could be chosen for its enhanced ability to trap airborne dust. Plants that provide a variety of nuts and berries as sources of food for wildlife may contribute significantly to the habitat value of a particular location.

Undesirable attributes of plants must also be considered. Aggressive root systems beneficial in one application may create problems in other applications where the roots enter and obstruct underground pipelines, create internal pathways for water in earthen dams and dikes, or damage sidewalks or underground utility installations. Potential clogging of drainage systems with debris from trees must be considered in selecting street trees.

Hardiness Zones

- Woody landscape plants must be hardy to the area in which they are planted in order to survive. Hardiness zones are geographical areas mapped according to the approximate range of average annual minimum temperatures. Plants adaptable to conditions in specific zones are said to be hardy in those zones.
- Plant selection should be reflective of the milder conditions along the shoreline, and cooler weather in the northern and western areas of the state.
- The plant selection process in Rhode Island should begin with consultation of one of the several references below depending upon the site use and characteristics. Available on-line resources include:
  - **Urban Environmental Design Manual (RI DEM)**
    www.dem.ri.gov/programs/bpoladm/suswshed/pdfs/urbman.pdf
  - **Urban Coastal Greenway Design Manual (RI Sea Grant)**
    seagrant.gso.uri.edu/z_downloads/coast_ucg_designmanual.pdf
  - **Coastal Plant List (URI)**
    www.uri.edu/cels/ceoc/coastalPlants/CoastalPlantGuide.htm
  - **Sustainable Trees and Shrubs (URI**)
    http://www.uri.edu/ce/factsheets/sheets/sustman.pdf
  - **Rain Garden Plant Guide (URI)**
    http://www.uri.edu/ce/healthylandscapes/raingarden.htm#plants
  - **Native Plants**
    http://www.plantnative.org/rpl-nen.htm#gr

Mature Height and Spread

To minimize future maintenance and replacement costs and to enhance long-term plant health, select and place plants to provide adequate space for plant growth to its natural mature size. Consideration must be given to the height and location of overhead utilities, the location and depth of underground facilities, lines of sight around intersections of roadways, road and sidewalk clearance needed for snow removal operations, clearance from buildings, and all other potential situations where the maturing plant will become an obstruction, nuisance, or hazard.

If the space allotted to the plant selected is inadequate, suitable periodic maintenance pruning must be planned in accordance with the needs of the species, limitations of the site, or the intended effect. Normally, plants installed for erosion control purposes are not intended to be pruned, and should be selected and placed with knowledge and consideration of mature sizes.

Growth and Establishment Rate

Some trees and shrubs attain their mature sizes very rapidly, whereas others are slow to grow to mature size. Knowing how fast a tree, shrub, or vine will become established and how quickly it will grow to mature size is important in order to select the right plant, and the number of plants (spacing) for the particular situation.

Timing of Transplanting

- Landscape plants may be bought as balled in burlap or similar material, containerized, or as bare rooted stock. All plants shall comply with the American Standard for Nursery Stock (ANSI Z60.1), produced by the American Association of Nurserymen, which provides a comprehensive and consistent set of measurement and specification standards for all types of plant material.
- When plants may be transplanted depends on how they are grown and supplied.
- Because plants may lose 90% or more of their root system from the digging operation, deciduous trees are normally dug and balled for transplanting in the early spring, before flowers or leaves develop. Most species transplant best in either the spring or fall. Summer digging or transplanting of deciduous trees may be done, but requires special preparation and after care to minimize potentially fatal stresses on the plant. Evergreens may also be dug and balled in burlap in the early spring, but are also successfully dug and transplanted in summer after new growth has hardened off.
- Trees and shrubs to be planted as bare-root plants should be handled only when dormant in spring, or after leaf fall in autumn.

Landscape Plant Sources

- The plants in URI's "Sustainable Trees and Shrubs" (above) are usually available at commercial nurseries balled in burlap, or in containers.
- Information on additional appropriate plants may be obtained from Rhode Island licensed Arborists, a landscape architect registered in the State of Rhode Island (RLA).

Invasive Species

Certain introduced shrubs, like Autumn Olive (Elaegnus umbellata), Honeysuckles (Lonicera spp.), Multiflora Rose (Rosa multiflora), Winged Euonymus (Euonymus alatus), and Asiatic Bittersweet (Celastrus orbiculatus) have been identified as undesirable because they are not native, and are invasive into otherwise naturally vegetated areas.

The Rhode Island Natural History Survey maintains a listing of invasive plant species at its Invasive Species Portal. This site should be consulted to avoid selecting undesirable, non-native invasive plants: http://rinhs.org/category/invasives/invasive-species-portal

Trees

Selecting the Right Trees

Selection of trees depends on the desired function of the tree, whether it be shade, privacy screening, noise screening, appearance, enhancement of wildlife habitat or a combination of these. The following characteristic of the tree should be considered when making choices.

- Mature height and spread: The eventual height of a tree must be considered in relation to planting location to avoid future problems with power lines and buildings.
- Growth rate: Some trees attain mature height at an early age, others take many years. If "instant shade" is desired, rapid growth is needed. Slow-growing trees are usually less

brittle and live longer.

- Root system: Some trees obstruct underground drainage systems and septic systems with fibrous roots. Consult your local nursery for the appropriate separation distances for different tree species.
- Cleanliness: Maintenance problems can be avoided by not selecting trees that drop seedpods, flowers or twigs in large amounts.
- Moisture and fertility requirements: If good soil and drainage are not available, trees tolerant of poor growing conditions must be planted.
- Ornamental effects: Some trees may be selected for their aesthetic qualities; timing and color of blooms, leaf color and shape and bark may be considerations.
- Evergreen vs. deciduous: Evergreens retain their leaves throughout the year and so are useful for privacy screens and noise screens. Deciduous trees drop their leaves in fall. They are preferable for shade trees.
- Wildlife food source Many trees and shrubs produce beneficial fruits and nuts for wildlife.
- Invasiveness: Tree species which are non-native and are invasive should not be planted. Invasive species often out-compete native species which results in a reduction of biodiversity and may result in monoculture vegetative communities, both of which are disadvantageous to the natural environment.
- Stock Availability: Trees are usually available at commercial nurseries as container-grown trees or as balled-and-burlapped trees.

Site Evaluation

Site evaluation should be done concurrently with the tree selection process. Consider the prior use of the land; adverse soil conditions, such as poor drainage or acidity; exposure to wind; temperature extremes; location of utilities, paved areas and security lighting; and traffic patterns.

Shrubs

A shrub is typically an upright woody plant less than 20 feet tall, usually with several stems rising from a common base. Some have the appearance of small trees, and some lie close to the ground.

There are so many ornamental shrubs available that advising on the choice of any specific species or group is difficult, but try to choose ones that enrich or hold the soil or encourage development of wildlife habitat. Information on shrubs is available from nurseries, landscape architects, the Natural Resources Conservation Service and the Rhode Island Cooperative Extension.

Vines and Ground Covers

Low-growing plants that sprawl, trail, spread or send out runners come in many leaf types, colors and growth habits. Some are suitable only as part of a maintained landscape and some can stabilize large areas with little care. In addition to stabilizing disturbed soil, vines and ground covers can perform the following functions:

- Maintain cover in heavily shaded areas where turf will not thrive
- Provide attractive cover that does not need mowing
- Help to define traffic areas and control pedestrian movement. People are more likely to walk on the grass than to walk on a thick bed of ivy or a prickly planting of juniper.

Information on vines and groundcovers is available from nurseries, landscape architects, the Soil Conservation Service, and the Rhode Island Cooperative Extension.

Installation Requirements

Tree Preparation

Proper digging of a tree includes the conservation of as much of the root system as possible, particularly the fine roots. Soil adhering to the roots should be damp when the tree is dug and kept moist until planting. The tree should be carefully excavated and the soil ball wrapped in natural burlap and tied with rope. Use of a mechanical tree spade is also acceptable. Evergreens, or any trees which are to be transplanted for a distance, should have the branches bound in with soft rope to prevent damage. A rule of thumb for the width of the root ball is a minimum of 10 inches in diameter per inch of trunk diameter. Thus a 3-inch tree should have a root ball at least 30 inches in diameter.

Timing

- Generally, deciduous trees and shrubs can be planted in early spring or late fall; however, some exceptions occur, consult with your local nursery. Evergreens can be planted in early spring (optimally April 1 to May 30) and early Fall (optimally September 1-30).
- Container-grown trees can be planted at any time of year that the ground is not frozen if sufficient water is provided. They should be purchased and planted when quite young (less than 2" diameter trunk) to avoid dealing with root-bound plants. However, ideal planting conditions exist from approximately March 31 to June 1 and from August 31 to October 31.
- Trees to be planted as bare-rooted seedlings should be handled only while dormant in spring, or after leaf fall in autumn.
- Generally, ground covers can be planted in spring and fall; however, some exceptions occur, consult your local nursery. Container grown plants can be planted throughout the growing season if adequate water is provided.
- Insofar as practical, all plant material should be planted on the day of delivery.

Delivery

Upon receipt of plant stock, check to see that adequate protection during transit has been provided. If shipped by open truck, the plants should have been covered with a tarpaulin or canvas to minimize desiccation from exposure to the sun and wind. When delivery is made by an enclosed vehicle, the plants should have been carefully packed and adequately ventilated to prevent “sweating” of the plants. Physical injuries should have been prevented by careful packing. In all cases, plants must be kept cool and moist until planting.

Storage

Plants which must be temporarily stored on site should be kept in the shade and protected from drying. Root balls must be protected by covering the root ball with soil or other acceptable material and must be kept moist. Container stock held on site may require watering if planting is delayed. Bare root plant may be stored in a cool, shaded area for as long as 10 days. If bare root plants must be kept for longer than 10 days, they should be “heeled in” (temporarily planted in a trench) until they can be permanently planted. All stock should be handled carefully and as few times as possible. The soil should be kept moist.

Planting Burlap Balled Plant Material

- Stock Examination: Ball sizes should be of a diameter and depth to encompass enough of the fibrous and feeding root system as necessary for the full recovery of the plant. Recommended ball depth to diameter ratios are shown in **Figure 1.** Compare the ball

size in relation to the size of the plant, using the current American Standard for Nursery Stock (ANSI Z60.1) and note the size of the roots cut when dug to be balled in burlap. Undersize root balls or large cut roots are a clue that digging may have been improper, and that actual root mass may be inadequate to support the plant during its establishment period. Balled and burlapped trees are usually larger; check to be sure that soil around roots was dug with the tree and not just packed around bare roots.

- Proper Planting Depth: Proper planting depth of a plant balled in burlap may vary depending upon how the plant was dug and balled. To find the proper planting depth, locate the crown of the plant, the point where the root mass or first major root originates from the stem. This point should be at or slightly below the top of the soil (i.e., do not bury crown). **Figure 2** shows the proper planting of balled and burlapped plant material, using a deciduous tree as an illustration.

Figure 1. Ball diameter to required hole depth

If the root ball is:	The hole depth must be:
<20" ball diameter	3/4 of ball diameter
20-30" ball diameter	2/3 of ball diameter
31"-48" ball diameter	3/5 of ball diameter

(Credit: *2002 Connecticut Guidelines for Soil Erosion and Sediment Control*)

- Proper Planting Circumference: Proper planting depth of a plant balled in burlap may vary depending upon how the plant was dug and balled. To find the proper planting depth, locate the crown of the plant, the point where the root mass or first major root originates from the stem. This point should be at or slightly below the top of the soil.
- Site Preparation: The planting hole should be dug deeply and widely enough to allow proper placement of the root ball. The final level of the root ball's top should be level with the ground surface. As the hole is dug, topsoil should be kept separate from subsoil. If possible, discard subsoil and replace with good topsoil. If topsoil is unavailable, improve subsoil by mixing in $^{1}/_{3}$ by volume of peat moss or well-rotted manure. Heavy or poorly drained soils are not good growth media for trees. When it is necessary to transplant trees into such soils, extra care should be taken. Properly installed drain tile will improve drainage.
- Handling and Setting the Plant: Set the plant in the planting site so that it is plumb, level, and centered. Do not use the trunks of trees as levers to adjust the position of the root ball, as this may fracture the root ball and damage roots. Instead, move the root ball itself, being careful not to pull on ropes which may lay against bark (especially in spring, when bark slips easily).
- Depth of planting must be close to the original depth. The tree may be set just a few inches higher than in its former depth, especially if soil is poorly drained. Do not set the tree lower than before. Soil to be placed around the root ball should be moist but not wet.
- Set the tree in the hole and cut the rope which holds the burlap. Loosen the burlap; remove top one-third and fold the remaining burlap underneath. (If plastic burlap or

netting is used, remove completely.) Do not break the soil of the root ball. Fill the hole with soil half-way and tamp firmly around the root ball. Add water to settle the soil and eliminate air pockets. When the water has drained off, fill the hole the remainder of the way and tamp as before.

- Creating a Basin: Use extra soil to form a shallow basin around the tree, somewhat smaller than the diameter of the root ball. This basin will hold water when the tree is irrigated. Level the ground and eliminate these basins when winter sets in, as ice forming in the basin might injure the trunk.
- Backfilling: After all tying materials and wire baskets are removed as appropriate, backfill the site to original grade with original soil.
- Watering: Soil around the tree should be thoroughly watered after the tree is set in place and when the soil becomes dry. Water the backfill soil thoroughly, allowing the water to settle the soil, removing air pockets. Do not pack with feet or tools. Use enough water to ensure thorough saturation of the soil. Add soil to bring the soil level back up to grade when the water has infiltrated. As a temporary measure to aid in establishment, a low (3" to 6") rim of tamped soil can be built to help hold water for subsequent watering. Locate the inside edge of the rim at or outside the edge of the root ball.
- Mulching: around the base of the tree is helpful in preventing roots from drying out. The soil between planted trees must be stabilized by mulching or planting cover vegetation.
- Supporting the Tree: Newly planted trees need artificial support to prevent excessive swaying. Stakes and/or guy wires may be used (staking trees or using guying wire covered with rubber hose sections is not recommended in most circumstances). Failure to remove stakes and wires has caused severe damage to trees by girdling the trees at the point of wire attachment. By allowing the tree to flex ‘somewhat’ in the wind, the tree will be able to develop a proper taper and anchoring roots to naturally resist movement in the wind. Staking and guying may become necessary due to loose root balls, unusually high or persistent prevailing winds, or other specific conditions. In these cases, use of a flexible and biodegradable type of tree tying material is preferred.
- Fertilization: Under normal circumstances, it is not recommended to fertilize woody plants upon initial planting. Fertilizer must not come in direct contact with the roots. A simple way to ensure this is to make holes in the tree's root area with a punch bar, crowbar or auger. Holes should be 18 inches deep, spaced about 2 feet apart, and located around the drip line of the tree. Distribute the recommended fertilizer evenly into these holes, and close the holes with the heel of the shoe or by filling with topsoil or peat moss. Fertilize trees in late fall or in early spring (before leaves emerge).

Figure 2. Transplanting Balled and Burlapped Plants

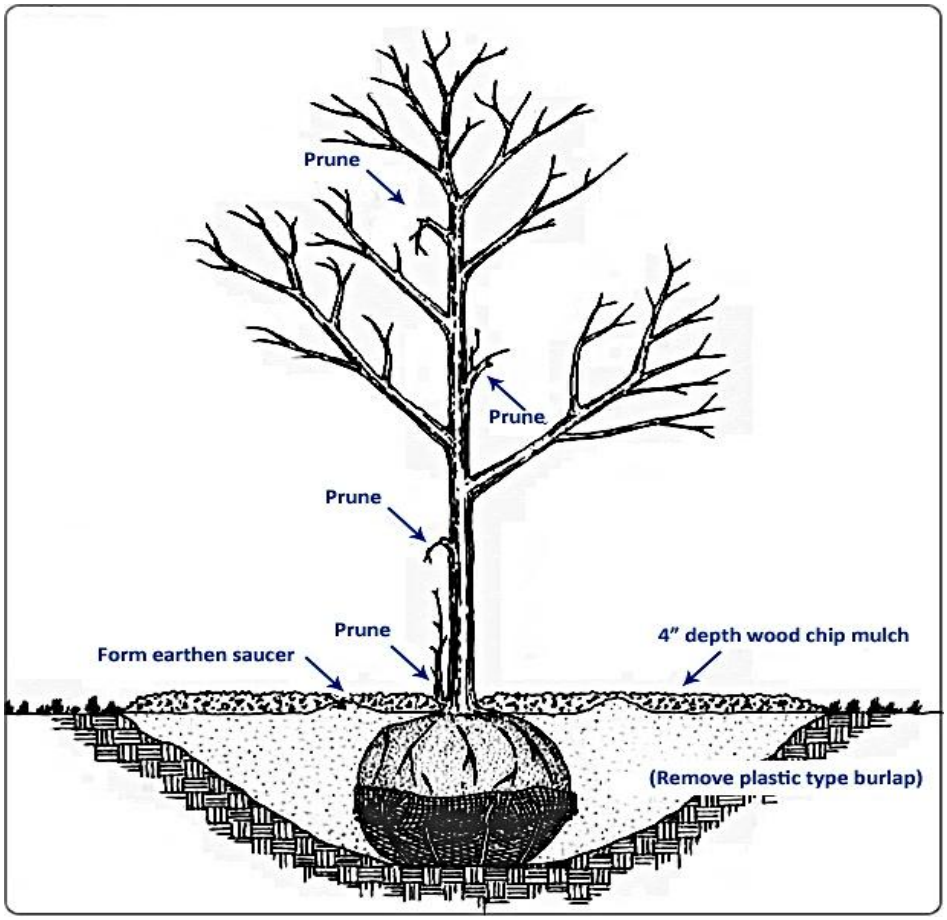

(Credit: *2002 Connecticut Guidelines for Soil Erosion and Sediment Control*)

Transplanting Bare Root Plant Material

- Dig the hole deep and wide enough to accommodate all the roots, and allow them to spread out without bunching or curling. (No "J"- shaped roots.)
- If the roots are excessively long, they may be pruned back to a length of 10 to 12 inches.
- Place the plant at the same depth in the soil at which it was planted when rooted in the nursery.
- Add soil as necessary to fill planting hole to existing grade.
- Water thoroughly after planting and make sure that there are no turned up roots or air pockets in the soil.
- Either use landscape mulch or prepare the site by very low cutting of grass and weeds to reduce initial competition. It is very important to prevent grasses, vines, and other vegetation from competing with the newly transplanted plants for sunlight, water, and soil nutrients.
- When larger shrubs or trees are planted bare root, staking and guying will likely be necessary. As mentioned above, use of a flexible and biodegradable type of tree tying material is preferred to the traditional hose and wire system.

Transplanting Container Grown Plants

- Stock Examination: For plants grown in containers, carefully remove the plant from the container, and inspect the root mass to determine if the plant has well developed roots, and to be sure it has not been recently repotted to a larger pot size. Containerized stock should have well developed roots, but should not be pot bound, which causes roots to encircle the container, resulting in difficulties in establishment.
- Site Preparation: Site preparation for container grown plants is the same as for balled and burlapped plants.
- Soil amendments: Under normal circumstances, it is not recommended to fertilize woody plants upon initial planting. However, those plant materials, such as groundcovers, that naturally grow very close together cause severe competition for space, nutrients and water. Soil for ground covers should be well prepared. A well-drained soil high in organic matter is best. If the area to be planted is so large that adding amendments to the soil as a whole would be impractical, organic matter may be added only to each planting hole. Apply lime and fertilizer according to soil test results, or add 5 pounds of 10-10-10 and 10 pounds of ground agricultural limestone to every 100 square feet. Incorporate these soil amendments into the top 4 to 6 inches of the soil. Add organic matter up to 1/3 the total soil volume, either over the whole area (a layer 2 inches deep mixed into the top 6 inches) or in each planting hole, if the area is large.
- Handling and Setting the Plant: When container grown plants have well developed root systems that encircle the pot, either loosen the roots or slice the root ball with a sharp knife vertically three or four times, cutting about an inch deep. This will promote new roots to develop and spread out, rather than continuing to follow the circular rooting pattern. If excess soil in the pot had buried the original soil level just above the crown of the plant, be sure to adjust the planting depth to place the plant back at or slightly above the original soil level. Plants such as ivy, pachysandra, and periwinkle should be planted on one-foot centers; large plants such as juniper can be spaced on 3-foot centers. Native ground covers can be found at http://www.plantnative.org/rpl-nen.htm#gr
- Backfilling, Watering and Mulching: Backfill the site to original grade with original soil. Water the backfill soil thoroughly, allowing the water to settle the soil, removing air pockets. Do not pack the soil tightly with feet or tools. Use enough water to ensure thorough saturation of the soil. Add soil to bring the soil level back up to grade when the water has infiltrated. Mulch the disturbed area with landscape mulch.
- Mulching for Groundcovers: When establishing ground covers, it is not desirable to plant species that will compete strongly with the ground cover or will make maintenance difficult. Thick, durable mulch such as shredded bark or wood chips is recommended to prevent erosion and reduce weed problems. On slopes where erosion may be a problem, jute netting or excelsior blankets may be installed prior to planting and plants tucked into the soil through slits in the netting. Refer to **Mulching** for further details. Such plants should be put in a staggered pattern to minimize erosion.
- Fertilization: Under normal circumstances, it is not recommended to fertilize woody plants upon initial planting.

Site Stabilization

When stabilizing the disturbed area between the tree plantings, do not use grasses or legumes which will over-shade the new seedlings. Where possible, a circle of mulch around seedlings will help them to compete successfully with herbaceous plants.

Inspection, Maintenance, and Removal Requirements

Maintenance of trees, shrubs, and ground covers is an exhaustive topic, which is not addressed by these Guidelines. Instead, the most critical maintenance needs for the first year of a newly transplanted plant is described below.

Inspection

Inspect plants until they are established or at least monthly for 1 year following planting, and more frequently during hot dry periods for mulch adequacy, soil moisture and general plant condition. When a plant has regrown a sufficient root system such that it can withstand normal variations in climate and soil conditions, and has resumed normal growth, it is considered to be established. An established plant will exhibit normal growth patterns of bud break and leaf fall, and will have resumed a growth rate considered normal for the species.

Larger plants, especially burlap balled trees which have lost a significant amount of their root systems upon transplanting will need the most attention during the initial establishment period.

Mulch and Water – General Guidelines

Apply additional landscape mulch around landscape plants as needed to keep soil covered and to inhibit weed growth. Keeping all newly transplanted plants adequately mulched is important to moderate fluctuations in soil moisture and temperature. Trees that are mulched will recover from transplanting, become established, and resume normal growth more quickly than trees planted without the benefit of mulch.

Water plants during hot dry periods when soil around the plants begins to dry out. If leaves of recent landscape plantings are wilted, severe water deficiency is indicated, and permanent damage to the plantings may result if supplemental water is not provided promptly. For successful establishment of summer plantings, adequate watering during the balance of the summer and into the fall is especially important. A useful rule of thumb is that new plantings in Rhode Island should receive at least 1 inch of rain per week.

Insect and Disease Control – General Guidelines

All plants in the natural environment are host to a wide variety of insect and disease organisms. When insects or disease problems on a plant become threatening to the life or practical value of the plant, corrective or preventative actions may become necessary. When a problem occurs, positive identification of the host, and then of the insect or disease problem is vital to successfully resolving the problem. Plants should be selected to avoid common insect or disease problems by choosing those species resistant to common plant diseases, or unpalatable to common insect problems. The Rhode Island Cooperative Extension or a state licensed arborist can help identify insect and disease problems and suggest solutions.

Maintenance of Trees

Ideally, young trees should receive one inch of water each week for the first two years after planting. When rain does not supply this need, the tree should be watered deeply but not more often than once per week.

Transplanted trees should be re-fertilized annually until the tree is established. Some simple methods to supply fertilizer to trees are tree food spikes and holes bored around the tree drip line and filled with fertilizer. In mature trees, premature leaf fall and yellowed leaves may indicate the need for fertilization. Generally, the recommended fertilizer formula is 5-10-10; follow the manufacturer's recommendations for application rate.

Prune to remove only dead or damaged limbs on newly planted trees unless an arborist has recommended otherwise. Pruning the top of the tree will severely weaken the tree’s ability to grow

a healthy new root system in the new site. This is especially important for trees balled in burlap, which lose a large portion of their original root system when they are dug from the field. For new roots to form from plants grown in containers, top pruning should be delayed for at least a year. Ideally, newly planted trees should not be pruned until after their third year, and then only to remove dead and weak branches, and to train the tree's future growth by removing or pruning any wayward branches which will lead to future problems, or detract from the natural shape of the plant.

Maintenance of Shrubs

Shrubs should be properly pruned, given adequate water and fertilized annually until established. Simple methods of fertilization are recommended, as described above. Maintain the mulch cover or turf cover surrounding the shrubs. A heavy layer of mulch reduces weeds and retains moisture.

Maintenance of Ground Covers and Vines

Trim old growth as needed to improve the appearance of ground covers. Most covers need once-a-year trimming to promote growth. Maintain mulch cover with additions of mulch where needed: Fertilize annually as described above.

References

Suggested for end of Chapter additional resources- RI Plant Hardiness Zones
http://efotg.sc.egov.usda.gov/references/public/RI/RI_Plant_hardiness_Zones_map.pdf RI Plant

Hardiness Zones – ArcGIS map http://www.arcgis.com/home/webmap/viewer.html
http%3A%2F%2Fmaps.edc.uri.edu%2Farcgis%2Frest%2Fservices%2FNRCS%2FPlant_Hardiness_Zones_2012%2FMapServer&source=sd

Land Grading

(Photo Credit: US EPA)

Definition

- Reshaping of the ground surface by excavation or filling or both to create reverse slope benches, stair steps, and similar terraced landforms.

Purpose

- To control surface runoff and reduce erosion potential.
- To prepare for the establishment of a vegetative cover on those areas where the existing land surface is to be reshaped by grading.

Applicability

- Where grading to planned elevations is practical for the purposes set forth above.
- On slopes no steeper than 2:1. For slopes steeper than 2:1, see the slope stabilization measures: Measure 24 Retaining Walls, Measure 25, Slope Protection, and Bio-engineering Measures 27 thru 34.
- Does not apply to bedrock cuts or faces (except for ripable rock).

Planning and Design Requirements

Erosion potential during construction must be addressed. The two primary factors that determine the potential for excessive erosion on any site are slope (steepness) and length of slope. Slope is the relationship of horizontal distance to vertical distance and is referenced as either horizontal to vertical, a ratio of horizontal:vertical or a percentage of the vertical divided by the horizontal. **Figure 18-1** identifies the methods by which slope is determined. Long slopes without provisions for surface water diversions are much more susceptible to erosion than shorter slopes. As slopes become steeper, the potential for erosion also increases.

Figure 1. Determining Slopes

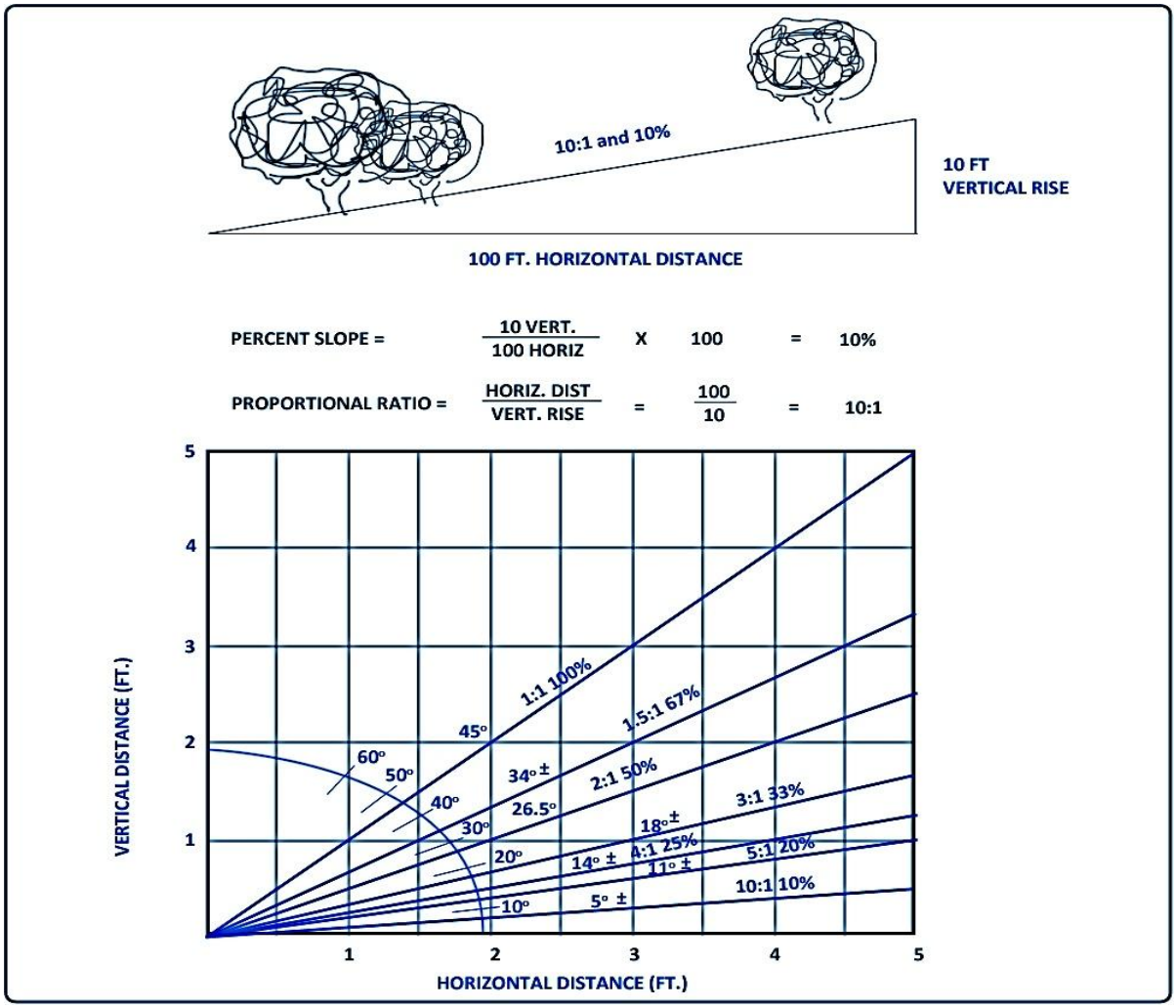

(Credit: *2002 Connecticut Guidelines for Soil Erosion and Sediment Control*)

Preliminary Planning Elements

- Obtain sufficient information on topography, soils, hydrology and geology to determine what issues, if any (such as bedrock, seepage, and steep slopes), are to be considered in a development plan and grading operation. Detailed soil mechanics analyses will determine an acceptable final slope.
- Utilize the existing topography and natural features as much as possible when developing a grading plan. This minimizes the degree of land disturbance and avoids extreme grade modifications within a site development.
- Stockpiles, borrow areas, and spoil should be shown on the plans and shall be subject to the provisions of **Stockpile and Staging Area Management.**
- Do not create slopes so close to property lines as to endanger adjoining properties without adequately protecting such properties against sedimentation, erosion, slippage, settlement, subsidence, or other related damages.
- Conduct surface runoff to storm drains, protected outlets, or to stable water courses to ensure that surface runoff will not damage slopes or other graded areas; see standards

and specifications in **Vegetate Waterways; Diversions; and Grade Stabilization Structures.**

- Fill material shall be free of brush, rubbish, rocks, logs, stumps, building debris, and other objectionable material. It should be free of stones over two (2) inches in diameter where compacted by hand or mechanical tampers or over eight (8) inches in diameter where compacted by rollers or other equipment. Frozen material shall not be placed in the fill nor shall the fill material be placed on a frozen foundation.
- Slopes steeper than 2:1 or steeper than 3:1 and higher than 15 feet require cross slope benches or other engineered structural design measures. See **Figure 2**.

Figure 2. Engineered Slope Design

Slope Height	Slope Steepness		
	Shallow (4:1)	Moderate (3:1)	Steep (2:1 or steeper)
Short (10 ft or less)	D. Need not be designed by a structural engineer M. May be mowed	D. Need not be designed by a structural engineer M. May be mowed*	D. Need not be designed by a structural engineer M. May be kept as unmowed vegetation
Medium (11-20 ft)	D. Need not be designed by a structural engineer M. May be mowed	D. Need not be designed by a structural engineer M. May be mowed*	D. Shall be designed by a structural engineer M. May be kept as unmowed vegetation and/or structurally protected
Medium Tall (21-30 ft)	D. Need not be designed by a structural engineer M. May be mowed	D. Shall be designed by a structural engineer M. May be kept as unmowed vegetation	D. Shall be designed by a structural engineer M. May be kept as unmowed vegetation and/or structurally protected
Tall (40 ft or greater)	D. Shall be designed by a structural engineer M. May be kept as unmowed vegetation	D. Shall be designed by a structural engineer M. May be kept as unmowed vegetation	D. Shall be designed by a structural engineer M. May be kept as unmowed vegetation and/or structurally protected

(Credit: *2002 Connecticut Guidelines for Soil Erosion and Sediment Control*)

Design Criteria

Reverse Slope Benches or Diversions

- Benches shall be designed with a reverse slope of 5:1 or flatter to the toe of the upper slope and with a minimum of one (1) foot in depth. Bench gradient to the outlet shall be between 2 percent and 3 percent, unless accompanied by appropriate design and computations. See **Figure 3.**
- Benches shall be a minimum of six feet wide to provide for ease of maintenance.
- The flow length within a bench shall not exceed 800 feet unless accompanied by appropriate design and computations (See **Diversions)**.
- Benches shall be located to divide the slope face as equally as possible and shall convey the water to a stable outlet (see **Convey Runoff section**).
- Soils, seeps, rock outcrops, etc., shall also be taken into consideration when designing benches.

Figure 3. Reverse Slope Benches

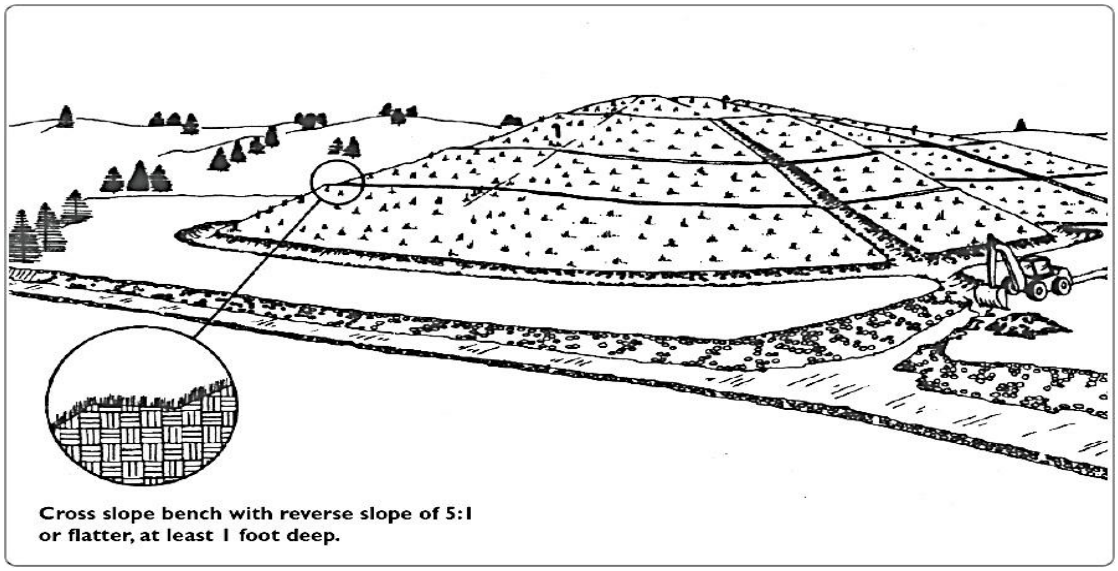

(Credit: *2002 Connecticut Guidelines for Soil Erosion and Sediment Control*)

Cut Slopes in Rippable Rock

- Cut slopes occurring in rippable rock shall be serrated. The serrations shall be made with conventional equipment as the excavation is made.
- Each step or serration shall be constructed on the contour and will have steps cut at nominal two-foot intervals with nominal three-foot horizontal shelves. These steps will vary depending on the slope ratio or the cut slope. The nominal slope line is 1½: 1.
- Overland flow shall be diverted from the top of all serrated cut slopes and carried to a suitable outlet. See **sub-sections called Convey Runoff, Outlet Protection, and Inlet Protection.**
- The steps will weather and act to hold moisture, lime, fertilizer, and seed thus producing a much quicker and longer-lived vegetative cover and better slope stabilization.

Surface Water

Surface water shall be diverted from the face of all cut and/or fill slopes by the use of diversions, ditches and swales or conveyed down slope by the use of a designed structure, except where:

- The face of the slope is or shall be stabilized and the face of all graded slopes shall be protected from surface runoff until they are stabilized;
- The face of the slope shall not be subject to any concentrated flows of surface water such as from natural drainage ways, graded swales, downspouts, etc; or
- The face of the slope will be protected by special erosion control materials, sod, gravel, riprap, or other stabilization method.

Subsurface Drainage

Subsurface drainage shall be provided where necessary to intercept seepage that would otherwise adversely affect slope stability or create excessively wet site conditions.

Installation Requirements

Sedimentation and Erosion Control

- Stockpiles, borrow areas, and spoil areas shall be shown on the plans and protected appropriately.
- All graded or disturbed areas, including slopes, shall be protected during clearing and construction in accordance with the soil erosion and sediment control plan until they are adequately stabilized.
- All erosion and sediment control measures shall be constructed, applied and maintained in accordance with the sediment control plan.

Fill Areas

- Areas to be filled shall be cleared, grubbed, and stripped of topsoil to remove trees, vegetation, roots, or other objectionable material.
- All fills shall be compacted as required to reduce erosion, slippage, settlement, subsidence, or other related problems. Fill intended to support buildings, structures, and conduits, etc., shall be compacted in accordance with local requirements or codes.
- All fill shall be placed and compacted in layers not to exceed 9 inches in thickness.
- Except for approved landfills or nonstructural fills, fill material shall be free of frozen particles, brush, roots, sod, or other foreign objectionable materials that would interfere with, or prevent, construction of satisfactory fills.
- Frozen material or soft, mucky or highly compressible materials shall not be incorporated into fill slopes or structural fills.
- Topsoil required for the establishment of vegetation shall be stockpiled in amount necessary to complete finished grading of all exposed areas.
- Areas that are to be topsoiled shall be scarified to a minimum depth of four inches prior to placement of topsoil.
- Fill shall not be placed on saturated or frozen surfaces.
- Fill slopes that will take more than 1 day to construct should employ a Perimeter Dike and associated Pipe Slope Drain, as may be needed. At the end of the workday divert erosive stormwater runoff away from the unstable slope to a stable discharge point.

Stabilization

- All benches shall be kept free of sediment during all phases of development.
- Seeps or springs encountered during construction shall be handled in accordance with approved methods.
- All graded areas shall be permanently stabilized immediately following finished grading.
- All disturbed areas shall be stabilized structurally or vegetatively in compliance with the approved vegetative and/or structural measure(s).

Inspection, Maintenance, and Removal Requirements

- Inspect and maintain all associated erosion and sediment measures implemented during land grading operations according to their respective requirements.
- During all phases of construction keep reverse slope benches free of sediment.

Retaining Walls

(Photo Credit: US EPA)

Definition

- Retaining walls create vertical or near vertical walls to hold back (retain) material.
- Retaining walls may be made of railroad ties, gabions, mortared block or stone, natural stone, precast cellular blocks, modular retaining wall blocks, cast-in-place reinforced concrete and prefabricated materials.
- Vegetated retaining walls utilize cellular confinement units or gabions. Usually low maintenance vegetation is chosen for such applications.

Purpose

- To permanently stabilize challenging slopes, prevent soil movement, and provide slope protection;
- To help maximize use of space at the base and at the top of the wall;
- Low retaining structures at the toe of a slope make it possible to grade the slope back to a more stable angle that can be successfully revegetated without loss of land. Such structures can also protect the toe against scour and prevent undermining of the cut slope;
- Short structures at the top of a fill slope can provide a more stable road bench or extra width to accommodate a road shoulder;
- To provide drainage through the use of granular backfill.

Applicability

- Steep or sloping sites;
- Where space (or right-of-way) is limited;
- Sites that will not allow slope shaping and seeding for stabilization;
- Slopes that demonstrate seepage problems or experience erosive conditions at the toe;

> **Note:** For slopes where wall construction in not an option, turf reinforcement mats, cellular confinement products, or erosion control blankets may be able to be used.

Note: Retaining walls are major structural features, and proper engineering is essential. Provision must be made for proper drainage and also for stabilizing the soils behind the wall. All retaining walls require a stamp from a licensed design professional (e.g. professional engineers, architects and landscape architects registered to practice in the state of Rhode Island and their design responsibilities are codified within their respective registration laws).

Planning and Design Requirements

Design Considerations

The design of any retaining wall structure must address the aspects of foundation bearing capacity, sliding, overturning, drainage and loading systems. These are complex systems; all retaining walls shall be designed by a licensed professional engineer.

- Bearing Capacity: A minimum factor of safety of 1.5 should be maintained as the ratio of the ultimate bearing capacity to the designed unit loading. Spread footings and other methods may be used to meet factor requirements.
- Sliding: A minimum factor of 2.0 should be maintained against sliding. This factor can be reduced to 1.5 when passive pressures on the front of the wall are ignored.
- Overturning: A minimum factor of safety of 1.5 should be used as the ratio of the resisting moment (that which tends to keep the wall in place) to the overturning moment.
- Drainage: Unless adequate provisions are made to control both surface and groundwater behind the retaining wall, a substantial increase in active pressures tending to slide or overturn the wall will result. When backfill is sloped down to a retaining wall, surface drainage should be provided. Drainage systems with adequate outlets should be provided behind retaining walls that are placed in cohesive soils. Drains should be graded or protected by filters so soil material will not move through the drainage system.
- Load systems: Several different loads or combination of loads need to be considered when designing a retaining wall. The minimum load is the level backfill that the wall is being constructed to retain. Its unit weight will vary depending on its composition.

Additional loads such as line loads, surcharge loads, or slope fills, will add to make the composite design load system for the wall.

See **Figure 1** for an illustration of a generic retaining wall.

Figure 1. Generic Retaining Wall

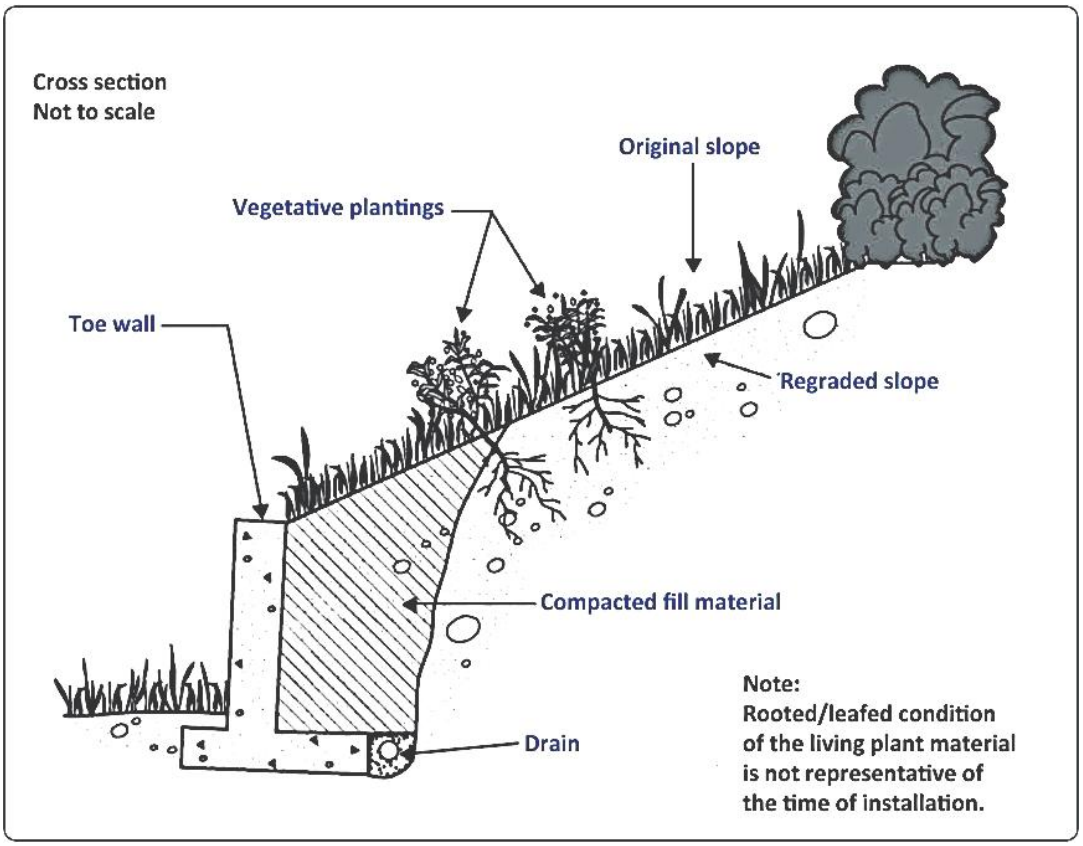

(Credit: *2002 Connecticut Guidelines for Soil Erosion and Sediment Control*)

Possible Materials

With many choices available for wall systems, it is important to match the wall design with the functional, budgetary and aesthetic needs and goals of the site and site owner. The decision to use a dry masonry, mortared masonry, or concrete retaining wall will be greatly influenced by the familiarity and experience of local practitioners. Consideration should be given to hazard potential, load conditions, soil parameters, groundwater conditions, site constraints, and aesthetics.

- Gabions: Gabions, flexible wire mesh baskets composed of rectangular cells filled with riprap or other selected (hard, durable) rock. Gabions are used where erosion potential is high. Therefore, construction must be sequenced so that the gabions are constructed before threatened areas are exposed to erosive forces. Protective coating may be required for the wire depending on corrosion potential of the surrounding environment. See **Appendix M, Gabions.**
- Low Masonry or Concrete: Masonry or poured concrete retaining walls are rigid structures that do not tolerate differential settlement or movement and are appropriate only at sites where little additional movement is expected. Because of this limitation, their use is more restricted than gabion walls or reinforced soil systems. The decision to use a dry masonry, mortared masonry, or concrete retaining wall will be greatly influenced by the familiarity and experience of local practitioners. Masonry or concrete walls can have various cross sections. Gravity walls can be constructed with plain concrete, stone masonry, or concrete with reinforcing bar. Masonry walls that incorporate mortar and stone are easier to construct and stronger than dry stone

masonry walls, but they do not drain as well (Hearn and Weeks 1997). Cantilever walls use reinforced concrete and have a stem connected to a base slab (Das 2007).

- Precast Units: Manufactured precast units require a site specific design and must be placed in compliance with manufacturers installation instructions.
- Modular Retaining Wall Blocks: Manufactured retaining wall blocks must be anchored, pinned and installed in strict compliance with manufacturers written installation details.
- Three-Dimensional Cellular Confinement: Cellular confinement walls are designed specifically for earth retention, but also to be vegetated. These systems must be installed adhering to the written instructions of the manufacturer.
- Mechanically Stabilized Earth Walls: fabrics and be configured into soil lifts or wraps. These wrapped soil lifts can be stacked and designed to allow for the construction of very steep slopes. Mechanically stabilized earth walls after often used in highway construction, particularly on or around bridge and overpass construction.

Installation Requirements

- Retaining walls are major structural features, and proper engineering is essential. Plans for walls taller than 3-4 feet will normally require a stamp from a licensed design professional (e.g. professional engineers, structural engineer, architects and landscape architects registered to practice in the state of Rhode Island and their design responsibilities are codified within their respective registration laws).
- It is extremely important to comply with manufacturers written installation instructions. From foundation to completed wall, it is critical to follow all the specified steps.
- Drainage must be considered as an integral part of any retaining wall installation. Both subsurface and surface drainage must be carefully mapped out. Subsurface drainage must be designed to meet the soil conditions at the site of the wall, and must be protected from clogging.

Inspection, Maintenance, and Removal Requirements

- Inspection should be comprehensive during the construction process and the wall should also be thoroughly inspected upon completion.
- Once in place, a retaining wall should require little maintenance, but should be inspected annually for signs of tipping, clogged drains, or soil subsidence. If such conditions exist, they should be corrected immediately.
- Vegetated walls will require maintenance.

Slope Protection

(Photo Credit: US EPA)

Definition

- Applying materials for permanent structural protection of slopes from erosion. Materials may include, but are not limited to stone aggregates, rip-rap, erosion control blankets, geotextile, cellular confinement systems, mattresses (gabions and others), and articulating blocks

Purpose

- To permanently stabilize slopes that cannot be reliably stabilized with vegetation alone;
- To permanently reduce erosion and prevent shallow surface slope failures;
- To protect the soil surface from the erosive forces of concentrated runoff.

Applicability

- Where highly erodible soils and/or steep slopes provide unfavorable conditions for vegetative stabilization alone;
- Where herbaceous plant growth is to be discouraged or is impractical to establish;
- For slopes 3:1 or flatter;
- **Not** for use in concentrated flow areas. If concentrated flows exist, use Lined Waterway measures.

Note: For slopes steeper than 3:1, for slopes with excessive seepage, and for systems employing filter blankets, an engineer's review of slope stability and system parameters is required.

Planning and Design Requirements

An engineering review is required when the slope to be protected is steeper than 3:1 or when excessive seepage is expected. If the engineering review results in a concern about slope stability, then other slope stabilization measures shall be utilized, possibly in combination with this measure.

If concentrated flows of water or significant volumes of water are planned to drain across the slope, the measures described in this section may not be adequate and should be evaluated regarding their ability to manage that flow. Measures as described in **Lined Waterways,** should be considered in those applications.

Each of the structural controls outlined in this section are ultimately dependent upon the stability of the subgrade. When these measures fail, it is often a function of the subgrade below these structures eroding first as a result of water moving between the subgrade and the control. As a result, it is critical that the designs of these controls incorporate features that protect the subgrade from eroding.

Materials

Stone Aggregate

Stone used in stone slope protection shall consist of crushed stone or crushed gravel that meets the RIDOT Standard Specification M.01.09, Table 1, as provided in **Figure 1**.

Figure 1. Specification for Stone for Stone Slope Protection

Sieve Size	Gradation - % Passing
2 1/4"	100
2"	90-100
1 1/2'	30-55
1 1/4"	0-25
1"	0-5

(Credit: *2002 Connecticut Guidelines for Soil Erosion and Sediment Control*)

Riprap

See Appendix L.

Actual riprap size (R-1 to R-8) shall be determined based on what is required for slope stability.

Erosion Control Blankets

- **Temporary erosion control blankets** (see **Appendix N** for more information) shall be composed of fibers and/or filaments that:
  - Are biodegradable or photodegradable within two years but without substantial degradation over the period of intended usage (five months maximum);

- Are mechanically, structurally or chemically bound together to form a continuous matrix of even thickness and distribution that resists raindrop splash and, when used with seedings, allows vegetation to penetrate the blanket;
- Are of sufficient structural strength to withstand stretching or movement by wind or water when installed in accordance with the manufacturer's recommendations;
- Are free of any substance toxic to plant growth and unprotected human skin or which interferes with seed germination;
- Contain no contaminants that pollute the Air or Waters of the State when properly applied; and

Materials shall be selected as appropriate for the specific site conditions in accordance with manufacturer's recommendations. Use of any particular temporary erosion control blanket should be supported by manufacturer's data that confirms the blanket meets these material specifications and will provide the short term erosion control capabilities necessary for the specific project.

- **Permanent turf reinforcement mats** (see **Appendix K** for more information) shall be composed of fibers and/or filaments that:
  - Consist of ultraviolet light-resistant polymers or synthetic fibers mechanically, structurally, and/or chemically bound together for a continuous matrix of consistent thickness;
  - Contain no contaminants that pollute the Air or Waters of the State when properly installed; and
  - Be free of any substance toxic to plant growth and unprotected human skin or which interferes with seed germination.

  Materials shall be selected as appropriate for the specific site conditions in accordance with manufacturer's recommendations. Use of any particular permanent turf reinforcement mat should be supported by manufacturer's test data that confirms the mat will provide the long term erosion control capabilities necessary for the specific project.

Cellular Confinement Systems

Cellular confinement systems are manufactured products that confine native or select fill materials. A variety of fill materials can be placed within these systems: plantable soil, sand, aggregate, etc. Materials shall be permanent and shall be selected as appropriate for the specific site conditions in accordance with manufacturer's recommendations. **Figure 2** shows a typical variety of cellular confinement system.

Figure 2. Typical Cellular Confinement System

(Credit: US EPA)

Gabion Mattresses

Gabions are manufactured systems that consist of wire cages that are either be protected or unprotected with a coating and are used to confine stone aggregates. Material specifications for the gabion and stone aggregate shall meet the requirements of the manufacturer. For aesthetic purposes, facing stone may be rounded or otherwise shaped, providing it is larger than the largest gabion mesh opening. See **Appendix M** for more information.

Articulating Blocks

Articulating Concrete Block (ACB) revetment systems are manufactured systems that consist of concrete blocks that form open cells that can be filled with plantable soil, sand, aggregate, etc. The blocks can be made in a variety of shapes and thicknesses. The thickness of available blocks typically ranges from 4 inches to 9 inches. The blocks are cast into interlocking or non-interlocking shapes and may be cabled into mats or can be non-cabled. The blocks may be open cell or closed cell. Open cells allows soil to be placed into them or for sediment to fill in the open areas and become vegetated. Closed-cell block systems provide an open area of approximately 10 percent and allow for some trapped soil and vegetation growth. Material specifications shall meet the requirements of the manufacturer. ACB systems shall also only be used consistent with the manufacturer's recommendations.

Design Considerations

General

The amount of water draining onto the work area should be minimized by the maximum extent practical by use of diversions and other similar measures.

Since slope protection is used where erosion potential is high, sequence construction so that the protection is placed prior to exposed areas being subject to erosive forces such as water. Plan to disturb areas where protection is to be placed only when final preparation and placement of the protection will follow immediately behind the initial disturbance.

Stone

Typically, stone slope protection is used when steep slopes and /or erodible soils will not reasonably allow permanent vegetative measures to be established without eroding away. This measure should also be considered where competing vegetation is to be discouraged, as with landscape plants. Where water has the potential to wash out underlying subgrade materials, stone slope protection systems shall have a filter blanket between the system and subgrade in order to protect against soil loss in the subgrade.

Rip-Rap

Riprap for slope stabilization shall be designed so that the natural angle of repose of the stone mixture is steeper than the gradient of the slope being stabilized (see **Figure 20-3** below for angles of repose for various shaped riprap). An engineering analysis should be completed to assess adequate riprap size and thickness to stabilize the slope.

The minimum thickness of the riprap layer shall be 1.5 times the maximum stone diameter but not less than 12 inches.

Where water has the potential to wash out underlying subgrade materials, riprap slope protection shall have a filter blanket between the system and subgrade in order to protect against soil loss in the subgrade.

Figure 3. Angle of Repose of Riprap in Terms of Size and Shape of Stone

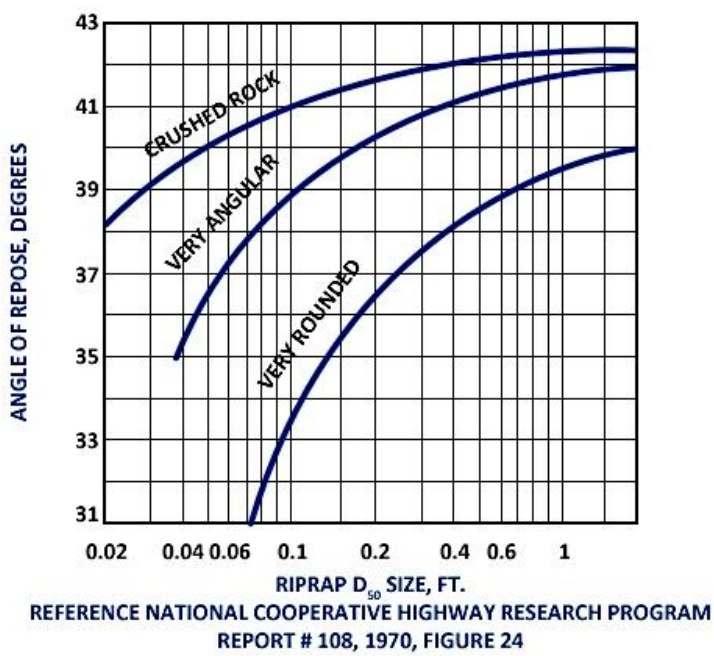

(Credit: National Cooperative Highway Program)

Erosion Control Blankets

Temporary Erosion Control Blankets

Erosion control blankets are used when a vegetated slope is desired, but use of vegetation alone will not provide long-term stabilization of the slope. The use of these products shall be in accordance with manufacturer's recommendations.

Permanent Erosion Control Blankets

Where turf reinforcement mats are used in areas of concentrated flows an engineered design is required. For other applications, the use of these products shall be in accordance with the manufacturer's recommendations.

Cellular Confinement Systems

Cellular confinement systems shall be designed and used in accordance with the specific manufacturer's recommendations. Where water has the potential to wash out underlying subgrade materials, cellular confinement systems shall have a filter blanket between the system and subgrade in order to protect against soil loss in the subgrade.

Gabion Mattresses

A pH below 5 for the soil and water may determine whether an additional protective coating is required for the wire.

The design shall be in accordance with the most recent version of the USDA Natural Resources Conservation Service Construction Specification 64 entitled "Wire Mesh Gabions and Mattresses" available at: www.ar.nrcs.usda.gov/technical/engineering_construction_specs.html and in accordance with the manufacturer's recommendations.

Where water has the potential to wash out underlying subgrade materials, gabion mattresses shall have a filter blanket (geotextile or gravel filter) between the system and subgrade in order to protect against soil loss in the subgrade.

Articulating Concrete Blocks

ACB systems shall be designed in accordance with the manufacturer's specifications and the US Army Corps of Engineers Technical Supplement 14L that can be located at the following site: http://www.nae.usace.army.mil/reg/nrrbs/TECHNICAL-SUPPLEMENTS/TS14L.pdf

Where water has the potential to wash out underlying subgrade materials, ACB systems shall have a filter (geotextile or gravel filter) between the system and subgrade in order to protect against soil loss in the subgrade.

Geosynthetics and Filter Blankets

To prevent soil movement through the riprap or gabion systems, filter blankets or bedding should always be provided.

A filter blanket or bedding is a granular stone layer(s) and a geotextile. A determination of the need for a filter blanket is made by comparing particle sizes of the overlying material and the underlying material in accordance with the criteria below.

Granular bedding layer: A granular (stone) bedding is typically placed between the riprap and geotextile in order to protect the geotextile from placed riprap. This material consists of a well graded gravel. For large stone, 12 inches or greater, a 6-inch minimum layer of filter or bedding material to prevent damage to the material from puncture. The filter material shall be a minimum of 6 inches thick.

Geotextile (Specifically Intended to Prevent Piping): Shall be placed along the subgrade between the soils to be protected and riprap bedding layer. The geotextile shall not be used on slopes steeper than 1-1/2 : 1 as slippage may occur. The following particle size relationships must exist:

- For geotextile adjacent to base materials containing 50% or less (by weight) of fine

particles (less than 0.075mm):

$$\frac{d_{85}\ base\ (mm)}{EOS\ geotextile(mm)} > 1$$

where EOS = Equivalent Opening Size to a U.S. Standard Sieve Size and Total open area of geotextile is less than 36%.

- For geotextile adjacent to all other soils: a) EOS less than U.S. Standard Sieve No. 70. b) Total open area of geotextile is less than 10%.

No geotextile should be used with an EOS smaller than U.S. Standard Sieve No. 100.

Additional design criteria for geotextiles are contained in the latest edition of Designing with Geosynthetics by Robert M. Koerner.

Geotextiles are broken into woven and non-woven geotextiles and thence into various classes. The fabric may be made of woven or nonwoven monofilament yarns and should meet the following minimum requirements unless a professional engineer determines that a geotextile with varying specifications are required for an application.

- Thickness 20-60 mils
- Grab strength 90-120 lbs
- Conform to ASTM D-1682 or ASTM D-177

In cases where failure of subgrade soils would result in substantial risk to constructed improvements or natural resources, a professional engineer should design the filter blanket to minimize the risk of failure.

Installation Requirements

General

- Install diversions and/or other controls as required to divert runoff from slope areas prior to any disturbance. Water shall be diverted in a manner that safely conveys water across appropriately stabilized surfaces based on the volume of flow that is being managed.
- Install erosion control devices as appropriate to manage any potential movement of soil from the slopes that will be disturbed.
- Grade slope areas to be stabilized to final sub-grade elevations (the elevation at the control/soil interface in accordance with the approved plan.

Stone

- Slope the area on which the stone is to be placed to a reasonably true surface prior to placing any stone.
- Install filter blanket directly on completed subgrade if required.
- Spread the stone by any suitable means which will not fail by slippage or displacement.
- Track first course of stone into soil subgrade if no filter blanket.

Rip-Rap

- Rip-Rap shall be installed in accordance with RIDOT Standard Specification 920 as well as the following additional requirements.

- Install filter blanket directly on completed subgrade if required.
- Place rip-rap in a manner that does not damage geotextile or other filter materials. Damaged materials shall be replaced.
- Place it to its full course thickness in one operation so that it produces a dense layer of well-graded mass of stone with a minimum of voids. The desired distribution of stones throughout the mass may be obtained by selective loading at the quarry, controlled dumping of successive loads during final placing, or by a combination of these methods. Do not place the riprap in layers or use chutes or similar methods to dump the riprap which are likely to cause segregation of the various stone sizes. Ensure the finished slope is free of pockets of small stones or clusters of large stones. Hand placing may be necessary to achieve the required grades and a good distribution of stone sizes. Ensure the final thickness of the riprap blanket is within plus or minus 0.25 of the specified thickness.

Erosion Control Blankets

Temporary Erosion Control Matting

Temporary erosion control blankets shall be placed in accordance with the manufacturer's recommendations. Ensure that the orientation and anchoring of the blanket is appropriate for the site, accounting for direction of flow. Where landscape plantings are planned, lay the blanket first and then plant through the blanket in accordance with the standards in the guidelines. Inspect the installation to insure that all lap joints are secure, all edges are properly anchored and all staking or stapling patterns follow manufacturer's recommendations.

Permanent Erosion Control Matting

Prepare site and install in accordance with manufacturer's requirements accounting for direction of flow. Establish vegetative cover in accordance with the applicable measure found in the standards in these guidelines. Modify the sequence of application to meet the manufacturer's requirements for the specific installation. Inspect the installation to ensure that the mat is in direct contact with the prepared soil surface, all lap joints are secure, all edges and interior mats are properly anchored and/or treated, and backfilling follows the manufacturer's requirements, and the vegetative soil measures used have been correctly applied.

Cellular Confinement Systems

Prepare site and install in accordance with manufacturer's requirements. If plantable soils are used, soils shall be planted with native vegetation selected for the stressors at that particular site and application. Plantings shall be placed in accordance with the standards in these guidelines.

Gabion Mattresses

Installation shall be in accordance with USDA Natural Resources Conservation Service Construction Specification 64 and manufacturer's specifications. Critical elements of installation include the following:

- Gabions shall be carefully filled with rock by machine or hand methods to ensure alignment, avoid bulges, and provide a compact mass that minimizes voids. Machine placement requires supplementing with hand work to ensure the desired results. The cells in any row shall be filled in stages so that the depth of rock placed in any one cell does not exceed the depth of rock in any adjoining cell by more than 12 inches. Along the exposed faces, the outer layer of stone shall be carefully placed and arranged by hand to ensure a neat, compact placement with a uniform appearance.
- The last layer of rock shall be uniformly leveled to the top edges of the gabions. Lids

shall be stretched tight over the rock filling using only approved lid closing tools as necessary. The use of crowbars or other single point leverage bars for lid closing is prohibited as they may damage the baskets. The lid shall be stretched until it meets the perimeter edges of the front and end panels. The gabion lid shall then be secured to the sides, ends, and diaphragms with spiral binders, approved alternate fasteners, or lacing wire wrapped with alternating single and double half-hitches in the mesh openings.

- Any damage to the wire or coatings during assembly, placement, and filling shall be repaired promptly in accordance with the manufacturer's recommendations or replaced with undamaged gabion baskets.

Articulating Blocks

ACB systems shall be installed in accordance with the manufacturer's specifications and the US Army Corps of Engineers Technical Supplement 14L that can be located at the following site: http://www.nae.usace.army.mil/reg/nrrbs/TECHNICAL-SUPPLEMENTS/TS14L.pdf.

Inspection, Maintenance, and Removal Requirements

Stone Slope Protection

Inspect periodically to determine if scour has occurred beneath the stone or filter blanket or dislodged any of the stone or filter blanket materials. Once a stone slope protection installation has been completed, it should require very little maintenance. Periodic removal of woody vegetation (e.g. annual) may be required to insure the integrity of the riprap.

If slippage or displacement occur, conduct an engineering analysis to determine the cause. Overland water flow, excessive seepage, deep slope failure or surficial structural failure should be investigated by an engineer. Repair failed areas and/or implement alternate measures to obtain stability.

Riprap Slope Protection

Inspect periodically to determine if scour has occurred beneath the riprap or filter blanket or dislodged any of the riprap or filter blanket materials. Once a riprap installation has been completed, it should require very little maintenance. Periodic removal of woody vegetation (e.g. annual) may be required to insure the integrity of the riprap.

If slippage or displacement occur, conduct an engineering analysis to determine the cause. Overland water flow, excessive seepage, deep slope failure or surficial structural failure should be investigated by an engineer. Repair failed areas and/or implement alternate measures to obtain stability.

Temporary Erosion Control Blankets

Inspect temporary erosion control blankets at least once a week and within 24 hours of the end of a storm with a rainfall amount of 0.5 inch or greater for failures during the period of time that they are required until the slope is permanently stabilized. Blanket failure has occurred when (1) soils and/or seed have washed away from beneath the blanket and the soil surface can be expected to continue to erode at an accelerated rate, and/or (2) the blanket has become dislodged from the soil surface or is torn.

If washouts or breakouts occur, reinstall the blanket after regrading and reseeding, ensuring that blanket installation still meets design specifications. When repetitive failures occur at the same location, review conditions and limitations for use and determine if diversions, stone check dams or other measures are needed to reduce failure rate.

Repair any dislodged or failed blankets immediately.

Permanent Erosion Control Blankets

Inspect permanent turf reinforcement mats at least once a week and within 24 hours of the end of a storm with a rainfall amount of 0.5 inch or greater for failures until the turf has become established. Mat failure has occurred when soils and/or seed have washed away from beneath or within the mat resulting in a soil surface that can be expected to continue to erode or when the mat has become dislodged from the soil surface. When repetitive failures occur at the same location, review conditions and limitations of turf reinforcement mats and determine if additional controls, (e.g. diversions, stone barriers) are needed to ensure success. Repair mat failures within one work day.

After the turf has become established, inspect annually or after major storm events.

Gabions

Inspect periodically to determine if high flows have caused scour beneath the gabions or filter blanket or dislodged any of the filter blanket materials. Once a gabion installation has been completed, it should require very little maintenance. Periodic removal of woody vegetation (e.g. annual) may be required to insure the integrity of the gabion.

Cellular Confinement Systems

Inspect periodically to confirm system is performing as planned. Periodic removal of woody vegetation (e.g. annual) may be required to insure the integrity of the cellular confinement system.

Articulated Concrete Blocks

Inspect periodically to confirm system is performing as planned. Periodic removal of woody vegetation (e.g. annual) may be required to insure the integrity of the cellular confinement system.

Surface Roughening

(Photo Credit: RI DOT)

Definition

- Roughening and "un-compacting" soil surface by creating horizontal ridges and depressions perpendicular to the direction of the slope (on the contour), or by not fine-grading slopes
- Roughening (also known as "grooving" or "tracking") consists of using any appropriate implement or machine, which can be safely operated on the slope and which will not cause undue compaction, to create a series of tracks. Suggested implements include discs, tillers, spring-tooth harrows, dozer track cleats or the teeth on a frontend loader bucket.

Purpose

- To promote the establishment of vegetative cover with seed;
- To decrease runoff velocity, reduce sheet erosion, increase infiltration, and provide for sediment trapping;
- To provide cooler, moister microclimates to aid seed germination;
- To protect lime, fertilizer and seed from the erosive effects of rainfall and wind;
- To reduce storm water runoff velocity and increase infiltration.

Applicability

- On disturbed slopes whose gradients are between 2:1 and 4:1, inclusive.
- Not for slopes that are to be finished with a stable rock face, stone slope protection, or sod.
- Not recommended on soils with a high clay content, since tracking machinery can cause undue compaction of surface soil.

Planning and Design Requirements

General Considerations

Different methods can be used for achieving a roughened soil surface on a slope. The selection of an appropriate method depends upon the type of slope, slope steepness, mowing requirements, and whether it is a cut or fill slope.

It is important to avoid excessive compaction of the soil surface when roughening the surface. Tracking with bulldozer treads is preferable to not roughening at all, but is not as effective as other forms of roughening, as the soil surface is severely compacted and runoff may be increased.

Areas Which Will Not Be Mowed

- Cut Slopes: Grooves shall not be less than 3 inches deep nor further than 15 inches apart.
- Fill Slopes: Shall be grooved or allowed to remain rough as they are constructed.

Areas Which Will Be Mowed

- Excessive roughness is undesirable where mowing is planned. Areas to be seeded and mowed may be roughened with shallow depressions such as those that remain after harrowing, raking, or using a cultipacker-seeder.
- Depressions formed by such equipment should be at least 1 inch deep and not further than 12 inches apart.
- The final pass of any equipment shall be on the contour (perpendicular to the direction of the slope).

Installation Requirements

Cut Slopes

Grooves may be made with any appropriate implement which can be safely operated on the slope and which will not cause undue compaction. Suggested implements include discs, tillers, spring-tooth harrows, dozer track cleats or the teeth on a frontend loader bucket.

Fill Slopes

As lifts of the fill are constructed, soil and rock materials may be allowed to fall naturally onto the slope surface after filling is completed. After filling is completed, if the surface is not sufficiently roughened, groove or track the surface the same as for cut slopes. Slopes shall not be bladed or scraped to produce a smooth, hard surface, except where slopes are meant to be used as a travelway for vehicles and additional erosion and sediment controls are installed.

Roughening With Tracked Machinery

See **Figure 1**. Sandy soils do not compact severely, and may be tracked, but in sandy soils tracking may not be as effective as the other roughening methods described. When tracking, it shall be done by operating tracked machinery up and down the slope to leave horizontal depressions in the soil. As few passes as possible of the machinery should be made to minimize compaction.

Figure 1. Roughening with Tracked Machinery

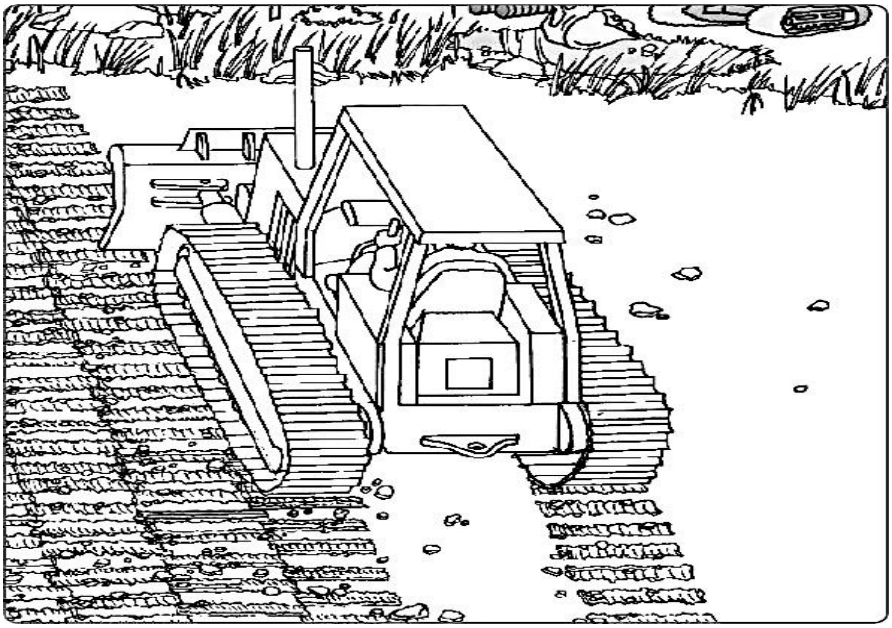

(Credit: *2002 Connecticut Guidelines for Soil Erosion and Sediment Control*)

Stabilizing with Seed and/or Mulch

Immediately following surface roughening, protect the soil from erosion by seeding and/or mulching (See **in the Non-Vegetative Cover and Vegetative Cover sub-sections**).

Inspection, Maintenance, and Removal Requirements

Inspect and maintain in accordance with the final surface protection measure(s) used.

Branch Packing

(Photo Credit: Adaptation of NY State Standards and Specifications for Erosion and Sediment Control, 2005)

Definition

- Branch packing consists of alternate layers of live branch cuttings and tamped backfill between long posts driven in to the ground for support.

Purpose

- To provide repair to small, localized slumps, slips, and holes in existing slopes by filling in the failed area with plant materials and soil.

Applicability

- This is an appropriate technique for repairing slip areas that do not exceed 4 feet deep or 6 feet wide.
- Not to be used as a slope stability measure if structural embankment support is needed.

Planning and Design Requirements

- Selection of materials used for branch packing should be identified for appropriateness and availability prior to start of construction. Consult with local plant specialist, landscape architects or URI specialist for plant selection.
- The live branch cuttings shall be 0.5-2 inches in diameter and long enough to touch the undisturbed soil at the back of the area to be repaired.

Installation Requirements

- Beginning at the bottom of the slip area, 4-6 inch layers of live branch cuttings are placed in angled layers, 1.5 to 3 feet apart.
- Compacted moist soil is placed between the layers. When possible use native soil materials that meet the topsoil definitions or use amended soil.
- Live branch cuttings should extend 4-6 inches beyond the finished backfill grade.

- Wooden posts should be used to secure the plant material in place. They should be 6-8 feet long and 3-4 inches in diameter. If lumber is used, it shall be a minimum standard two by four.
- Wooden posts shall be driven vertically 3 feet deep and placed in a grid pattern 1-2 feet apart.

Inspection, Maintenance, and Removal Requirements

Due to the susceptibility of plant materials to the physical constraints of the site, climate conditions, and animal populations, it is necessary to inspect installations frequently. This is especially important during the first year or two of establishment. Plant materials missing or damaged should be replaced as soon as possible. Sloughs or breaks in drainage pattern should be reestablished for the site as quickly as possible to maintain stability.

Figure 1. Branch Packing

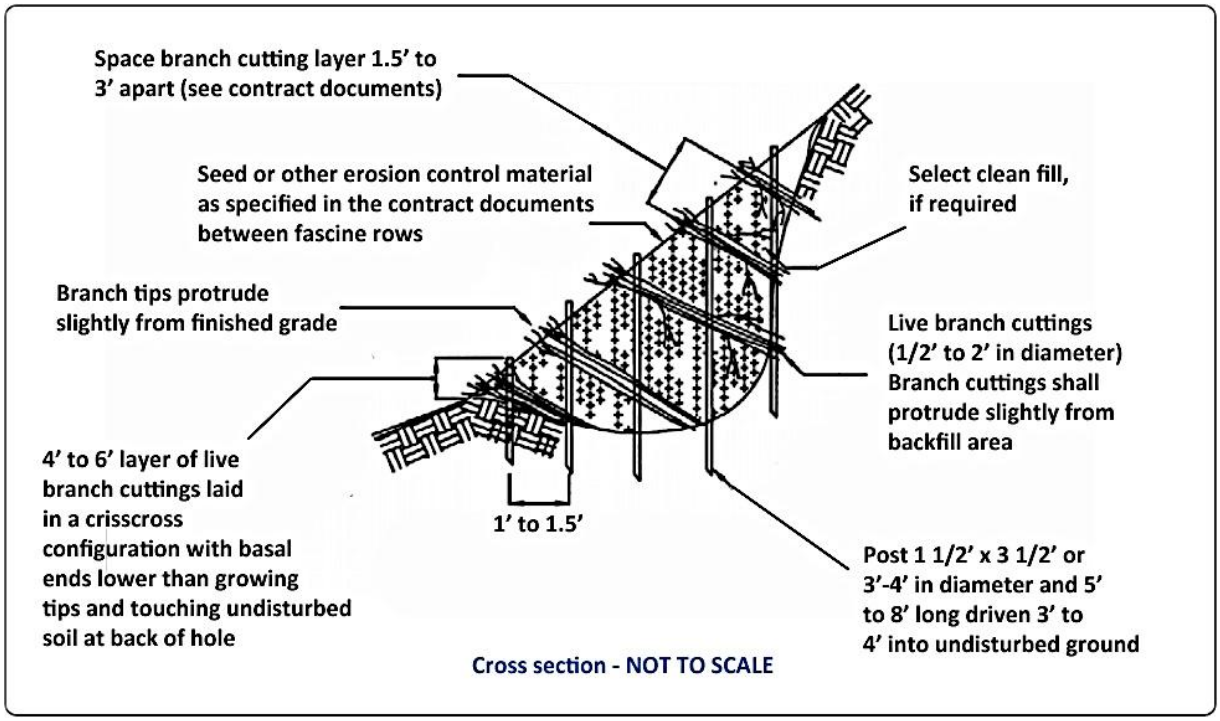

(Credit: Adaptation of NY State Standards and Specifications for Erosion and Sediment Control, 2005)

Brush Layering

(Photo Credit: Adaptation of NY State Standards and Specifications for Erosion and Sediment Control, 2005)

Definition

- Brush layering involves creating and vegetating bulldozed terraces. Each single terrace will have three layers of long live branches with cut ends into the slope and tops protruding outside the finished slope, separated with a thin (3 in.) layer of soil).

Purpose

- To stabilize slopes, trap debris on slope, dry excessively wet sites, and redirect adverse slope seepage by creating horizontal drains.

Applicability

- Slopes above the flow line of streambanks;
- Cut and fill slopes;
- On slopes up to 2:1 in steepness and 20 feet in height.

Planning and Design Requirements

- Selection of materials used for brush layering should be identified for appropriateness and availability prior to start of construction. Consult with local plant specialist, landscape architects or URI specialist for plant selection.
- Brush layer cuttings shall be ½ to 2 inches in diameter and be from dormant plants. No leaf buds shall have initiated growth beyond ¼ and the cambium layer shall be moist, green, and healthy. The cuttings shall be long enough to contact the back of the bench with the growing tips protruding out of the slope face.
- When possible use native soil materials that meet the topsoil definitions or use amended soil.

Installation Requirements

- The spacing requirement for brush layer rows is dependent on the slope steepness and moisture content. Spacing shall conform to **Figure 1**.

Figure 1. Distance between Layers for Different Slope Characteristics

Slope Distance Between Layers (feet)			
Slope H:V	Wet Slope	Dry Slope	Max Slope Length
2:1 to 2.5:1	3'	3'	15'
2.5:1 to 3.5:1	3'	4'	15'
3.5:1 to 4.0:1	4'	5'	25'

(Credit: *2002 Connecticut Guidelines for Soil Erosion and Sediment Control*)

- Starting at the toe of the slope, excavate benches along the contour of the slope. The benches shall range from 2-3 feet wide and the surface of the bench shall be angled so the front edge is higher than the back of the bench (see **Figure 2**). The benches shall be spaced according to the previous table (**Figure 1**).
- Live branch cuttings shall be placed on the bench in a crisscross or overlapping configuration in layers 3-4 inches thick. Care shall be taken not to severely damage the live branch cuttings during installation. Damaged cuttings will be replaced prior to backfilling.
- Backfill shall be placed on top of the live branch cuttings and tamped in 6 inch lifts. Small plate compactors may be used to settle the soil.
- Areas between the rows of brush layers shall be stabilized by seeding or other appropriate erosion control method.
- Sloughs or breaks in drainage pattern should be reestablished for the site as quickly as possible to maintain stability.

Inspection, Maintenance, and Removal Requirements

- Due to the susceptibility of plant materials to the physical constraints of the site, climate conditions, and animal populations, it is necessary to inspect installations frequently. This is especially important during the first year or two of establishment.
- Plant materials missing or damaged should be replaced as soon as possible.

Figure 2. Brush Layering

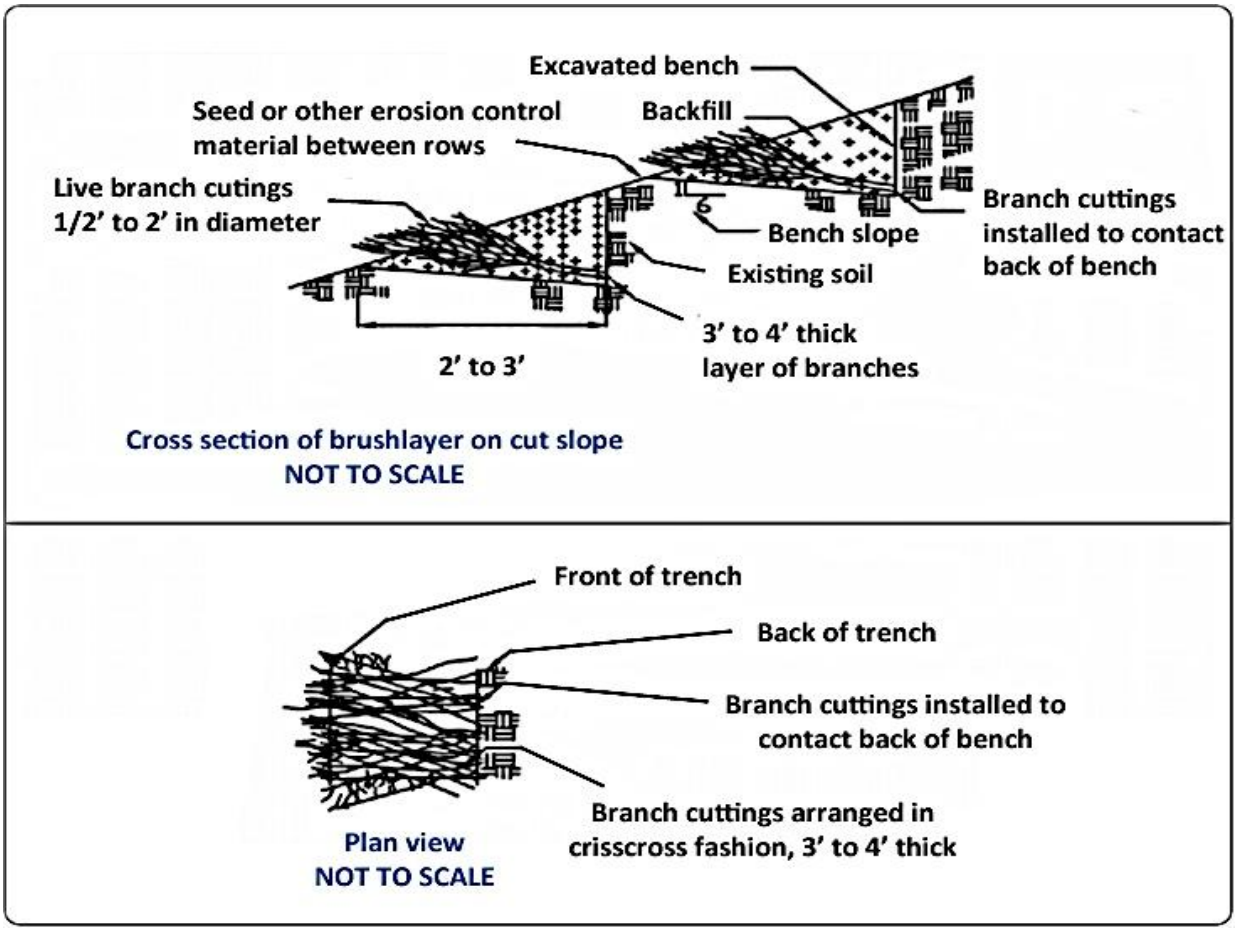

(Credit: *2002 Connecticut Guidelines for Soil Erosion and Sediment Control*)

Brush Mattresses

(Photo Credit: USDA, NRCS)

Definition

- A mulch or mattress of hardwood brush laid on a slope and fastened down with a grid of stakes and wire. The toe below the waterline is anchored by rock.

Purpose

- This living blanket acts as a mulch for seedlings and plantings established in the bank.
- It also prevents soil erosion of sloped surfaces through the generation of a dense stand of woody vegetation.

Applicability

- Brush mattresses are used primarily on streambanks where the velocity is less than 6 feet per second and excessive runoff from streamflow has created erosive conditions.

Note: This measure can resist temporary inundation, but not scour or undercutting.

Planning and Design Requirements

- Layer Thickness: The brush shall be a minimum of 3 inches thick (excluding top soil layer).
- Height: The mattress shall be placed up the bank to the bankfull elevation. The toe of the mattress should be located in a fascine trench.
- Slope**:** The maximum slope shall be 1.5:1.
- Anchoring: The mattress shall be anchored on the slope by a grid of 3-foot stakes driven on 3-foot centers each way. No. 9 wire is then wound between the stakes, which are driven to secure the mattress. The upstream edge of the mattress should be keyed into the bank 2 feet.
- Plant Materials: The plant materials should be native materials. Selection of materials

used for brush mattress should be identified for appropriateness and availability prior to start of construction. Consult with local plant specialist, landscape architects or URI specialist for plant selection.

- Soil: When possible use native soil materials that meet the topsoil definitions or use amended soil.

Installation Requirements

Install as shown in **Figure 1**.

- Prepare slope surface by grading to a uniform, smooth surface, clear of obstruction. Slopes should be graded before the brush mattress is installed.
- Install the fascine toe first, then lay brush beginning at the downstream end of the work.
- The butt end of the brush will be placed upstream and plant materials inclined approximately 30 degrees.
- The upstream edge of the mattress will be keyed into the slope 2 feet.
- Stakes will be driven throughout the mattress on 3-foot centers each way beginning along the toe of the mattress.
- No. 9 wire will be attached to the stakes and tightened to secure the mattress.
- Slope areas above the mattress will be shaped and seeded.

Inspection, Maintenance, and Removal Requirements

- Scheduled inspections the first year are necessary to make sure the anchoring system is sound.
- Broken wire or missing stakes shall be replaced immediately. Any missing toe material missing shall be replaced.

Figure 1. Brush Mattress

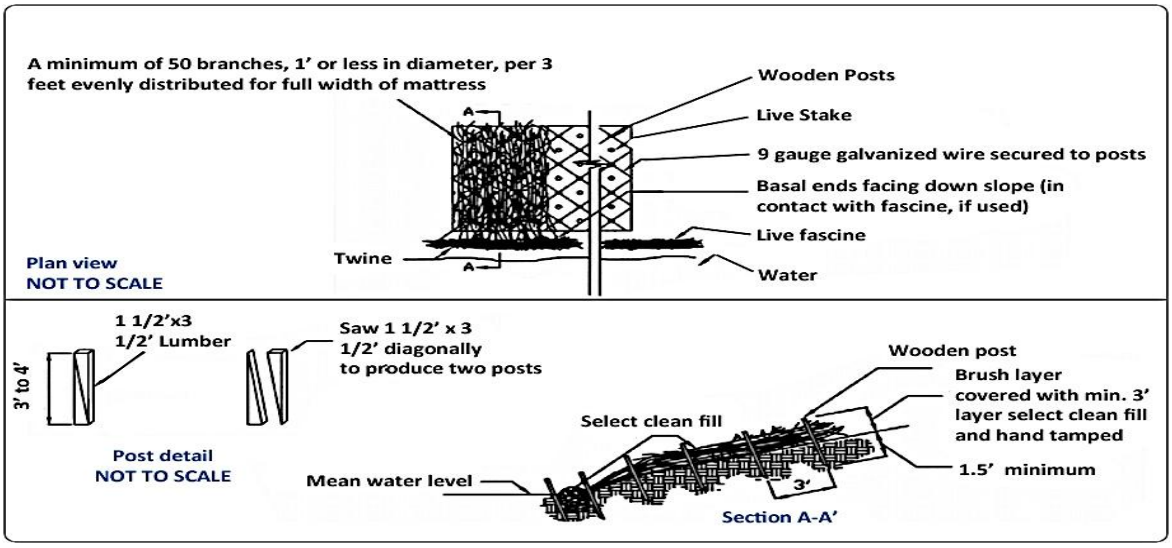

(Credit: *2002 Connecticut Guidelines for Soil Erosion and Sediment Control*)

Fascines

(Photo Credit: US EPA)

Definition

- The placement of groups or bundles of twigs, whips, or branches which are staked into rows of shallow trenches, on the contour, then filled with soil.

Purpose

- To stabilize slopes by slowing water movement down the slope, increasing infiltration, trapping slope sediments, and increasing soil stability with root systems.

Applicability

- On sloping areas such as road cuts, slumped areas, road fills, gullies, and streambanks subject to erosion, seepage, or weathering, which have a low to medium hazard potential should slope failure occur.
- On slopes that are 1:1 or flatter.

Planning and Design Requirements

- Materials: Shall be a native or nursery grown cultivar that is capable of performing the intended function. Selection of materials used for facines should be identified for appropriateness and availability prior to start of construction. Consult with local plant specialist, landscape architects or URI specialist for plant selection. When possible use native soil materials that meet the topsoil definitions or use amended soil.
- Fascines: Shall be made by forming the bundles 8-15 feet long, 4 inches minimum in diameter, from stems no more than 1 inch in diameter.
- Overlap: Fascines should be overlapped at the tapered ends a minimum of 1-foot.
- Vertical Spacing: The spacing of the contours for the fascines is dependent on the

degree of erosion or potential erosion at the site. Factors include slope steepness, soil type, drainage, and existing ground cover. **Figure 1** is a general guide to selecting the appropriate contour interval.

Figure 1. Intervals between Live Fascine Contours

Slope	Contour Interval
1:1	3'
1.5:1	3'
2:1	4'
2.5:1	4'
3:1	5'
3.5:1	5'
4:1	6'
6:1	8'

(Credit: *2002 Connecticut Guidelines for Soil Erosion and Sediment Control*)

Installation Requirements

- Prior to placing the fascines, the slope shall be smoothed and graded with obstructions removed. Any structural measures for revetment, drainage, or surface water management will be installed first.
- Fascines shall be 4 inches minimum in diameter.
- Working from the bottom of the slope to the top, excavate the fascine trench. Place fascines in trench. Fascines shall be overlapped 12 inches minimum in the trench (See **Figure 2**)
- Anchor fascines with stakes spaced at 24 inches.
- Cover fascines with soil leaving about 10% exposed to view.
- Soil shall be worked into the fascine and compacted by walking on the fascine being covered.
- All disturbed areas should be seeded upon completion of fascine placement.

Inspection, Maintenance, and Removal Requirements

- Regular inspection and maintenance of fascine installations should be conducted, especially during the first year of establishment.
- Loose stakes should be reset and settled fill areas should be brought back to grade.

- Prompt corrections to gullies, sloughs or other evident problems shall be made.

Figure 2. Live Fascine

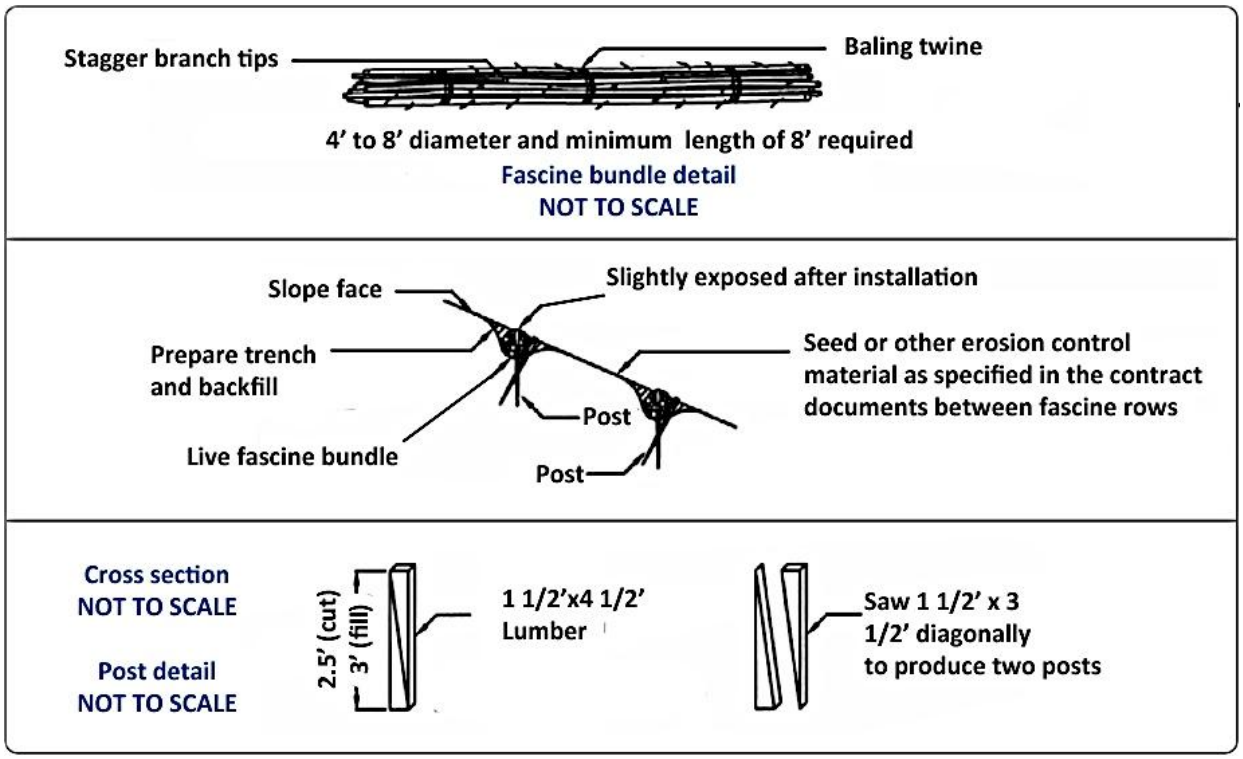

(Credit: *2002 Connecticut Guidelines for Soil Erosion and Sediment Control*)

Fiber Rolls for Bio-Engineering

(Photo Credit: US EPA)

Definition

- A fiber roll is a coconut fiber, straw, or excelsior woven roll encased in netting of jute, nylon, or burlap used to dissipate energy along bodies of water and provide a good medium for the introduction of herbaceous vegetation.

Purpose

- To dissipate energy along waterways;
- To slow, filter, and spread overland flows for slope protection and to help prevent sheet and rill erosion and thus minimizes gully development;
- To help reduce sediment loads to receiving waters by filtering runoff and capturing sediments;
- To provide a good medium for the introduction of herbaceous vegetation.

Applicability

- Streambanks, channels, and bodies of water where shear stress is low and water levels are relatively constant;
- Along the toe, top, face, and at-grade breaks of exposed and erodible slopes to shorten slope length and spread runoff as sheet flow;
- At the end of a downward slope where it transitions to a steeper slope;
- Along the perimeter of a project;
- As check dams in unlined ditches - Avoid using them in channels that are actively incising or in reaches with large debris loads or potential for significant ice buildup;
- Downslope of exposed soil areas;
- Around temporary stockpiles.

Note: Planting in the fiber roll is appropriate where the roll will remain continuously wet.

Note: Artificially controlled streams for hydropower are not good candidates for this technique.

Planning and Design Requirements

Fiber rolls can be installed along with permanent measures for source control and revegetation and along with temporary or permanent mulches (straw mulch, erosion control blankets, hydraulic mulches, or bounded fiber matrices).

Installation Requirements

- The roll is placed in a shallow trench dug below base flow or in a 4 inch trench on the slope contour and anchored by 2” x 2”, 3-foot long posts driven on each side of the roll (see **Figure 1**).
- The roll is contained by either braided nylon or coir fiber rope placed over the roll from post to post. Braided nylon rope (1/8" thick) may be used.
- The anchor posts shall be spaced laterally 4 feet on center on both sides of the roll, staggered, and driven down to the top of the roll.
- Soil is placed behind the roll and planted with suitable herbaceous or woody vegetation. If the roll will be continuously saturated, wetland plants may be planted into voids created in the upper surface of the roll.
- Where water levels may fall below the bottom edge of the roll, a brush layer of willow should be installed so as to lay across the top edge of the roll.

Inspection, Maintenance, and Removal Requirements

- Due to the susceptibility of plant materials to the physical constraints of the site, climate conditions, and animal populations, it is necessary to inspect installations frequently. This is especially important during the first year or two of establishment.
- Plant materials missing or damaged should be replaced as soon as possible. Sloughs or breaks in drainage pattern should be reestablished for the site as quickly as possible to maintain stability.

Figure 1. Fiber Roll

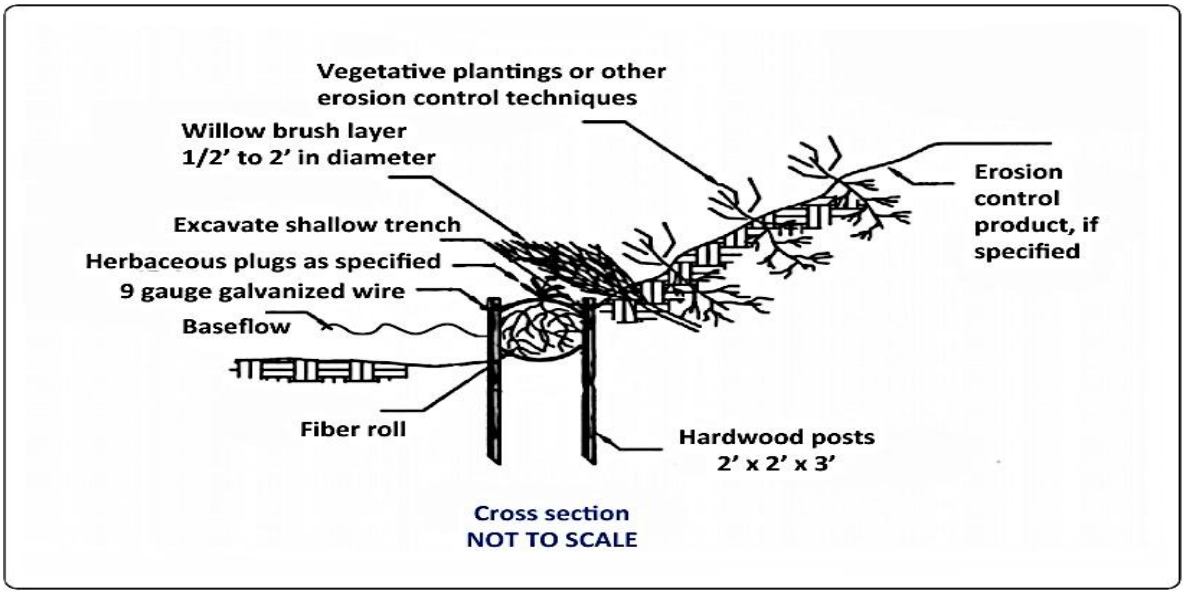

(Credit: *2002 Connecticut Guidelines for Soil Erosion and Sediment Control*)

Live Crib Walls

(Photo Credit:US EPA)

Definition

- A combination of structural elements and vegetation. The structure is a hollow box-like structure made with an interlocking arrangement of untreated logs or timber members spiked together and anchored into the slope, and filled with suitable earth fill materials. The vegetation is usually layers of live branch cuttings which root inside the structure and extend into the slope.

Purpose

- To protect exposed or eroded streambanks from the erosive forces of flowing water and stabilize the toe of slope;
- To reduce steepness and provide stability where space is limited and a vertical structure is needed.

Applicability

- Generally applicable where flows are less than 6 feet per second and no degradation of the streambed occurs.

Note: It is not intended to be used where the integrity of a road or structure is dependent on the cribwall since it is not designed to resist large lateral earth pressures.

Planning and Design Requirements

- The vegetated cribwall structure shall be designed to a height for its intended purpose.
- Live branch cuttings should be 1/2 to 2 inches in diameter and long enough to reach from the front of the structure to the undisturbed soil.
- The structure will be built with a batter (the slope of the front face of the crib) of 1 to 12.
- Large spikes or rebar (10 inches minimum length) are required to secure the logs or

timbers together.

- Only untreated logs or timber shall be used in the cribwall.
- Plant materials shall be a native or nursery grown cultivar that is capable of performing the intended function. Selection of materials used for live crib wall should be identified for appropriateness and availability prior to start of construction. Consult with local plant specialist, landscape architects or URI for plant selection.

Installation Requirements

See **Figure 1** for installation details.

- Installation begins with excavating to a stable foundation 2' - 3' below the ground elevation at the toe of slope with the back of the excavation (to the slope) slightly deeper than the front.
- The first course of logs is placed along the front and back of the excavated foundation approximately 4-5 feet apart and parallel to the slope contour.
- The next course is placed at right angles on top of the previous course to overhang the front and back of the previous logs by 3-6 inches.
- Each course is placed in the same manner and fastened to the preceding course to the desired grade.
- Stone fill is placed in the bottom of the structure up to the ground level and up to the base flow in a stream channel.
- Once the cribwall structure reaches the existing ground elevation, live branch cuttings are placed on the stone fill parallel with the slope contour.
- The cuttings are then covered with select clean fill with a maximum coarse fragment size of 3 inches and not more than 20 percent passing a 200 mm sieve size. When possible use native soil materials that meet the topsoil definitions or use amended soil.
- The live branch cuttings shall be placed at each course followed by the select fill to the top of the structure with the growing tips slightly protruding from the cribwall face.
- Sloughs or breaks in drainage pattern should be reestablished for the site as quickly as possible to maintain stability.

Inspection, Maintenance, and Removal Requirements

- The plant materials shall be kept in a healthy growing condition by watering.
- Due to the susceptibility of plant materials to the physical constraints of the site, climate conditions, and animal populations, it is necessary to inspect installations frequently. This is especially important during the first year or two of establishment.
- Plant materials missing or damaged should be replaced as soon as possible.

Figure 1. Live Crib Wall

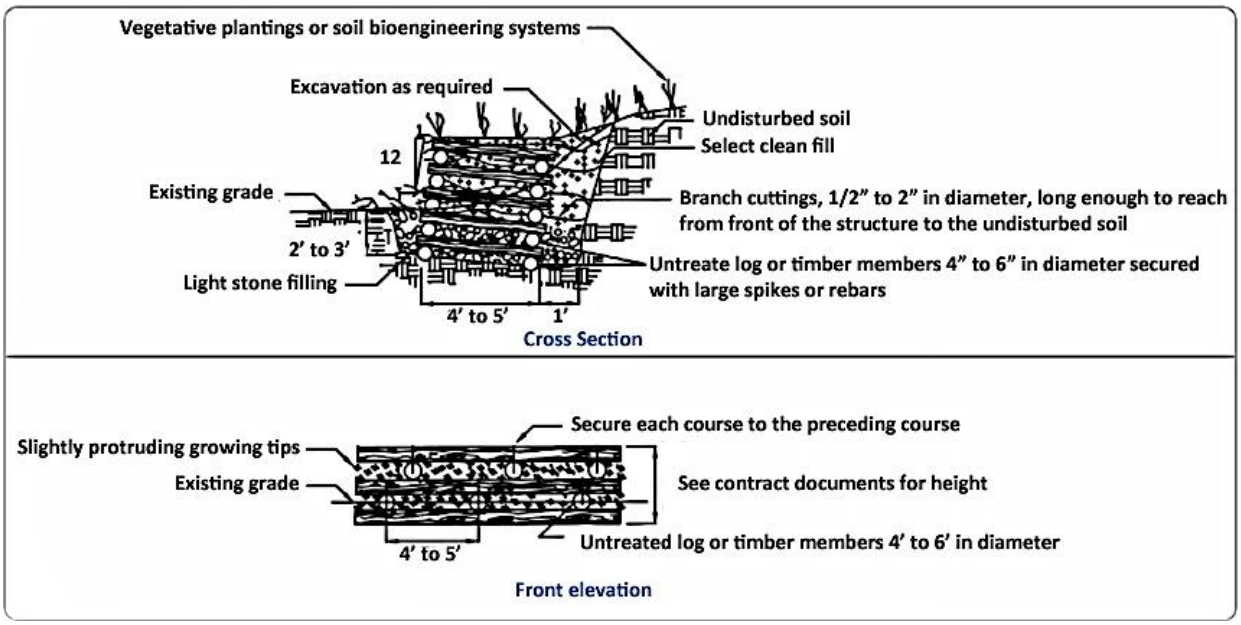

(Credit: *2002 Connecticut Guidelines for Soil Erosion and Sediment Control*)

Live Staking

(Photo Credit: US EPA)

Definition

- A stake or pole fashioned from live woody material (usually willow or poplar cuttings) that root easily and grow rapidly under certain conditions.

Purpose

- To create a living root mat that stabilizes the soil by reinforcing and binding soil particles together and by contributing to the reduction of excess soil moisture.

Applicability

- For the repair of small earth slips and slumps that are frequently wet;
- For the repair of raw streambanks;
- For relatively uncomplicated sites when construction time is limited and an inexpensive vegetative method of stabilization is desired.

Note: It is not intended to be used where structural integrity is required or where large lateral earth pressures must be resisted.

Planning and Design Requirements

- Live stakes shall be ½ to 4 inches in diameter and 1-6 feet long, depending on site application.
- Live stakes must be cut to a point on the basal end for ease of insertion.
- Materials shall be a native or nursery grown cultivar that is capable of performing the

intended function. Selection of materials used for live staking should be identified for appropriateness and availability prior to start of construction. Consult with local plant specialist, landscape architects or URI for plant selection.

- No leaf buds shall have initiated growth beyond ¼ inch.
- The cambium layer shall be moist, green and healthy.
- All material shall be maintained in a continuously cool, covered, and moist state prior to use and be in good condition when installed.
- Materials harvested on site shall be installed the same day they are prepared.
- Nursery grown material shall be maintained in a moist condition until installed.

Installation Requirements

See **Figure 1** for installation details.

- The lengths of live cuttings/live stakes depends upon the application. If through riprap, the length shall extend through the surface of the stone fill. At least half the length shall be inserted into the soil, below the stone fill.
- A minimum 2-4 inches and two live buds of the live stake shall be exposed above the stone filling.
- Care shall be taken to not damage the live cuttings during installation. Use a dead blow hammer to drive stakes into the ground. The hammerhead should be filled with shot or sand.
- A dibble, iron bar, or similar tool shall be used to make a pilot hole to prevent damaging the material during installation.
- Live cuttings shall be inserted by hand into pilot holes.
- When possible, tamp soil around live stakes.
- Care shall be taken not to damage the live stakes during installation. Those damaged at the top during installation shall be trimmed back to undamaged condition and supplemented with an intact live stake.
- Sloughs or breaks in drainage pattern should be reestablished for the site as quickly as possible to maintain stability.

Inspection, Maintenance, and Removal Requirements

- Due to the susceptibility of plant materials to the physical constraints of the site, climate conditions, and animal populations, it is necessary to inspect installations frequently. This is especially important during the first year or two of establishment.
- Plant materials missing or damaged should be replaced as soon as possible.

Figure 1. Live Staking

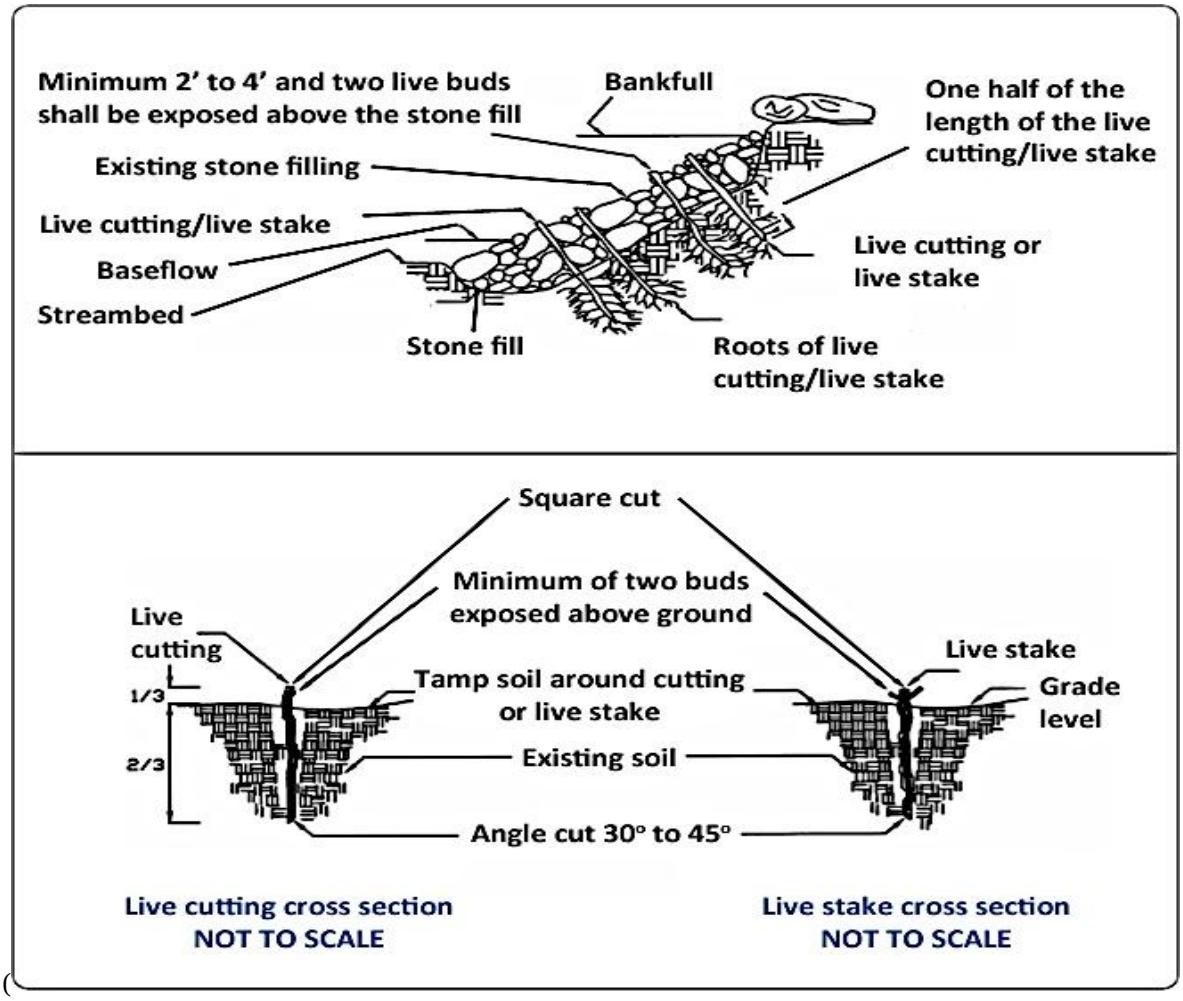

(Credit: *2002 Connecticut Guidelines for Soil Erosion and Sediment Control*)

Tree Revetments

(Photo Credit: US EPA)

Definition

- A tree revetment consists of tree trunks and branches (without the root wad) overlapped and anchored to the earth with cables or earth anchors.

Purpose

- To stabilize banks by absorbing energy, reducing velocity, capturing sediment, and enhancing conditions for colonization of native species.

Applicability

- For bank stabilization in areas that are eroded or undercut;
- Not to be used near bridges or other structures where there is a potential for downstream damage if a revetment dislodges;
- Not to be used in streams that are flashy or in need of heavy maintenance.

Planning and Design Requirements

- Trees shall be sound, recently felled (recommend spruce or fir trees) of 6" or greater diameter and at least 20 feet in length.
- Each tree shall have its branches trimmed off on the bank side.

Installation Requirements

See **Figure 1** for installation details.

- Trees are placed initially at the base flow elevation with the butt end upstream. Multiple tree revetments shall be overlapped by 25% of their length, working from downstream to upstream.
- Each tree shall have its branches trimmed off on the bank side and have two anchors, one near the butt end and the other at 3/4 distance up the trunk.

- The tree shall be fastened with galvanized cable to the anchors, which will be commercially manufactured earth anchoring systems. The butt end cable shall also be attached to the stem of the next tree at 3/4 the distance from the base, as it is placed to the outside of the previous tree.
- Excavate and backfill as necessary to fit the tree revetment to the site.
- Sloughs or breaks in drainage pattern should be reestablished for the site as quickly as possible to maintain stability.

Inspection, Maintenance, and Removal Requirements

- Due to the susceptibility of materials to the physical stresses of the site, it is necessary to inspect installations frequently. This is especially important during the first year or two of establishment.
- Materials missing or damaged should be replaced as soon as possible.

Figure 1. Tree Revetment

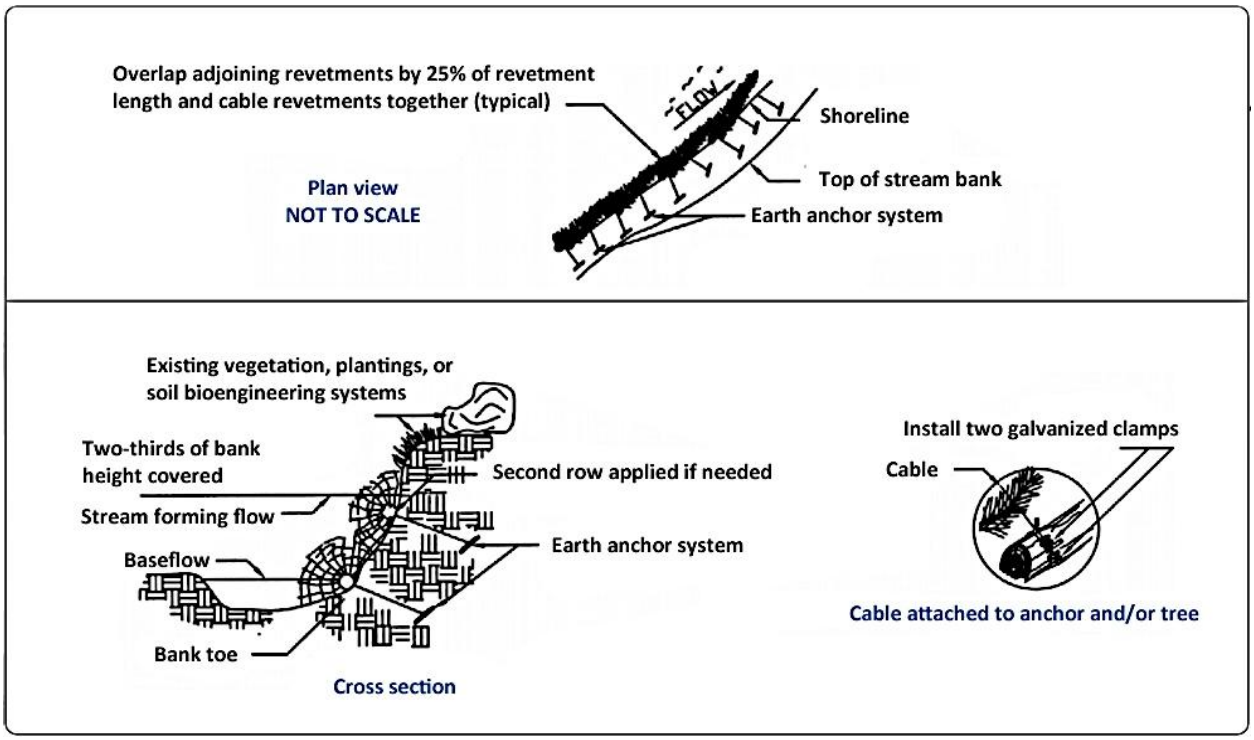

(Credit: *2002 Connecticut Guidelines for Soil Erosion and Sediment Control*)

SECTION FIVE:
RUNOFF CONTROL MEASURES

(Photo Credit: USDA, NRCS)

CHECK DAMS ..... (1 - 9)
WATER BARS ..... (1 - 3)
DIVERSIONS ..... (1 - 4)
PERIMETER DIKES ..... (1 - 3)
LINED WATERWAYS ..... (1 - 8)
VEGETATED WATERWAYS ..... (1 - 4)
TEMPORARY LINED CHANNEL ..... (1 - 3)
PIPE SLOPE DRAINS ..... (1 - 3)
GRADE STABILIZATION STRUCTURES ..... (1 - 3)
OUTLET PROTECTION ..... (1 - 11)

Check Dams

(Photo Credit: MACC ESC Guide)

Definition

- Small, normally temporary dams constructed across a waterway or other watercourse.
- Check dams can be constructed of stone, logs or fiber roll.
- Check dams can be permanent or temporary. “Temporary" means that the structure will be in place only as long as needed but shall be removed after upgradient areas are stabilized.

Purpose

- To trap small amounts of sediment generated in the ditch itself.
- To temporarily pond storm water runoff to allow sediments to settle out.
- To reduce velocities of water in the channel.

Applicability

- Where concentrated flows are expected to cause erosion.
- Temporary drainage ways which, because of their short length of service, will not receive a non-erodible lining but still need protection to reduce erosion.
- Permanent ditches or swales which need protection prior to their stabilization.
- Permanent ditches or swales that will receive significant sediment loads during construction.

Note: Only stone check dams should be considered for permanent applications.

Note: This measure is limited to use in small open channels.

Note: This measure is not a sediment trapping measure and should not be used as substitute for a **Temporary Sediment Trap,** or a **Temporary Sediment Basin,** however, stone check dams may be used in conjunction with those measures.

Note: Not for installation in a natural watercourse.

Planning and Design Requirements

Critical Minimum Standards

Check dams must be placed close enough to one another such that the pool of water behind each check dam extends to the next upstream check dam (**Figure 1**). That is, the crest elevation of a downstream check dam must be at or above the base elevation of the next check dam. This will result in water draining directly from pool to pool in order to reduce velocities.

Figure 1. Calculating the Spacing between Check Dams

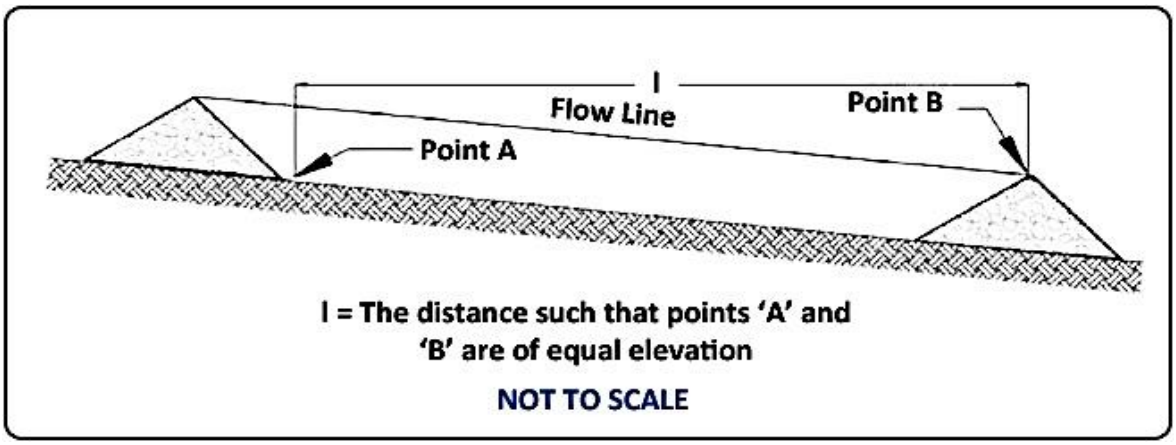

(Credit: *2002 Connecticut Guidelines for Soil Erosion and Sediment Control*)

- Check dams are considered to be temporary if it is used only during construction and for a period of less than 6 months. It is considered to be permanent if it is used after construction or for more than 6 months. Its length of use and the size of the watershed determine if an engineered design is required (see **Figure 2**). When planning the location of the stone check dam(s) consider the tailwater effects, duration of ponding, stone size, the contributing watershed. Also assess if the final use of the area will require the stone check dam(s) to be removed. Give consideration to mowing requirements and aesthetics.
- Check dams should never be placed in natural waterways.

Figure 2. Design Requirements

Design Requirements	Drainage Area	Length of Use
no engineered design	≤ 2 acres	<6 months
2-yr frequency storm	>2 acres	>6 months, <1 year
25-yr frequency storm	any drainage size	>1 year

(Credit: *2002 Connecticut Guidelines for Soil Erosion and Sediment Control*)

Small or Temporary (< 6 Months) Check Dam Design Criteria

No formal design is required for a check dam if the contributing drainage area is 2 acres or less and its intended use is shorter than 6 months; however, the following criteria should be adhered to when specifying check dams.

- The drainage area of the ditch or swale being protected should not exceed 10 acres.
- The maximum height of the check dam should be 2 feet.
- The center of the check dam must be at least 6 inches lower than the outer edges (see **Figure 3**).
- The maximum spacing between the dams should be such that the toe at the upstream dam is at the same elevation as the top of the downstream dam.

Figure 3. Stone Check Dams with Center Lower than Edges

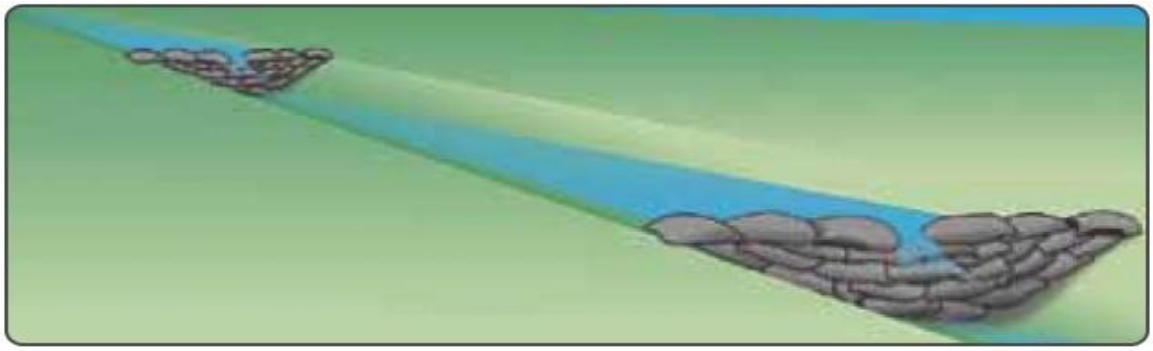

(Credit: MACC ESC Guide)

Larger or More Permanent (> 6 Months) Check Dam Design Criteria

- If the contributing drainage area is greater than 2 acres or its intended use is longer than 6 months, design the stone check dam according to generally accepted engineering standards For use of a stone check dam less than 1 year, design the stone check dam to

safely pass the peak flow expected from a 2-year frequency storm without structural failure and adverse tailwater effects.

- For use of a stone check dam exceeding 1 year, design the stone check dam to safely pass the peak flow expected from the design flow of the drainage feature without structural failure of the check dam and adverse tailwater effects.
- Stone: Size shall at a minimum meet the requirements of DOT Standard Specifications Section M.01.09, Table 1, Gradation II as provided in **Figure 4**.

Figure 4. Stone Size Requirements

Sieve Size	Gradation - % Passing
2 1/4"	100
2"	90-100
1 1/2'	30-55
1 1/4"	0-25
1"	0-5

(Credit: *2002 Connecticut Guidelines for Soil Erosion and Sediment Control*)

- Stone shall be appropriately sized to manage the design storm flow without failure. The stone shall be sound, tough, durable, angular, not subject to disintegration on exposure to water or weathering, be chemically stable, and shall be suitable in all other respects for the purpose intended. Larger stone can be used on the outside of the check dam in order to stabilize it during larger flows.

Installation Requirements

Types of Check Dams

Stone Check Dams

Hand or mechanical placement will be necessary to achieve complete coverage of the ditch or swale and to ensure that the center of the dam is lower than the edges. A geotextile shall be placed below permanent check dams and keyed into the upstream and downstream channel bottom and sides at a depth of at least 6 inches.

Log Check Dams

Logs shall be in good condition and recently cut with no visible rot. Whole logs shall extend across the channel. Logs shall be anchored to the bottom of the channel and channel sides as appropriate to retain desired depth of ponding.

Fiber Roll Check Dams

Fiber rolls should be placed in a single row, lengthwise, oriented perpendicular to the flow lines of the channel, with ends of adjacent rolls tightly abutting one another. Rolls shall be secured in a

manner that is consistent with manufacturer's recommendations for this application so that the rolls are not washed downstream.

Types of Applications

In General

Place the stone by hand or machine, making side slopes no steeper than 1:1 (i.e., the angle of repose) with a maximum height of 3 feet at the center of the check dam. A geotextile shall be used in permanent installations under the stone to provide a stable foundation and to facilitate removal of the stone.

In Drainageways

Shall not exceed 3 feet in height at the center. Extend the stone check dam to the full width of the drainageway, plus 18 inches on each side leaving the height of the center of the stone check dam approximately 6 inches lower than the height of the outer edges (see **Figure 30-5**).

The maximum spacing between check dams shall be such that the toe of the upstream check dam is at the same elevation as the top of the center of the downstream check dam.

Figure 5. Stone Check Dam Installation in Drainageways

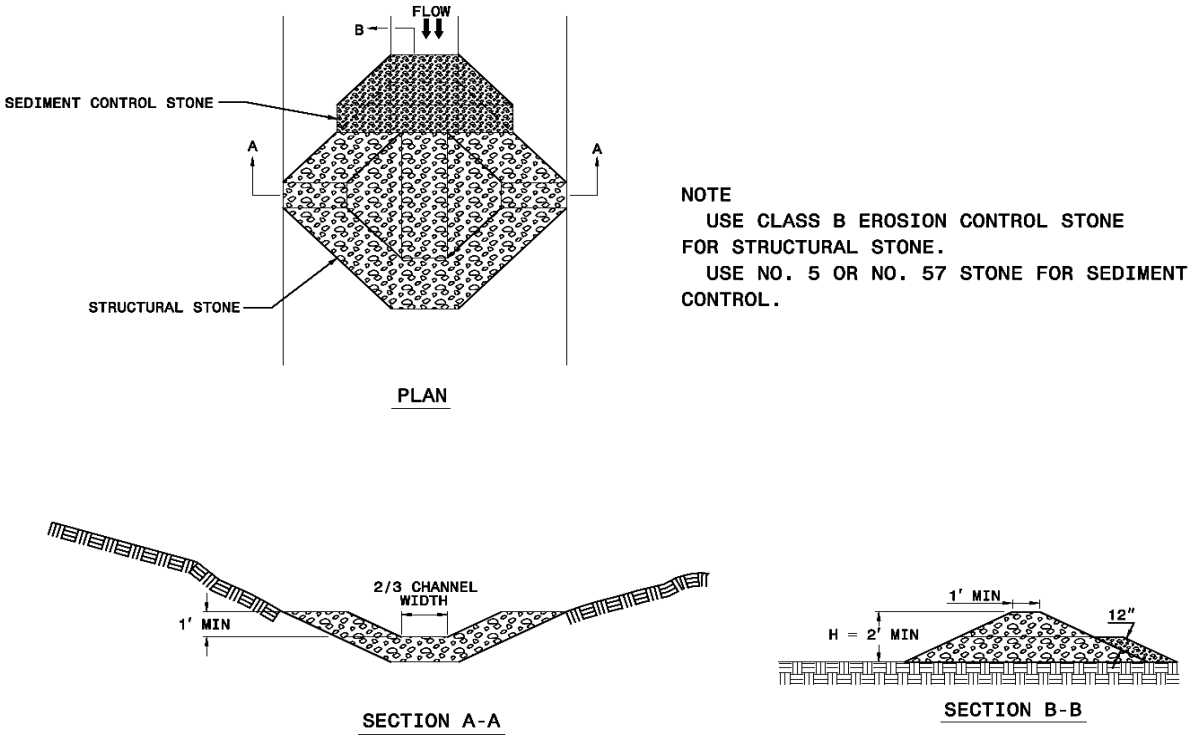

(Credit: USDA, NRCS)

Figure 6. Special Case Combination Stone Check Dam

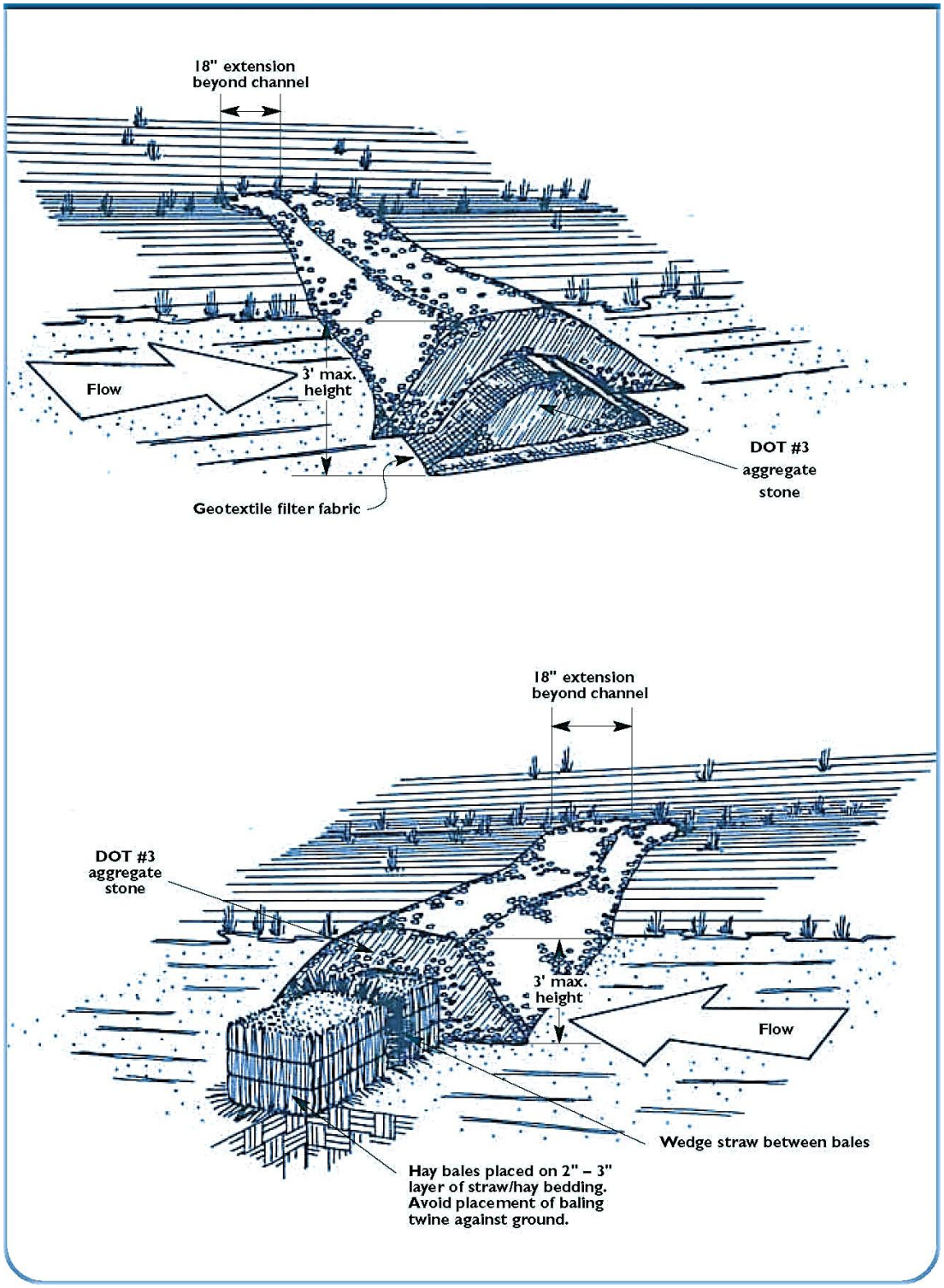

(Credit: *2002 Connecticut Guidelines for Soil Erosion and Sediment Control*)

Catch Basins in Drainageways

Where catch basins in drainageways are located on slopes or at culvert inlets, locate the check dam across the drainageway no farther than 6 feet above the catch basin or culvert.

Catch Basins in Depressions or Low Spots (Yard Drains)

Encircle the entire catch basin with a stone check dam not to exceed 18 inches in height and 3 feet out from the outside edge of the top of the frame**.**

Culvert Inlets

Locate the stone check dam approximately 6 feet from the culvert in the direction of the incoming flow.

Special Case Combinations for Added Filtration & Frozen Ground Conditions

These are non-engineered stone check dams modified for use in critical watersheds (e.g. public water supply, cold water fisheries) when the drainage area is 2 acres or less or when a sediment barrier needs to be installed during frozen ground conditions.

- Stone Check Dam/Geotextile: Stone check dams that are installed with an internal core of geotextile. The geotextile encourages ponding and filtration while the stone check dam provides stability. The geotextile must meet the minimum standards set forth in **Silt Fence, Straw Wattles, Compost Tubes and Fiber Rolls.** Partially construct the stone check dam to at least half its height. Place the geotextile over the partially built dam with sufficient material on the upstream side to allow for it to make complete contact with the ground. Complete the placement of stone by burying the geotextile within the check dam. Useful life of the measure is limited by the life of the geotextile used and maintenance.
- Stone Check Dam/Fiber Roll: Stone check dams that are installed with a core of fiber rolls. The fiber rolls provide filtering capacity while the stone check dam provides stability. Place fiber rolls with the ends of adjacent rolls tightly abutting one another. Bury fiber rolls with stone and complete the construction of the stone check dam as indicated in the Application paragraphs above. Useful life of the measure is limited by the life of the fiber rolls and maintenance.

Inspection and Maintenance Requirements

General

- Temporary check dams shall be maintained in proper working condition by the contractor as long as the structure is in place. For temporary check dams, inspect stone check dams at least once a week and within 24 hours of the end of a storm with a rainfall amount of 0.5 inch or greater to determine maintenance needs.
- For permanent stone check dams, inspect and maintain the stone check dam in accordance with the standards and specifications provided in the design.
- Replace or repair the check dam within 24 hours of observed failure. Failure of the check dam has occurred when sediment fails to be retained because:
  - stone has moved,
  - soil has eroded around or under the check dam reducing its functional capacity, or
  - trapped sediments are greater than one-half of the height of the check dam.
- When repetitive failures occur at the same location, review conditions and limitations for use and determine if additional controls (e.g. temporary stabilization of contributing area, diversions, stone check dams) are needed to reduce failure rate.
- Maintain the stone check dam until the contributing area is stabilized. After the

contributing area is stabilized, remove accumulated sediment.

Sediment Removal

Sediment will accumulate behind the check dams. Sediment should be removed from behind the check dams when it has accumulated to one-half of the original height of the dam. Trapping efficiencies at check dams are significantly reduced if accumulated sediment is not removed.

Check Dam Removal

Check dams must be removed when their useful life has been completed. In temporary ditches and swales, check dams should be removed and the ditch filled in when it is no longer needed. In permanent ditches, check dams should be removed when a permanent lining can be installed. Permanent check dams are intended to be in place through the useful life of the drainage feature it is protecting.

Temporary check dams may be removed or graded into the flow line of the channel over the area left disturbed by sediment removal. Grade so there are no obstructions to water flow. If stone check dams are used in grass-lined channels which will be mowed, remove all the stone or carefully grade out the stone to ensure it does not interfere with mowing. This should include any stone which has washed downstream.

Stabilize any disturbed soil that remains from check dam removal operations. The area beneath the check dams should be seeded and mulched immediately after they are removed.

Water Bars

(Photo Credit: PA DEP**)**

Definition

- A ridge or ridge and channel constructed diagonally across a sloping road or utility right-of-way that is subject to erosion.

Purpose

- To minimize the concentration of sheet flow across and down sloping roadways and access ways, or similar sloping and unstable areas.
- To shorten the continuous flow length within a sloping right-of-way.
- To limit the accumulation of erosive velocity of water by diverting surface runoff at pre-designed intervals.

Applicability

- Where runoff protection is needed to prevent erosion on sloping access right-of-ways or either long, narrow sloping areas generally less than 100 feet in width.

Planning and Design Requirements

- The drainage area to each separate water bar shall be less than one (1) acre.
- The design height shall be minimum of 12” and a maximum of 18” measured from channel bottom to ridge top (**Figure 1**).
- The side slopes shall be 2:1 or flatter, a minimum of 4:1 where vehicles cross.
- The base width of the ridge shall be six feet minimum.
- The spacing of the water bars shall be as shown in **Figure 2**.
- The positive grade of the water bar shall not exceed 2%. A crossing angle of approximately 60 degrees is preferred.

- Once diverted, water must be conveyed to a stabilized outlet, sediment-trapping device such as are described in Temporary Sediment Traps; Measure Temporary Sediment Basins; and, Water Conveyance measures.

Figure 1. Water Bar Cross-Sectional Dimensions

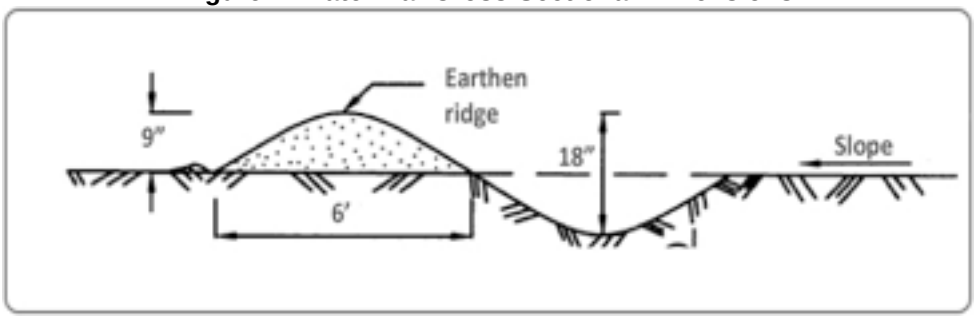

(Credit: *2002 Connecticut Guidelines for Soil Erosion and Sediment Control*)

Figure 2. Spacing of Water Bars Based on Slope

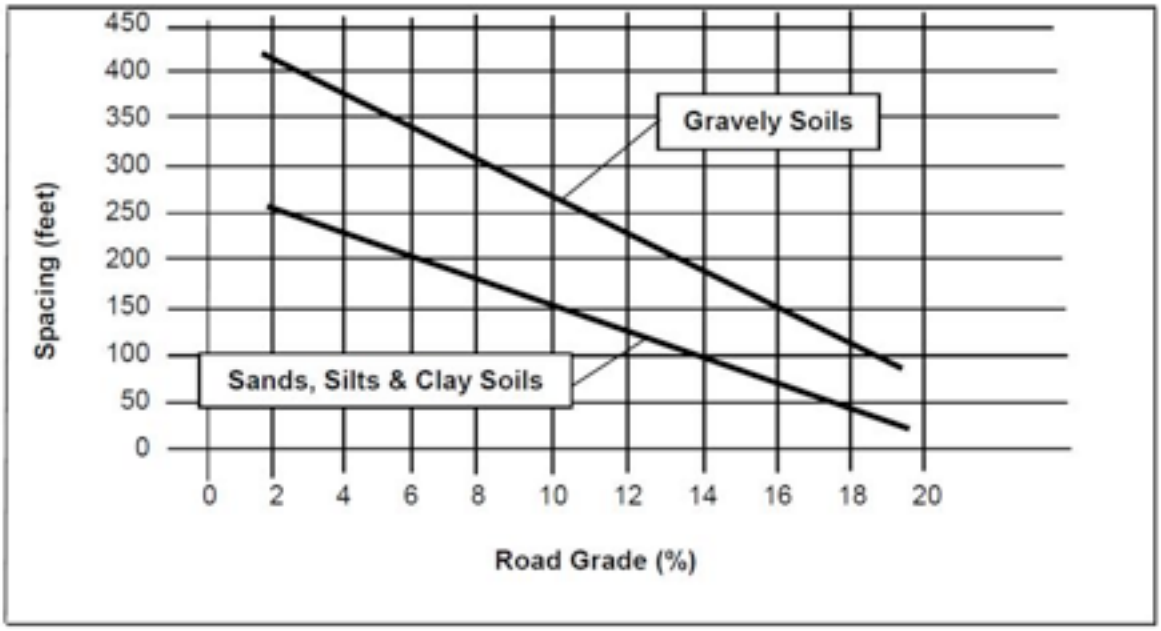

(Credit: 2002 Connecticut Guidelines for Soil Erosion and Sediment Control)

Installation Requirements

- Install the water bar as soon as the access way or roadway has been cleared and/or graded (see **Figure 3**).
- Tamp or compact all earthen berm portions of the water bar.
- When slopes vary between water bars, space the water bars using the maximum spacing given for the steepest gradient found between the water bars.
- Adjust the field location of the outlet as needed to utilize a stabilized outlet area, without

violating the spacing restrictions.

- Site spacing may need to be adjusted for field conditions to use the most suitable areas for water disposal.
- Vehicle crossing shall be stabilized with gravel. Exposed areas shall be immediately seeded and mulched.

Inspection, Maintenance, and Removal Requirements

- For water bars receiving drainage from disturbed areas, inspect and perform any repair work at the end of each day that the water bar is exposed to vehicular traffic and within 24-hours of the end of a rainfall amount of 0.25-inch or greater.
- For water bars receiving drainage from stable areas, inspect and perform any repair work at the end of each day the water bar is exposed to vehicular traffic or annually, whichever comes first.
- Immediately reshape and repair any observed damage to the water bar.
- If sediment deposits reach approximately one-half the height of the water bar, remove the accumulated sediments.
- When water bars have served their usefulness, they may be removed.

Figure 3. Water Bar Details

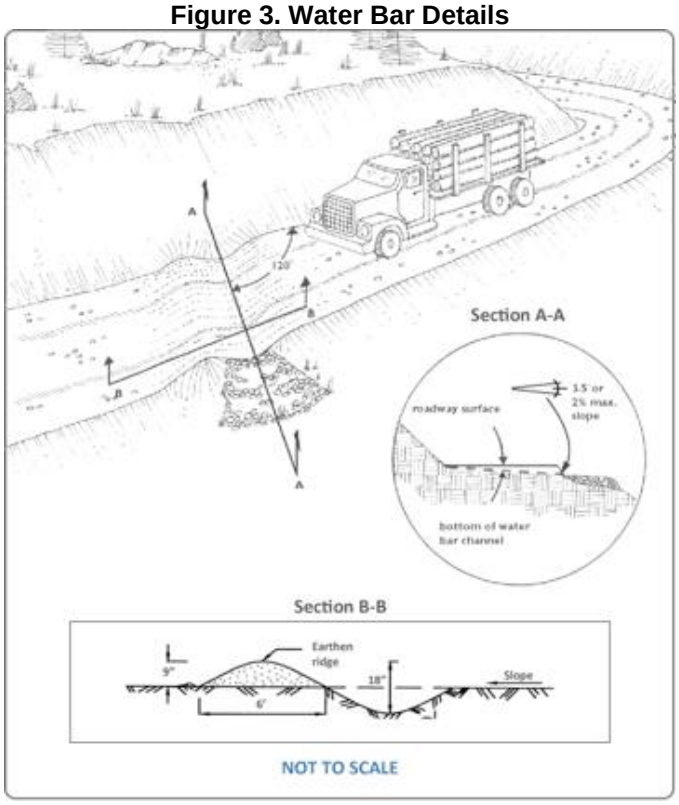

(Credit: *2002 Connecticut Guidelines for Soil Erosion and Sediment Control*)

Diversions

(Photo Credit: NRCS)

Definition

- A drainage way of parabolic or trapezoidal cross-section with a supporting ridge on the lower side that is constructed across a slope.

Purpose

- To intercept and convey runoff to stable outlets at non-erosive velocities.

Applicability

- For drainage areas 2-acres or larger. See **Perimeter Dikes** for drainage areas less than 2 acres.
- Where runoff from higher areas has potential for damaging properties, causing erosion, or interfering with, or preventing the establishment of, vegetation on lower areas.
- Where surface and/or shallow subsurface flow is damaging sloping upland.
- Where the length of slopes needs to be reduced so that soil loss will be kept to a minimum.
- Not for slopes greater than 15%.
- Not applicable below high sediment producing areas unless land treatment measures or structural measures, designed to prevent damaging accumulations of sediment in the channels, are installed with, or before, the diversions.

Note: Diversions are only applicable below stabilized or protected areas.
Note: Diversions should be used with caution on soils subject to slippage.

Planning and Design Requirements

Location

Diversion location shall be determined by considering outlet conditions, topography, land use, soil type, length of slope, seep planes (when seepage is a problem), and the development layout.

Capacity

- TR-55, Urban Hydrology for Small Watersheds, or other appropriate methods shall compute peak rates of runoff values used in determining the capacity requirements.
- The constructed diversion shall have the capacity to carry, as a minimum, the peak discharge from a ten year, 24 hour frequency rainfall event with freeboard of not less than 0.3 feet.
- Diversions designed to protect homes, schools, industrial buildings, roads, parking lots, and comparable high-risk areas, and those designed to function in connection with other structures, shall have sufficient capacity to carry peak runoff expected from a storm frequency consistent with the hazard involved.

Cross Section

- The diversion channel shall be parabolic or trapezoidal in shape and shall be designed in accordance with **Lined Waterways** and **Vegetated Waterways.**
- The diversion shall be designed to have stable side slopes not steeper than 2:1.
- The diversion shall be flat enough to ensure ease of maintenance of the diversion and its protective cover.
- The ridge shall have a minimum width of four feet at the design water elevation; a minimum of 0.3 feet freeboard and a reasonable settlement factor shall be provided.

Velocity and Grade

- The permissible velocity for the specified method of stabilization will determine the maximum grade.
- Maximum permissible velocities of flow for the stated conditions of stabilization shall be as determined in **Lined Waterways** and **Vegetated Waterways.**

Outlets

- Each diversion must have an adequate outlet.
- The outlet may be a grassed waterway, vegetated or paved area, grade stabilization structure, stable watercourse, or subsurface drain outlet.
- In all cases, the outlet must convey runoff to a point where outflow will not cause damage.
- Vegetated outlets, if needed, shall be installed before diversion construction to ensure establishment of vegetative cover in the outlet channel.
- The design elevation of the water surface in the diversion shall not be lower than the design elevation of the water surface in the outlet at their junction when both are operating at design flow.

Installation Requirements

- Diversions shall be installed and stabilized as follows (See also **Figure 1**).
- All trees, brush, stumps, obstructions, and other objectionable material shall be removed and disposed of so as not to interfere with the proper functioning of the diversion.
- The diversion shall be excavated or shaped to line, grade, and cross-section as required to meet the criteria specified herein and be free of bank projections or other irregularities with will impede normal flow.
- Fills shall be compacted as needed to prevent unequal settlement that would cause damage in the complete diversion.
- All earth removed and not needed in construction shall be spread or disposed of so that it will not interfere with the functioning of the diversion.
- Stabilization shall be done according to the appropriate standard and specifications for vegetative measures.
    - For design velocities of less than 3.5 ft/sec., seeding and mulching may be used for the establishment of the vegetation. It is recommended that when conditions permit, temporary diversions or other means be used to prevent water from entering the diversion during the establishment of vegetation.
    - For design velocities of more than 3.5 ft/sec., the diversion shall be stabilized with sod, with seeding protected by jute or excelsior matting, or with seeding and mulching including temporary diversion of the water until the vegetation is established.
    - For design velocities of more than 3.5 ft/sec., a permanent stone lined waterway is also acceptable. Design pursuant to **Lined Waterways** and **Vegetated Waterways.**

Figure 1. Diversion

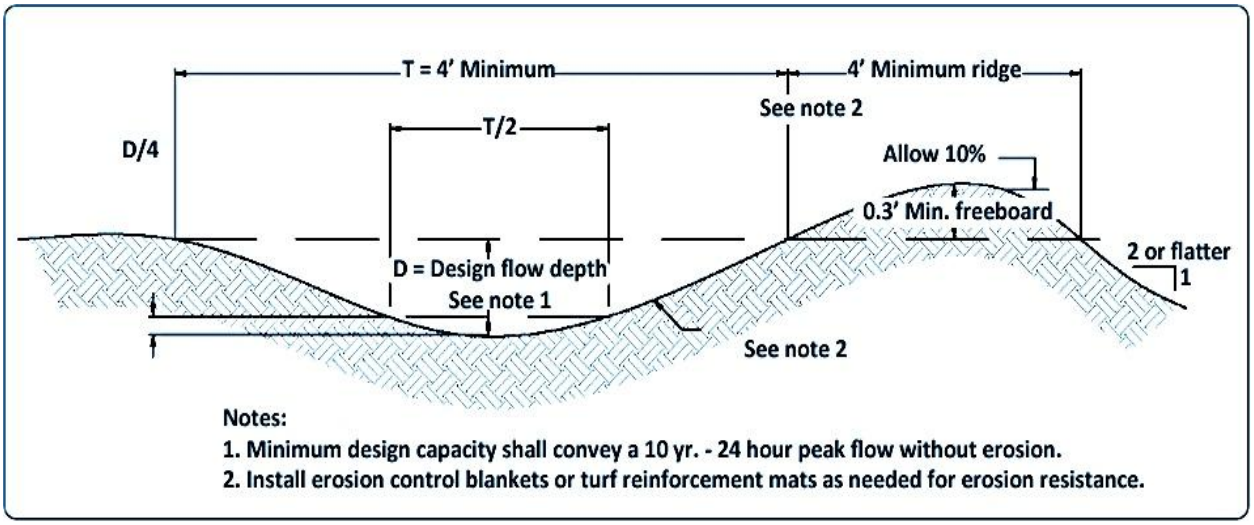

(Credit: *2002 Connecticut Guidelines for Soil Erosion and Sediment Control*)

Inspection, Maintenance, and Removal Requirements

- Inspect the diversion at least once a week and within 24 hours of the end of a storm with a rainfall amount of 0.25-inches or greater during construction or until the diversion is completely stabilized. Check for seed and/or mulch movement and/or rill erosion. Mow as required for vegetated diversions. Remove sediment and repair damage to diversions immediately.
- After construction is complete and the diversion is completely stabilized, inspect the diversion annually and after each major rainfall for damage and deterioration. Repair damages immediately. Ongoing maintenance shall include the removal of accumulated sediment and debris from the channel and mowing as required.

Perimeter Dikes

(Photo Credit: Chuck Eaton, CME Engineering)

Definition

- A temporary ridge of soil excavated from an adjoining swale located along the perimeter of the site or disturbed area.

Purpose

- To prevent off-site stormwater from entering a disturbed area.
- To prevent sediment laden storm runoff from leaving a disturbed area.
- To channel water to a sediment trapping device, thereby reducing the potential for erosion and off site sedimentation.

Applicability

- Along tops of slopes (to prevent flows from eroding the slope) of areas draining less than 2 acres.
- Along base of slopes (to direct sediment laden flows to a trapping device) of sites draining less than 2 acres.

Note: For drainage areas 2 acres or larger, see **Diversions.**

Planning and Design Requirements

General Considerations

- **Location**: The perimeter dike/swale shall not be constructed outside the property lines without obtaining legal easements from affected adjacent property owners.
- **Height**: 18 inches minimum from bottom of swale to top of dike, evenly divided between dike height and swale depth (See **Figure 33-1**).
- Bottom width of dike: 2 feet minimum.
- **Width of swale**: 2 feet minimum.
- **Grade**: Dependent upon topography, but shall have positive drainage (sufficient grade to

drain) to an adequate outlet. Maximum allowable grade not to exceed 8%.

- **Stabilization**: The disturbed area of the dike/swale shall be stabilized within 7-days of installation.

Large Drainage Areas

For drainage areas larger than 10 acres, refer to **Diversions.**

Figure 1. Perimeter Dike Details

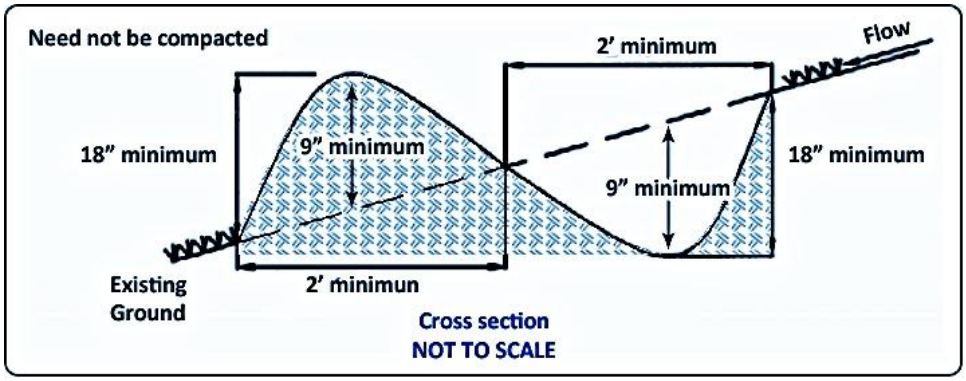

(Credit: *2002 Connecticut Guidelines for Soil Erosion and Sediment Control*)

Outlet

- Perimeter dike/swale shall have a stabilized outlet.
- Diverted runoff from a protected or stabilized upland area shall outlet directly onto an undisturbed stabilized area with a grade of 2% or less. Outlets directed to areas steeper than 2% shall be stabilized with measures as described in **Outlet Protection**.
- Diverted runoff from a disturbed or exposed upland area shall be conveyed to a sediment trapping device such as a **Temporary Sediment**, **Temporary Sediment Basin**, or to an area protected by any of these measures.
- The on-site location may need to be adjusted to meet field conditions in order to utilize the most suitable outlet.

Installation Requirements

The disturbed area of the dike and swale shall be stabilized within 7 days of installation, in accordance with the standards and specifications in **Figure 2.** Seed and mulch only if stabilization can take place within the current growing season.

Figure 2. Stabilization Options Based on Grade

Channel Grade	Stabilization Option
0.5-5.0%	Seed and straw mulch
5.1%-8.0%	Seed and cover with RECP, sod, or line with plastic or 2 inch stone.

(Credit: *2002 Connecticut Guidelines for Soil Erosion and Sediment Control*)

Inspection, Maintenance, and Removal Requirements

- Periodic inspection and required maintenance shall be provided at the end of each work day and after each rain event. Repair as needed.
- Construction traffic should not be permitted to cross the perimeter dike/swale.
- The perimeter dike/swale shall remain in place until the disturbed areas are permanently stabilized.

Lined Waterways

(Photo Credit: MD Department of the Environment)

Definition

- A waterway, which may include chutes and flumes, with an erosion resistant lining composed of turf reinforcement mat, riprap, gabions, or other appropriate durable material.

Purpose

- To safely convey concentrated storm water runoff down the slope by use of a lined chute, flume or waterway.
- To provide for the safe non-erosive conveyance of concentrated surface water runoff to an appropriate receiving channel, without damage by erosion or flooding.

Applicability

- Typically where the contributing drainage area does not exceed 200 acres.
- Where vegetative stabilization is inadequate because the velocity of concentrated runoff is of such magnitude that a lining is needed to prevent erosion of the channel and/or where excessive grades, channel wetness, prolonged base flow, seepage, or soil piping would cause erosion.
- Where vegetative slopes will not prevent erosion caused by people, animals, or vehicles.
- Where property values or adjacent facilities warrant additional protection.
- Not for use within natural stream corridors.

Note: This measure should be planned and installed along with, or as part of, other conservation measures in an overall surface water conveyance system. These systems should be designed by a professional engineer.

Planning and Design Requirements

The Permanent Lined Waterway is used when the limitations of the **Vegetated Waterway and Temporary Lined Channel** are exceeded. However, its application is also limited to a maximum design discharge of 200 acres. It requires a minimum design standard of a 10-year frequency, 24-hour duration

Preliminary Actions for Designing Cross-Section and Selecting a Lining

This measure should be planned and installed along with, or as part of, other conservation measures in an overall surface water conveyance system. These systems should be designed by a professional engineer.

Lined chutes or flumes should be utilized and constructed carefully. Field experience has shown a significant number of post construction problems with these controls. If the sub-base contains unsuitable material, the chute or flume may be subject to undermining and fracturing. Significant risk also exists if flows do not properly enter the lined waterway and instead drain along the edge of the waterway.

Capacity and Velocity

The installation of this measure should come only after the capacity and velocity have been determined by a detailed design. The measure should be installed and stabilized prior to the introduction of flows.

The design of the waterway is based upon the peak volume and velocity of flow expected in the channel. If conditions are appropriate, vegetation, riprap, other flexible linings or combinations thereof may be used. See **Vegetated Waterway** measure for further discussion.

Capacity

The minimum waterway capacity shall be adequate at a minimum to carry the peak rate of runoff from a 10-year frequency 24-hour duration storm or meet the requirements of the municipal drainage standards, whichever is greater. Flooding risk as well as local and state highway facilities may require a higher design standard. If pre-development flooding problems exist, or if the consequences of flooding are severe, or if drainage systems which convey larger storms converge with the channel in question, consideration should be given to increasing the capacity beyond the 10-year frequency.

Waterway capacity shall be computed using Manning's formula and the Continuity Equation or other appropriate engineering method based on actual conditions (see **Figure 1**).

Velocity

Waterways should be designed so that the velocity of flow from the desired design storm does not cause excessive scour and/or failure of the lining.

- Riprap-lined waterways can be designed to withstand most flow velocities by choosing a stable stone size. The procedures for selecting a stable stone size for channels and installation is contained in **Appendix L, Riprap**. Transition from a riprap lining to vegetative lining must be carefully designed to meet the allowable velocities of each type of lining.
- Turf Reinforcement Matting shall be designed in accordance with the manufacturer's recommendations. See **Appendix K** for more information.
- Gabions shall be designed in accordance with most recent version of the USDA Natural Resources Conservation Service Construction Specification 64 entitled "*Construction Specification 64 - Gabions*" and the manufacturer's recommendations and additional

information is included in **Appendix M**.

- Articulated Concrete Block shall be designed in accordance with the manufacturer's recommendations.
- Other flexible lined channels should be designed based on good engineering measure and recommendations of manufacturers for any manufactured products that are used. FHWA HEC 15 also contains information on engineering calculations for channel design.

See **Figure 7** for an example of a permanent lined chute or flume.

Typical Design Cross-Sections

Trapezoidal waterways are often used where the quantity of water to be carried is large and conditions require that it be carried at a relatively high velocity. Riprap shall extend up the banks of the channel to a height equal to the design depth of flow or to a point where vegetation can be established to adequately protect the channel (see **Figures 2 and 3**).

The riprap size to be used in a channel bend shall extend upstream from the point of curvature a minimum of 0.4 times the water surface width, and downstream from the point of tangency a distance of at least 5 times the channel bottom width. The riprap may extend across the bottom and up both sides of the channel or only protect the outside bank, depending upon specific design requirements. Where riprap is used only for bank protection and does not extend across the bottom of the channel, riprap shall be keyed into the bottom of the channel to a minimum additional depth equal to 1.5 times the maximum size stone (see **Figures 4 and 5**).

For riprapped and other lined channels, the height of channel lining above the design water surface shall be based on the size of the channel, the flow velocity, the curvature, inflows, wind action, flow regulation, etc.

The height of the bank above the design water surface varies in a similar manner, depending on the above factors plus the type of soil, desired freeboard and acceptable flood risk.

Figure 1. Manning's "n" Coefficients

For riprap-lined channels, "n" can be determine from the following equation:

$$n = (0.0395)d_{50}^{\frac{1}{6}}$$

Where,

n = Manning's roughness coefficient
d_{50} = the median size stone in the gradation of riprap (feet)

The following table identifies Manning "n" coefficients for specific linings derived from the USDA-NRCS and the DOT Standard specifications M.12.02 (riprap).

Lining type	"n"
Concrete	0.012 - 0.014
Trowel Finish	0.013 - 0.014
Float Finish	0.013 - 0.017
Gunite	0.016 - 0.022
Flagstone	0.020 - 0.025
Riprap	
Modified (d_{50}=0.42)	0.034
Intermediate (d_{50}=0.67)	0.037
Standard (d_{50}=1.25	0.041

(Credit: *2002 Connecticut Guidelines for Soil Erosion and Sediment Control*)

Figure 2. Typical Waterway Cross-Section

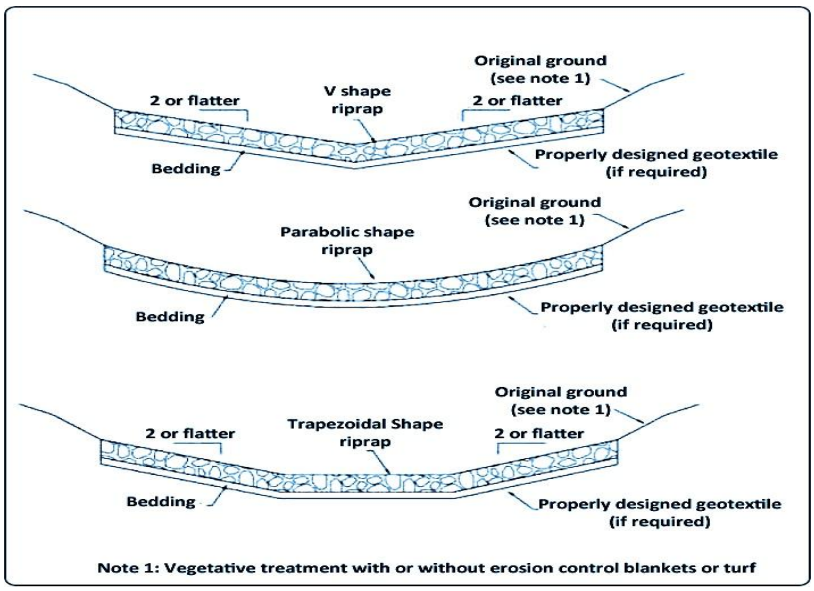

(Credit: *2002 Connecticut Guidelines for Soil Erosion and Sediment Control*)

Figure 3. Waterways with Stone Centers

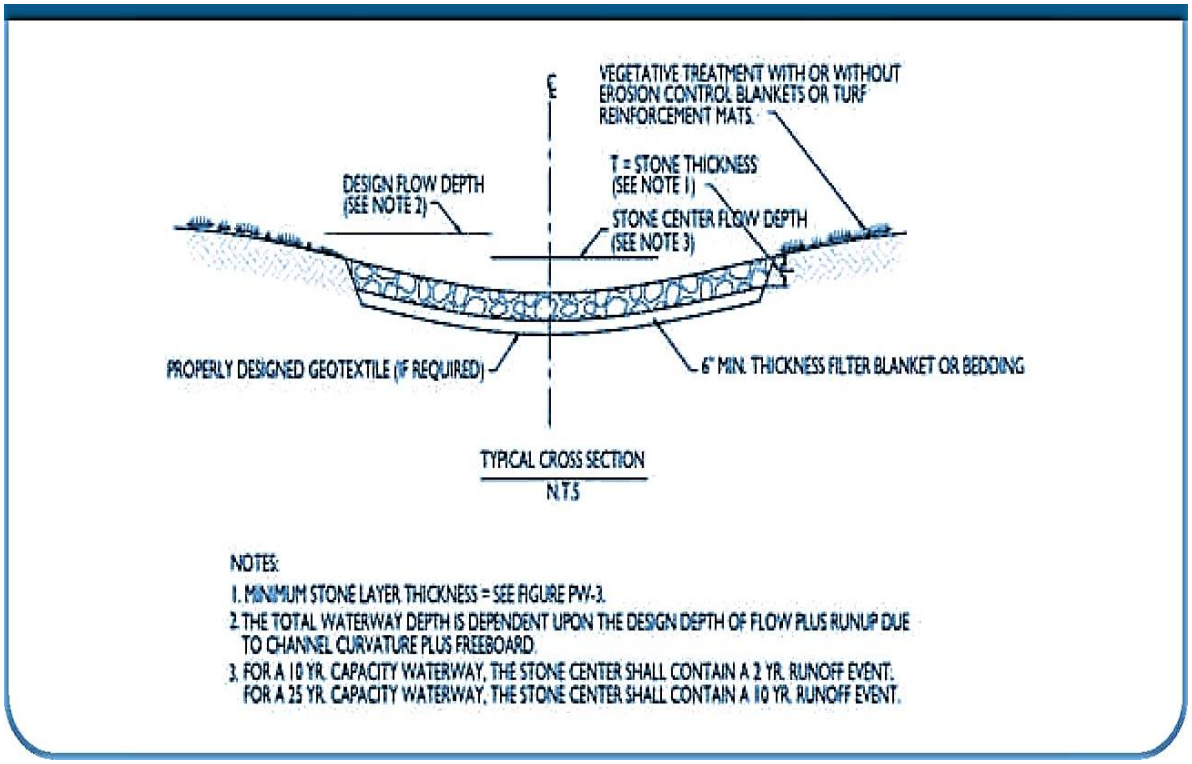

(Credit: *2002 Connecticut Guidelines for Soil Erosion and Sediment Control*)

Figure 4. Riprap for Channel Stabilization

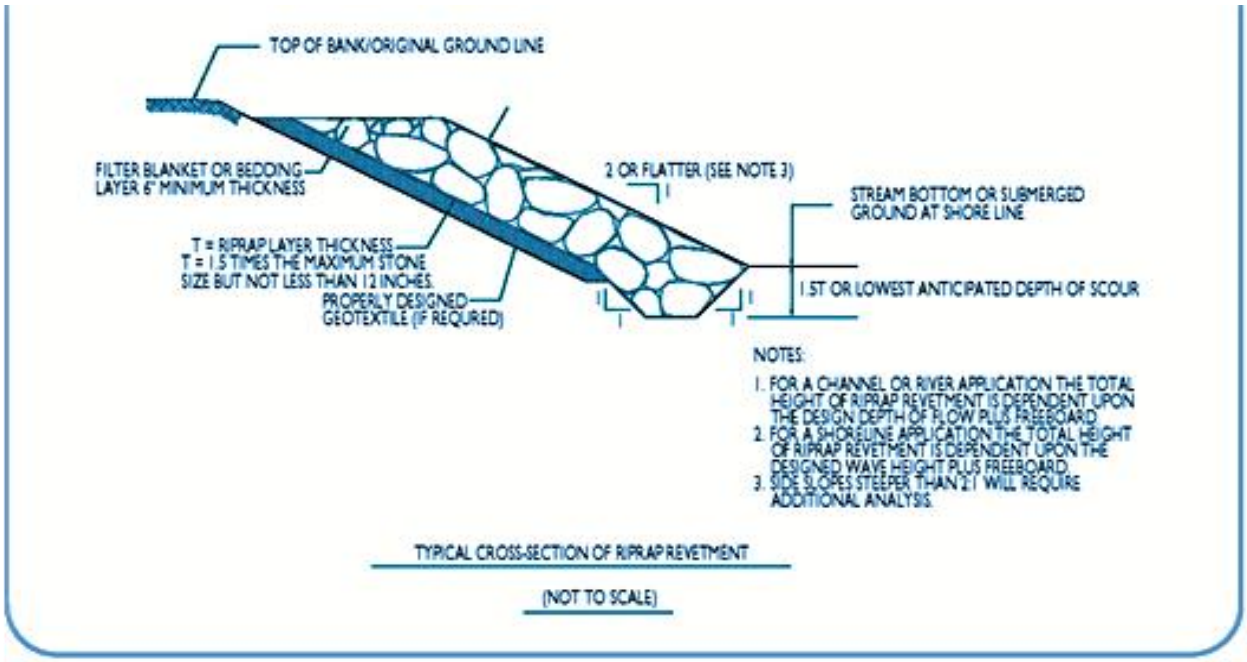

(Credit: *2002 Connecticut Guidelines for Soil Erosion and Sediment Control*)

Figure 5. Riprap for Armored Channel Stabilization

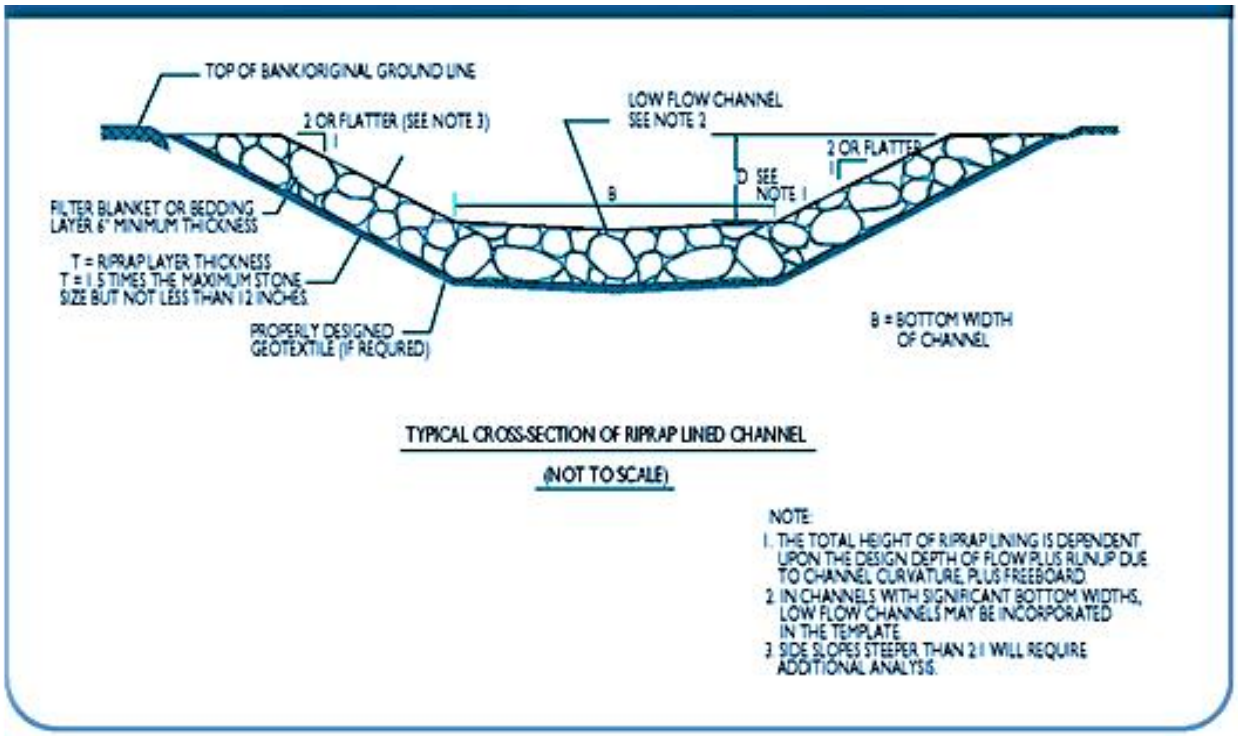

(Credit: *2002 Connecticut Guidelines for Soil Erosion and Sediment Control*)

Freeboard

Use a minimum freeboard of 0.5 ft. if no out-of-bank damage would be expected. Increase freeboard in areas where high damage can be expected from out of bank flow.

Side Slopes

For lined channels, the steepest recommended side slopes are as shown in **Figure 6**.

Figure 6. Channel Lining Recommended Side Slopes

Lining	Steepest Recommended Side Slope
Riprap	2 to 1
Non-Reinforced Concrete - Hand placed, formed concrete Height of lining 1.5 feet or less	vertical
Hand-placed, screened concrete or mortared in-place flagstone Height of lining less than 2 feet	1 to 1
Height of lining more than 2 feet	2 to 1
Reinforced slip form concrete - Height of lining less than 3 feet	1 to 1

(Credit: *2002 Connecticut Guidelines for Soil Erosion and Sediment Control*)

Filters Blankets

Any lined systems are susceptible to failure by the erosion of underlying soils. As a result, filter blankets for each of these systems shall be designed to protect subgrade soils. This filter shall be designed in accordance with the filter requirements for riprap as described in **Slope Protection**.

Outlet

The outlet must handle the design flow without flooding or erosion. The outlet shall be stable for the design storm discharge. Outlets of all channels shall be protected from erosion. Transition from a man-made lining, such as concrete and riprap, to a vegetated or non-vegetated lining shall be taken into consideration. Appropriate measures shall be taken to dissipate the energy of the flow to prevent scour of the receiving channels. See **Outlet Protection**.

Other Considerations

In addition to the primary design considerations of capacity and velocity, a number of other important factors should be taken into account when selecting a cross section and lining. These factors include land availability, compatibility with land use and surrounding environment, safety, maintenance requirements, outlet conditions, soil erodibility factor and tailwater conditions.

FHWA HEC-15 shall be used as a reference for proper design of these systems (see: http://www.fhwa.dot.gov/engineering/hydraulics/pubs/05114/index.cfm)

Installation Requirements

- Remove and properly dispose of all trees, brush, stumps, roots, obstructions and other unsuitable materials so as not to interfere with construction or proper functioning of the permanent lined waterway or unsuitable subgrade that will result in settling.
- Install temporary erosion and sediment controls to protect the site of the permanent lined waterway from sediment deposition while the contributing drainage area is unstable.
- Excavate or shape the channel to the proper grade and cross-section. Consider phasing of channel construction in order to minimize time of exposure in lengthy projects.
- Compact any fills to prevent excessive settlement.
- Remove and dispose of any excess soil properly.

Inspection, Maintenance, and Removal Requirements

- Until the contributing drainage area is stabilized, inspect within 24 hours of the end of a storm with a rainfall greater than 0.25 inches.
- Repair lining as required to ensure its long-term stability.

Figure 7. Example of Permanent Lined Chute or Flume.

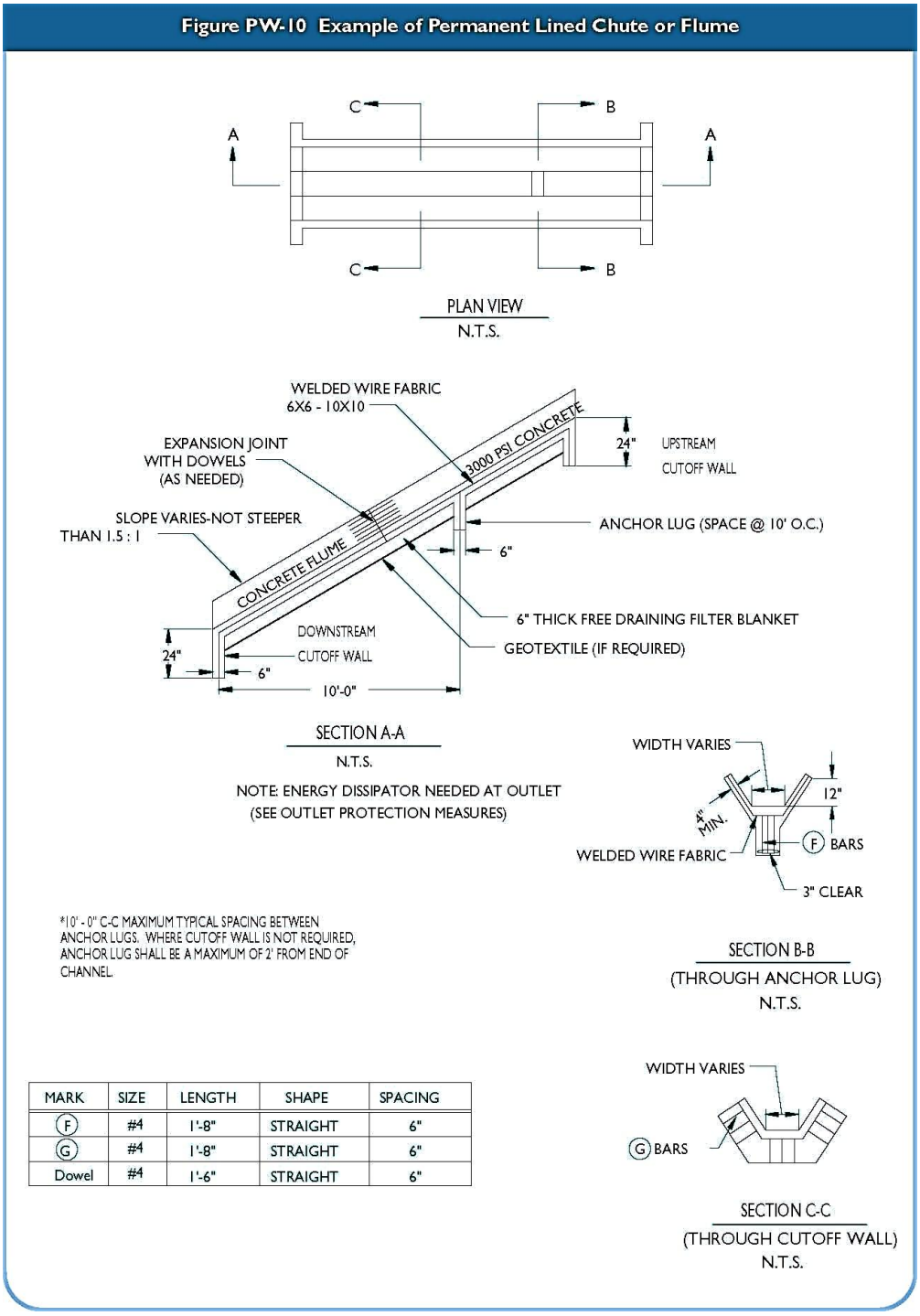

MARK	SIZE	LENGTH	SHAPE	SPACING
F	#4	1'-8"	STRAIGHT	6"
G	#4	1'-8"	STRAIGHT	6"
Dowel	#4	1'-6"	STRAIGHT	6"

(Credit: *2002 Connecticut Guidelines for Soil Erosion and Sediment Control*)

Vegetated Waterways

(Photo Credit: Allamakee SWCD)

Definition

- A natural or constructed channel graded in earth materials and stabilized with non-woody vegetation for the non-erosive conveyance of water.

Purpose

- To provide for the conveyance of intermittent stormwater flows while preventing damage by erosion or flooding.

Applicability

- For man-made channels such as roadside ditches and drainageways.
- Not for use in perennial streams or where flow is anticipated to be persistent enough to inhibit vegetative growth. In conditions of persistent flow use the **Lined Waterway** measure described in**.**
- Not for discharges exceeding 100 cfs for a 10-year frequency storm

Planning and Design Requirements

This measure should be planned and installed along with, or as part of, other conservation measures in an overall surface water conveyance system.

Preliminary Actions

Sequence and schedule construction to ensure the vegetation within the waterway is established before it is used to convey flow. Also, the drainage area contributing to the waterway must be stabilized with proper erosion and sediment controls installed to prevent sedimentation of the waterway. Repeated erosional failures of the waterway can be expected if these two conditions are not addressed. Consider using other measures such as **Sodding, Diversions, Turf Reinforcement Mat (Appendix K)**, and **Grade Stabilization Structures** and other management measures (e.g. irrigation) to hasten the establishment of the grass cover.

Give consideration to channel width, side slopes, and depth as they affect the use of maintenance equipment. For areas to be mowed, the steepest recommended slope is 3:1.

Peak Runoff

The minimum waterway capacity shall be adequate at a minimum to carry the peak rate of runoff from a 10-year frequency 24-hour duration storm or meet the requirements of the municipal drainage standards, whichever is larger. Flooding risk as well as local and state highway facilities may require a higher design standard. If pre-development flooding problems exist, or if the consequences of flooding are severe, or if drainage systems which convey larger storms converge with the channel in question, consideration should be given to increasing the capacity beyond the 10-year frequency.

Waterway capacity shall be computed using Manning's formula and the Continuity Equation or other appropriate engineering method based on actual conditions. Design the vegetated waterway according to generally accepted engineering standards (e.g. the NRCS National Engineering Handbook - Part 650)

Velocity

Design the waterway so that the peak velocity from the design frequency storm shall not exceed the maximum permissible velocity for a vegetative lining given in **Figure 35-1.** Determine the maximum permissible velocity for design flow by the most erodible soil texture exposed and the type of vegetation expected and maintained in the channel.

Determine the minimum capacity and maximum velocity by using the appropriate vegetative retardant factors listed in **Figure 1.**

Figure 1. Maximum Permissible Velocity (Ft/Sec)

Soil Texture	Channel Vegetation Condition[1]			
	Poor	Fair	Good	Stone Center
Sand, silt loam, sandy loam, loamy sand, loam and muck	2.0	2.5	3.5	8.0
Silty clay loam, sandy clay loam, clay, clay loam, sandy clay, silty clay	3.0	4.0	5.0	8.0

[1]For channels with geosynthetic turf reinforcement, permissible velocities shall be designed on a product-specific basis and for long duration flows (>24 hours).

(Credit: *2002 Connecticut Guidelines for Soil Erosion and Sediment Control*)

Dimensions

Size of vegetated waterways shall be determined by acceptable engineering method such as Manning's Equation or the Standard Step method. A description of Manning's Equation is provided in **Figure 1.**

Base the dimensions of the waterway on: the minimum capacity, the channel slope, the maximum permissible velocity, the vegetation, the soil; ease of crossing and maintenance; and site conditions such as water table, depth to rock or possible sinkholes.

The minimum top width shall be 5 feet. The maximum bottom width of a vegetated waterway is 15 feet unless multiple or divided waterways, stone center, or other means are provided to control the meandering of low flows.

Cross-Section Design

Trapezoidal waterways are often used where space is limited.

Parabolic waterways are often used where space is available for a wide, shallow channel with low velocity flow.

Vegetated waterways with stone centers (see **Figure 2**) are useful where there is a persistent but not permanent low flow in the channel. For a channel designed to a 10-year frequency storm, the stone center shall be wide enough to safely pass a 2-year frequency storm. For a channel designed to a larger frequency storm, the stone center shall be wide enough to safely pass a 10-year frequency storm. The stone center shall have 6 inches of gravel bedding or a properly designed geotextile under the stone. If the d_{75} of the stone is 8 inches or greater then a bedding over the geotextile shall be considered in the design to protect the geotextile from puncture during stone placement. The d_{75} of the stone shall be determined from HEC-15. The minimum d_{75} size shall be 3 inches. The d_{100} size shall be 1.5 times the d_{75} size. The d_{15} size shall be 3 inches or one third the d_{75} size, whichever is larger. The stone center shall have a minimum thickness of 12 inches or the d_{100} size, whichever is larger. The stone shall be hard and durable.

Figure 2.Diagram of Vegetated Waterway with Stone Center

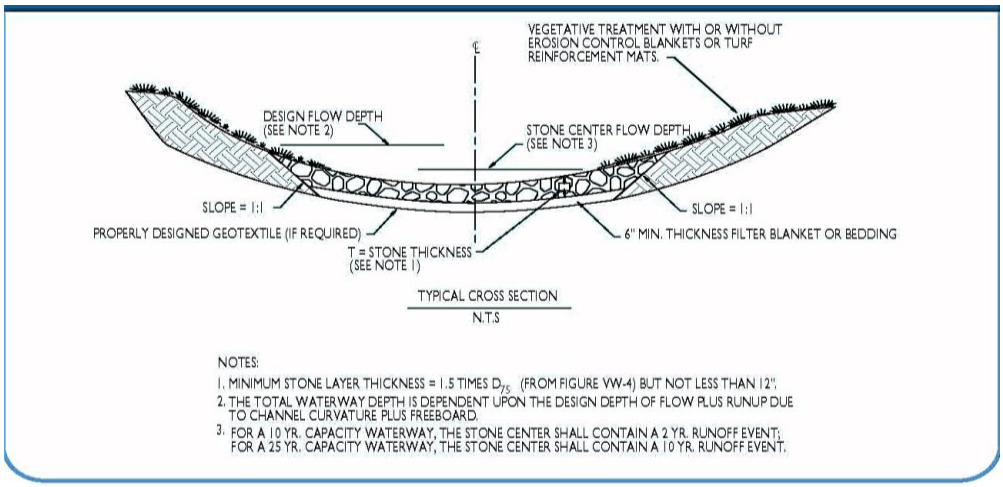

(Credit: *2002 Connecticut Guidelines for Soil Erosion and Sediment Control*)

Grading

The waterway shall be designed to drain with a minimum slope of 1% to ensure proper drainage of the system and no low points where water will pool, vegetation will die and mosquito breeding will occur.

Outlet

The outlet shall be stable for the design storm discharge without erosion or flood damage.

Permanent Cover

Establish a permanent vegetative cover on all vegetated waterways in accordance with **Seeding for Permanent Vegetative Cover** or **Sodding.** Where the permanent vegetative cover is established by seeding, extend the seeding to at least the design top width and include any other areas disturbed by construction activities. For seeded channels with higher velocities where vegetation cannot be established, use Lined Waterways measure.

Installation Requirements

- Remove all trees, brush, stumps and other unsuitable materials and dispose of properly so as not to interfere with construction or proper functioning of the waterway and provide a stable subgrade that will not settle
- Begin construction at the outlet installing outlet protection and continue construction to the inlet.
- Excavate or shape the channel to the design grade and cross-section.
- Compact any fills and rills to prevent unequal settlement.
- Remove any excess soil.
- For a waterway stabilized with permanent seeding, prepare the seedbed in accordance with **Seeding for Permanent Vegetative Cover**.

Temporary Lined Channel

(Photo Credit: State of Rhode Island)

Definition

- A channel designed to convey flows on a short term basis and lined with a flexible impermeable geomembrane or other erosion resistant covering to prevent erosion of concentrated flows.
- Temporary lined channels are intended to convey watercourses from substantially larger areas than temporary diversions.

Purpose

- To provide temporary conveyance of water through a stable channel either until a stable permanent channel is established or until site construction that required the temporary relocation has been completed.

Applicability

- A channel that is designed to convey flows on a short-term basis and is lined with a flexible, impermeable, geomembrane (or other erosion resistant material) to prevent erosion by concentrated flows.
- Where the temporary relocation of a drainageway is needed to complete other construction work or to allow for the establishment of vegetation in a permanent channel.

Note: Use is limited to 60 days when lined with flexible impermeable geomembrane.

Planning and Design Requirements

Temporary lined channels differ from temporary diversions in that temporary diversions are intended only to convey stormwater collected from areas no greater than 5 acres and temporary lined channels are intended to convey watercourses from substantially larger areas. Like temporary diversions they assist in isolating off-site flows from construction activities.

Design Storm

Once the design storm is chosen, design the temporary lined channel according to generally accepted engineering standards (e.g., NRCS Field Office)

Design the minimum runoff to carry the peak flow expected from a 2-year frequency, 24-hour duration storm without erosion.

Lining Selection

Lining is required to protect the channel from erosion and shall be in conformance with the manufacturer's recommendations for use in flow conditions.

- Impermeable geomembranes: made of plastic sheeting or similar material at least 6 mils thick.
- Permanent Channel Linings: an erosion resistant lining of concrete, stone, or other permanent material. Required when use exceeds 60 days or the watershed exceeds 100 acres. See Permanent Lined Waterway measure for design requirements.

Choosing a flexible impermeable geomembrane, such as plastic sheeting, over other linings is generally dependent upon watershed size, length of use and flow characteristics. When geomembrane applicability limitations are exceeded, use permanent channel linings. While the same channel linings used in the Permanent Lined Waterway measure may be used in this measure, these linings are sufficiently expensive to consider alternate construction methodologies or construction sequences that avoid the need for a temporary lined channel.

Risk Assessment

No matter the channel lining used, a risk assessment is required to determine proper channel size. The risk assessment used in the Design Criteria provides for a smaller sized channel over that normally required because the time of exposure is limited when using a temporary lined channel. If the time of use for this measure is at all questionable, opt for a more conservative approach. The best approach is to plan construction schedules and sequences so that the need for temporary lined channels is as short as possible to reduce the exposure to storms that exceed the design storm provided by the risk assessment.

Installation Requirements

All Temporary Lined Channels

Check weather forecasts to insure a storm is not predicted during the time of construction. Delay construction until after the threat of rainfall has passed.

Impermeable Channel Linings

- Shape and prepare the channel to receive the lining.
- Remove all rocks, stones, debris, sticks, or any other material exposed that could puncture the lining.
- Bury the upper end of the lining in a trench at least 6 inches deep. At least every 40 feet

of channel, a fold of the plastic lining shall be buried in a trench at least 6 inches deep. The edges of the lining shall be buried in a 6-inch trench or at least 6 inches of soil mounded over the edges of the plastic.

- When joining materials (liner sheets), follow manufacturer's installation recommendations. Liners may have different joining requirements that need to be followed in order to perform as designed. If liner sheets are to be overlapped, typically it is in a down-gradient direction such that the up-gradient sheet is laid above and over the down-gradient sheet, in some cases, by thee (3) feet.

Inspection and Maintenance Requirements

For temporary channels containing impermeable geomembranes, inspect daily for undercutting of and damage to the lining. Repair and patch as needed. For temporary channels containing permanent channel linings, inspect at least once a week and within 24 hours of the end of a storm with a rainfall amount of 0.5 inch or greater. Repair as needed.

Pipe Slope Drains

(Photo Credit: NY State Standards and Specifications for Erosion and Sediment Control, 2005)

Definition

- A temporary structure placed from the top of a slope to the bottom of a slope.

Purpose

- The purpose of the structure is to convey surface runoff down slopes without causing erosion.

Applicability

- Pipe slope drains are used where concentrated flow of surface runoff must be conveyed down a slope in order to prevent erosion. The maximum allowable drainage area shall be 3.5 acres.

Planning and Design Requirements

General

Follow the sizing described in **Figure 1**.

Figure 1. Required Diameter Based on Drainage Area

Pipe/Tubing Diameter (in.)	Maximum Drainage Area (ac.)
12	0.5
18	1.5
21	2.5
24	3.5

(Credit: *2002 Connecticut Guidelines for Soil Erosion and Sediment Control*)

Inlet

The minimum height of the earth dike at the entrance to the pipe slope drain shall be the diameter of the pipe (D) plus 12 inches. The minimum width of the top of the dike shall be 4-feet.

Outlet

The pipe slope drain shall outlet into a sediment trapping device when the drainage area is disturbed. A riprap apron shall be installed below the pipe outlet where water is being discharged.

Installation Requirements

- The pipe slope drain shall have a slope of 3 percent or steeper.
- The top of the earth dike over the inlet pipe, and those dikes carrying water to the pipe, shall be at least one (1) foot higher at all points than the top of the inlet pipe. The minimum width of the top of the dike shall be 4-feet.
- Corrugated plastic pipe or equivalent shall be used with watertight joint.
- A flared end section shall be attached to the inlet end of pipe with a watertight joint.
- The soil around and under the pipe and end sections shall be hand tamped in 4 in. lifts to the top of the earth dike.
- Where flexible tubing is used, it shall be the same diameter as the inlet pipe and shall be constructed of a durable material with hold down grommets spaced 10 ft. on centers.
- The flexible tubing shall be securely fastened to the corrugated plastic pipe with metal strapping and watertight joints or connecting collars.
- The flexible tubing shall be securely anchored to the slope by staking at the grommets provided.
- Where a pipe slope drain outlets into a sediment trapping device, it shall discharge at the riser crest or weir elevation.
- A riprap apron shall be used below the pipe outlet where clean water is being discharged into a stabilized area. See **Figure 2**.

Figure 2. Guide for Temporary Berms and Pipe Slope Drains

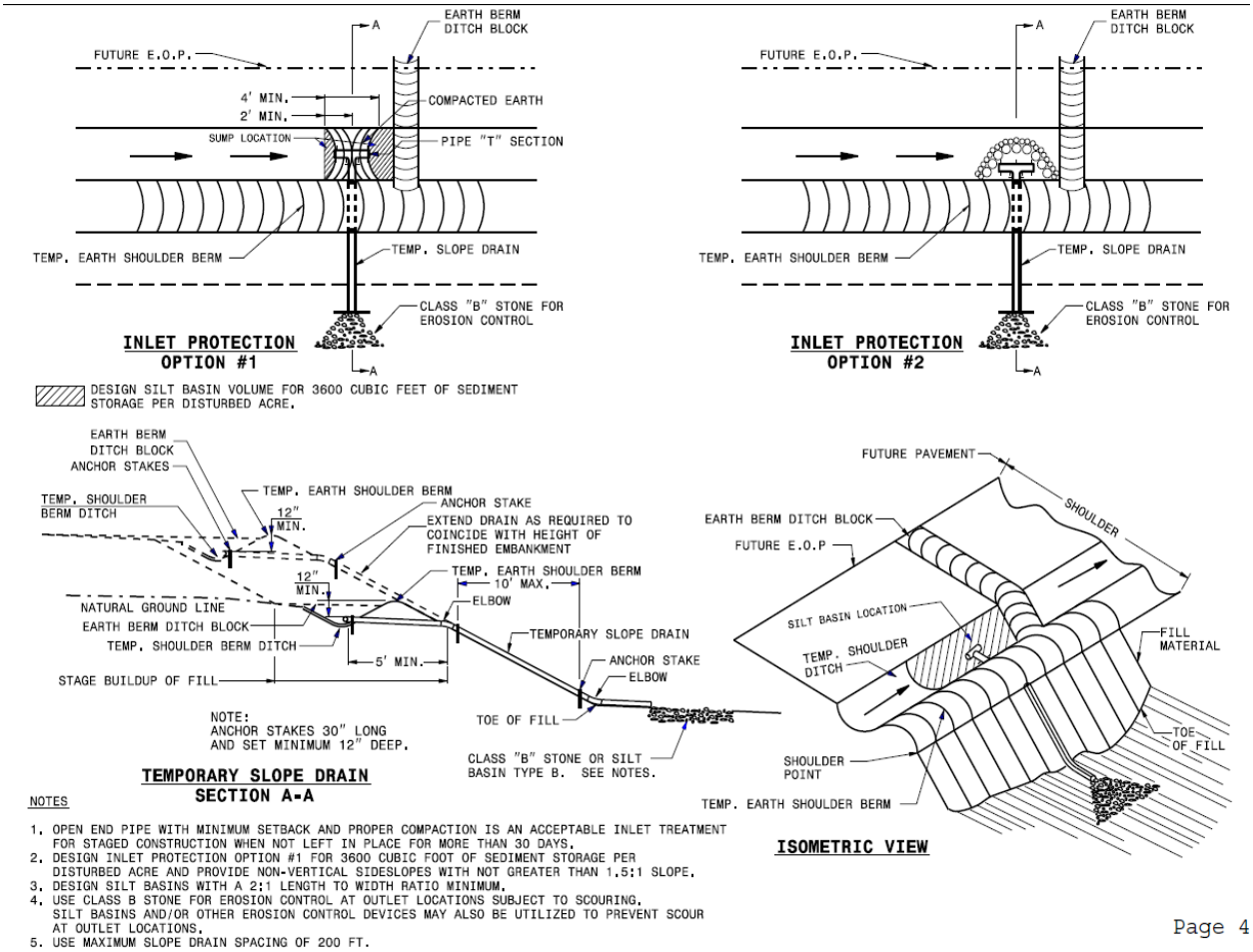

Inspection, Maintenance, and Removal Requirements

Inspection and any needed maintenance shall be performed after each storm. A temporary slope drain should remain in place up to 30 days after slopes have been completely stabilized.

Grade Stabilization Structures

(Photo Credit: NY State Standards and Specifications for Erosion and Sediment Control, 2005)

Definition

- A structure to stabilize the grade or to control "head cutting" in natural or artificial channels. Head cutting is a condition of soil erosion represented by a sudden change in the bed elevation within a gully or stream forming an obvious downward step (in the direction of flow). The erosion of the gully or stream primarily results from this 'step' migrating up the gully line or stream channel.

Purpose

- Grade stabilization structures are used to lower water from one elevation to another, while reducing or preventing excessive erosion by reducing velocities and grade in the watercourse or providing structures that can withstand the higher velocities.

Applicability

- This measure applies to sites where the capability of earth and vegetative measures is exceeded in the safe handling of water at permissible velocities, where excessive grades or overfall conditions are encountered, or where water is to be lowered structurally from one elevation to another.
- Overfall structures are applicable where it is desirable to drop the watercourse elevation over a very short horizontal distance.
- It does not apply to storm sewers or their component parts.

Planning and Design Requirements

Typical structures are as follows:

- Overfall structures of concrete, metal, rock riprap, or other suitable material is used to lower water from one elevation to another.
- Pipe drops of metal pipe with suitable inlet and outlet structures (see **Figure 1**). The inlet structure may consist of a vertical section of pipe or similar material, an embankment, or a combination of both.

Figure 1. Pipe Drop Schematic

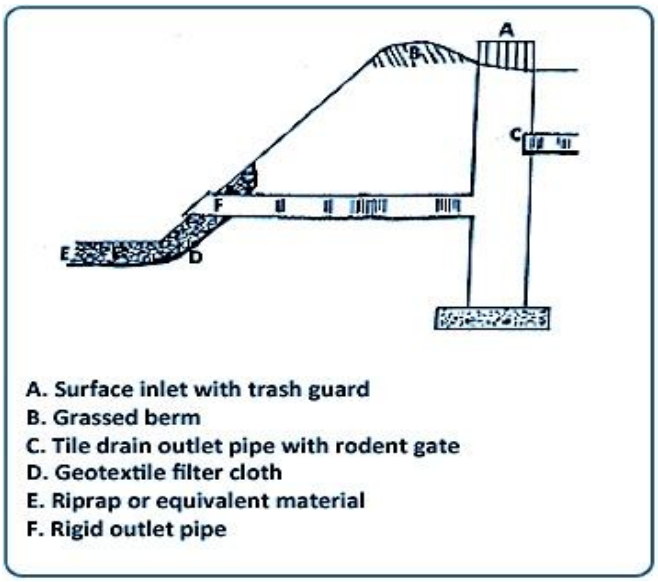

(Credit: CT E&S Guidelines 2002)

Capacity

Structures that are designed to operate in conjunction with other erosion control measures shall have, as a minimum, capacity equal to the bankfull capacity of the channel delivering water to the structures.

Structures that are not designed to perform in conjunction with other measures, at a minimum, shall be that required to handle the peak rate of flow from a 10-year, 24-hour frequency storm or bankfull, whichever is greater. Peak rates of runoff used in determining the capacity requirements shall be determined by TR-55, Urban Hydrology for Small Watersheds, or other appropriate method. Inlet, outlet and barrel capacity shall be considered in the design.

Set the inlet(s) of the structure at an elevation that will stabilize the grade of the upstream channel. The outlet should be set at an elevation to assure stability. Outlet velocities should be kept within the allowable limits for the receiving stream. Structural drop spillways need to include a foundation drainage system to reduce hydrostatic loads.

Structures which involve the retarding of floodwater or the impoundment of water shall be designed using the criteria set forth in Chapter 7 of the Rhode Island Stormwater Design and Installation Standards Manual.

Installation Requirements

Overfall structures shall be located on straight sections of channel with a minimum of 100 feet of straight channel upstream and downstream from the structure. Adequate protection shall be provided to prevent erosion or scour upstream, downstream and along sides of overfall structures.

The pipe drop outlet structure shall provide adequate protection against erosion or scour at the pipe outlet.

Structures shall be installed according to lines and grades shown on the plan. The foundation for structures shall be cleared of all undesirable materials prior to the installation of the structure. Materials used in construction shall be in conformance with the design frequency and life

expectancy of the measure. Earth fill, when used as a part of the structure, shall be placed in 4-inch lifts and hand compacted within 2feet of the structure.

Seeding, fertilizing, and mulching shall conform to the recommendations.

Locate emergency bypass areas so that flooding in excess of structural capacity enters the channel far enough downstream so as not to cause damage to the structure.

Inspection, Maintenance, and Removal Requirements

Once properly installed, the maintenance for the grade stabilization structure should be minimal. Inspect the structure periodically and after major storm events. Check fill for piping or extreme settlement. Ensure a good vegetative cover. Check the channel for scour or debris and loss of rock from aprons. Repair or replace failing structures immediately.

Outlet Protection

(Photo Credit: MACC ESC Guide)

Definition

- Any of various devices that dissipate energy at the outlet to a diversion, pump, or other water conveyance, including but not limited to:
- Level Spreader – Depression with a broad stable discharge constructed at zero grade across a slope
- Riprap Outlet Protection – Armored discharge areas that mitigate flow velocities.
- Plunge Pool – Similar to riprap outlet protection but incorporates a pool to dissipate energy.
- Scour Protection Mats – Rigid manufactured rubber or polypropylene matting systems.
- Turf Reinforcement Mats – Non degradable three-dimensional matting designed to reinforce vegetation, allowing the vegetation to withstand high energy flows.

Purpose

- To stabilize soils where the velocity and energy resulting from concentrated flows will result in erosion. The objective of these measures is to reduce velocity and energy such that the flow can be conveyed downstream without risk of erosion.

Applicability

- Outlet protection should be used at any location where concentrated flows generate velocity and energy than could potentially destabilize existing soils. Examples include storm drain outfalls, culverts, chutes and flumes, and outlets of channels.

Planning and Design Requirements

Outlet protection should be designed to be protective of at a minimum the design storm of the system that is draining to it. Criteria provided below are for flows from a 10-year frequency storm that is equal to or less than 20 cfs ($Q_{10} \leq 20$ cfs). For higher flows, a professional engineer should design measures that will result in a diffuse non-erosive discharge.

Level Spreader

Note: Level spreaders should be designed combined with other outlet protection devices just upstream of the level spreader to ensure that velocities entering the level spreader are low enough to avoid short-circuiting.

The level spreader is a relatively low-cost structure to convert concentrated flow to sheet flow across stabilized areas where site conditions are suitable. See **Figures 1 and 2**.

Check the proposed location of the level spreader to ensure it can be constructed on level, stable, and undisturbed ground. Any depressions in the outlet lip of the spreader could concentrate flow, and result in erosion. Ensuring that water will drain across a level feature is an essential component of the design of a level spreader. See **Figure 3**.

Check conditions down-slope from the spreader to ensure the runoff water will not re-concentrate after release unless it occurs during interception by another measure (such as a permanent pond or detention basin) located below the level spreader. Slopes shall be sufficiently uniform to preserve sheet flow and prevent flow from concentrating.

Also, check conditions down-slope from the spreader to ensure that existing covers over the soils are adequate to resist velocities that will be generated during the design storm of the system. Depending on level of risk of erosion, a factor of safety could be incorporated into the sizing of the level spreader to further protect against erosion.

For higher design flow conditions (>5 cfs), a rigid outlet lip design is required to ensure the desired sheet flow conditions. Concrete curbing is one example of a rigid lip. Regardless of the approach used for a rigid lip, consideration should be given to designing it with frost protection to prevent frost heaves from creating low points resulting in concentrated flows. See **Figure 4**.

Figure 1. Conduit Outlet Level Spreader

NOTE: FOR USE AS CONDUIT OUTLET PROTECTION WHERE THERE IS NO WELL DEFINED CHANNEL IMMEDIATELY DOWNSTREAM

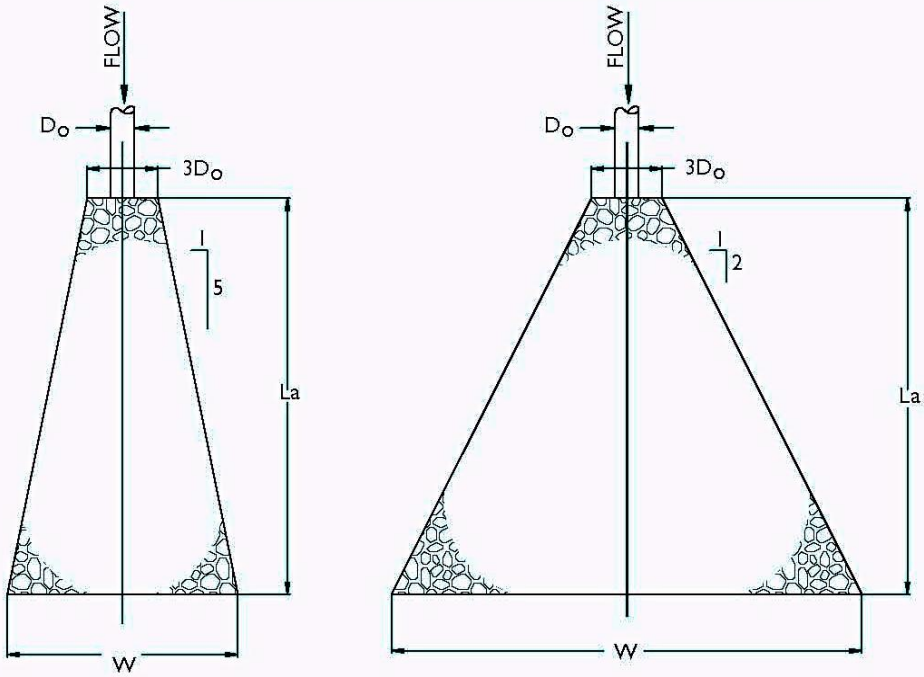

$W = 3D_o + 0.4L_a$
TAILWATER $\geq 0.5D_o$

$W = 3D_o + L_a$
TAILWATER $< 0.5D_o$

Design Example

Given: D_o = 1.5 ft, Q = 14.5 cfs, TW = 0.7 ft.
Find: L_a, W, d_{50}

$$L_a = \frac{1.7Q}{D_o^{3/2}} + 8D_o = \frac{1.7(14.5\text{ cfs})}{1.5^{3/2}} + 8(1.5) = 25.4$$

$$L_a = 25.4\text{ ft.}$$

$$W = 3D_o + L_a = 3(1.5\text{ ft.}) + 25.4\text{ ft.} = 29.9\text{ ft. (Say 30 ft.)}$$

Median Stone Diameter:

$$d_{50} = \left(\frac{0.02}{TW}\right)\left(\frac{Q}{D_o}\right)^{4/3} = \left(\frac{0.02}{0.7}\right)\left(\frac{14.5}{1.5}\right)^{4/3} = 0.58 = 7\text{ inches}$$

(Credit: *2002 Connecticut Guidelines for Soil Erosion and Sediment Control*)

Figure 2. Outlet Protection Using a Riprap Stilling Basin

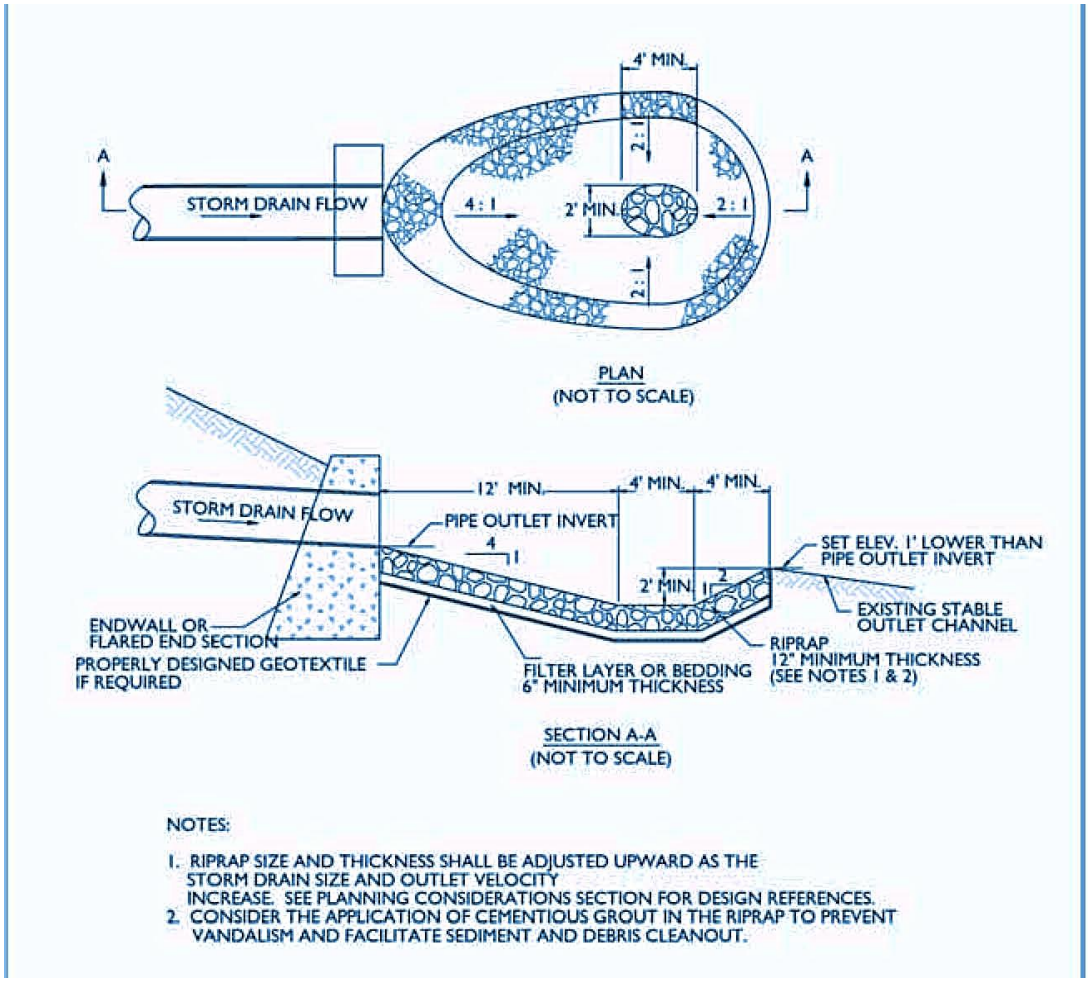

(Credit: *2002 Connecticut Guidelines for Soil Erosion and Sediment Control*)

Figure 3. Level Spreader with Rigid Lip

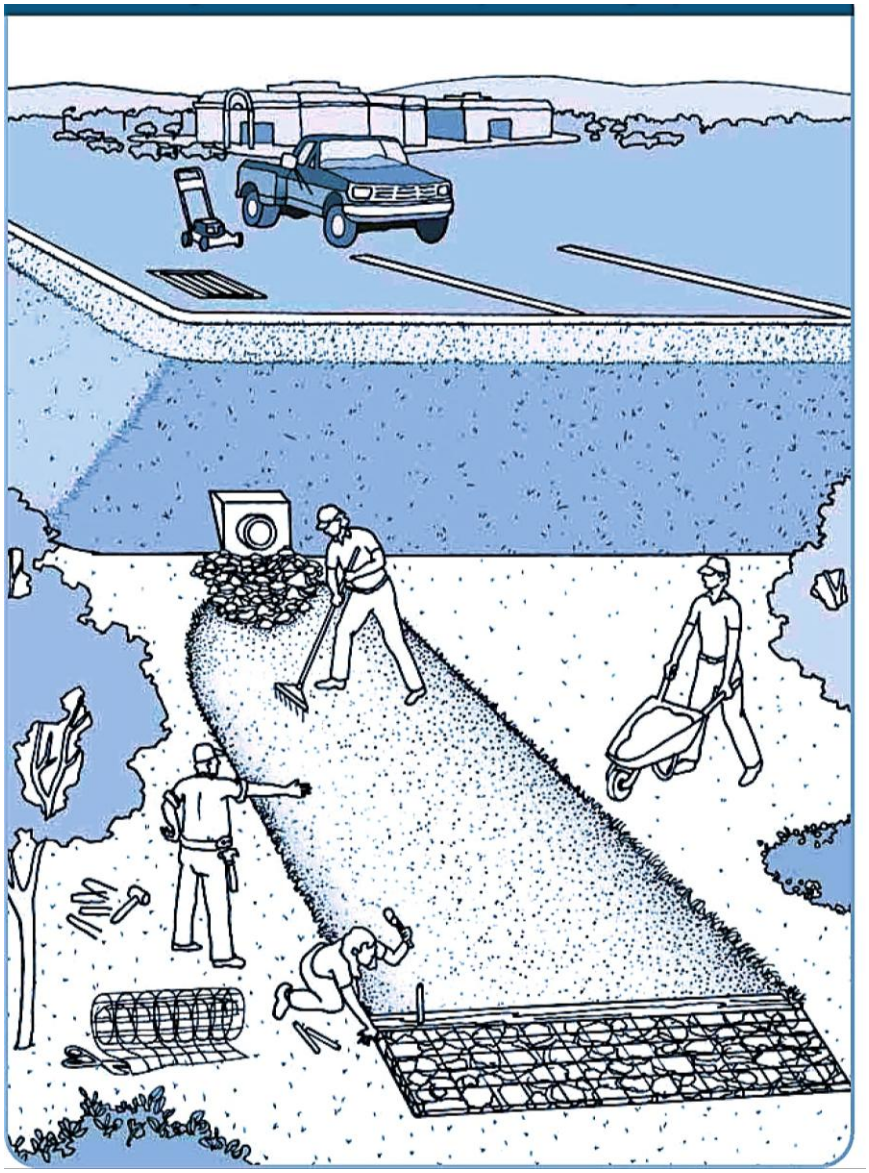

(Credit: *2002 Connecticut Guidelines for Soil Erosion and Sediment Control*)

Dimensions

Determine the size of the level spreader by estimating the peak flow expected from the design storm of the system draining to it.

Calculate the length of the level spreader so that the velocity of the level spreader is at least equal to or less than the permissible velocity of the cover soils and soils of the downstream reach below the level spreader. See **Figure 39-1** as a guide for allowable velocities.

Make the depth of the level spreader, as measured from the lip, at least 6 inches. The depth may be made greater to increase temporary storage capacity, improve trapping of debris , enhance settling of any suspended solids, as well as to better distribute flow across the level spreader.

Avoid orienting the outfall into the spreader in a manner that causes short circuiting over the top of the spreader. For example, the flows draining from the outfall to the spreader could short circuit

through the spreader and "skip" over the level weir so that concentrated flow is still discharged. This is more common when level spreaders and oriented perpendicular to the outfall. An alternative approach with less risk is if the level spreader is oriented parallel with the outfall (see **Figure 39-5**). Another approach to mitigating the potential for water to short-circuit across the level spreader is to construct a plunge pool between the outfall and spreader in order to reduce energy to a point that will allow water to be redistributed across the spreader. The size of this pool is a function of the peak flow and energy that is directed to it and the orientation of the spreader.

Figure 4. Level Spreader Outfall Orientations

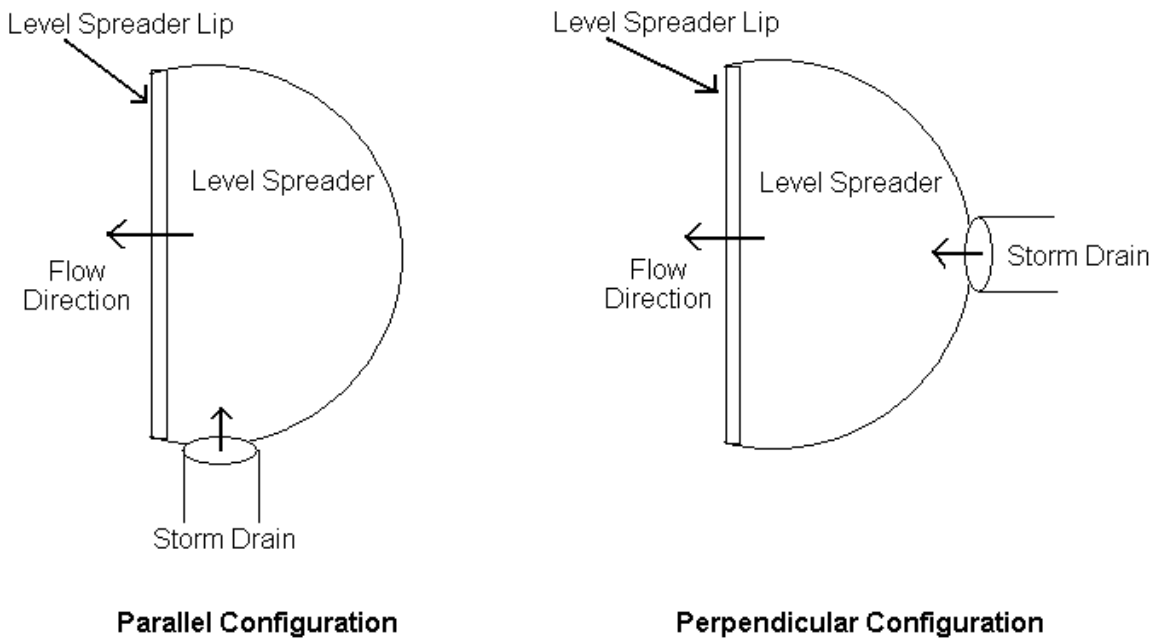

(Designed by Harry Oakley III, Credit: Dean Audet)

Spreader Lip

The level lip of the spreader shall be of uniform height and zero grade over the length of the spreader with its discharge to an undisturbed well-vegetated area having a maximum slope of 5%. Slopes shall be sufficiently uniform to preserve sheet flow and prevent flow from concentrating.

The level spreader lip may be stabilized by vegetation or may be of a rigid non-erodible material depending on the expected design flow.

A vegetated level lip shall be constructed with an erosion-resistant material, such as permanent turf reinforcement matting or temporary erosion control blankets, to inhibit erosion and allow vegetation to become established. For higher design flows and permanent installations, a rigid lip of non-erodible material, such as pressure-treated timbers or concrete curbing, shall be used.

The area downstream of the level spreader shall be protected throughout construction to ensure that it is either undisturbed or permanently stabilized prior to stormwater being allowed to drain from the level spreader.

If a riprap apron is selected for a level spreader, **Figure 6** may be used for design of the measure.

Figure 6. Minimum Dimensions for Level Spreader

Design Flow, Q_{10} (cfs)	Depth (ft.)	Width of Lower Side Slope of Spreader (ft.)	Length (ft.)
0 – 10	0.5	6	10
10 – 20	0.6	6	20

(Credit: *2002 Connecticut Guidelines for Soil Erosion and Sediment Control*)

Rock Outlet Protection

The most commonly used device for outlet protection is a riprap-lined apron. Where practical, they are constructed at a zero grade or minimum slope to slow the outlet velocity. The type and length of the riprap-lined apron is related to the outlet flow rate and the tailwater level and whether there is a defined channel downstream.

If the tailwater depth is less than half the outlet pipe rise, it shall be classified as a Minimum Tailwater Condition. If the tailwater depth is greater than or equal to half the outlet pipe rise, it shall be classified as a Maximum Tailwater Condition.

There are three types of riprap aprons to be used for outlet protection. They are designated as Type A, B and C. Type A riprap aprons would be used under minimum tailwater conditions while Type B riprap aprons would be used for maximum tailwater conditions as defined above, where the pipe outlets overland with no defined channel. Type C riprap aprons would be used when there is a well defined channel downstream of the outlet. The use of a Type C riprap apron on channels that are designated as watercourses or wetlands is discouraged due to potential wetland and fisheries impacts.

Where the flow rate proves to be excessive for the economical or practical use of an apron, preformed scour holes may be used. There are two types of preformed scour holes. Type 1 preformed scour holes are depressed one-half the pipe rise and Type 2 preformed scour holes are depressed the full pipe rise.

In most cases, a riprap apron or preformed scour hole will provide adequate outlet protection, however where design and site conditions warrant, structurally lined outlet protection or energy dissipators can be investigated. In such instances, coordination with the Hydraulics and Drainage Section early in the design phase is recommended. The design of energy dissipators is presented in HEC-14, "Hydraulic Design of Energy Dissipators For Culverts and Channels." Other references include:

- Hydraulic Design of Stilling Basins and Energy Dissipators, Engineering Monograph No. 25, U.S. Department of the Interior, Bureau of Reclamation.
- Scour at Cantilevered Pipe Outlets – Plunge Pool Energy Dissipator Design Criteria, Agricultural Service Research Publication ARS-76, 1989.

(The above are available from the U.S. Government Printing Office.)

- Plunge Pool Design at Submerged Pipe Spillway Outlets, American Society of Agricultural Engineers, Volume 37(4):1167-1173, 1994.

Design Limitations

The design of riprap outlet protection applies to the immediate area or reach downstream of the pipe outlet and does not apply to continuous rock linings of channels or streams. For pipe outlets at the top of exit slopes or on slopes greater than 10%, the designer should assure that suitable

safeguards are provided beyond the limits of the localized outlet protection to counter the highly erosive velocities caused by the reconcentration of flow beyond the initial riprap apron. Outlet protection shall be designed according to the following criteria:

- Riprap outlet protection shall be used at all outlets not flowing over exposed rock or into deep watercourses and ponds.
- In situations not covered by the above noted criteria and where the exit velocity is < 14 fps, a riprap apron shall also be used. For Type A and B riprap aprons, the type of riprap specified is dependent on the outlet velocity. For Type C aprons, the type of riprap specified is determined by the procedures in HEC-15 and HEC-11 depending on the design discharge.
- When the outlet velocity is > 14 fps, the designer should first investigate methods to reduce the outlet velocity. This may be accomplished by any one or combination of the following: increasing the pipe roughness, increasing the pipe size and/or decreasing the culvert slope. When this is not possible or economical, a number of outlet protection or energy dissipation design options are available. These are presented in detail in HEC-14. In most instances, however, a preformed scour hole design should be used, as it generally can provide the necessary degree of protection at an economical cost.

The design criteria of this section should be applicable to most outlet situations. However, recognizing that design and site conditions can vary significantly depending on the project or location on a particular project, it is the responsibility of the designer to ensure that the criteria is suitable to the site or to provide an alternate design which will adequately protect the outlet area from scour and erosion. These situations should be documented in the drainage design report.

There shall be no vertical drop from the end of the apron to the receiving channel.

Apron Dimensions

If an apron is used for energy dissipation, the following criteria apply:

- The length of the apron, L_a, shall be determined from the formula:

  $$L_a = (1.7Q)/(D_o^{3/2}) + 8D_o$$

  where: D_o is the maximum inside culvert width in feet, and

  Q is the pipe discharge in cubic feet per second (cfs) for the conduit design storm or the 25-year storm, whichever is greater.

- The width of the apron, W, shall be determined as follows:
  - Where there is a well-defined channel downstream of the apron, the bottom width of the apron shall be at least equal to the bottom width of the channel. The structural lining shall extend at least one foot above the tailwater elevation but no lower than two-thirds of the vertical conduit dimension above the conduit invert.
  - Where there is no well-defined channel immediately downstream of the apron, the width, W, of the outlet end of the apron shall be as follows:

For tailwater elevation greater than or equal to the elevation of the center of the pipe, $W = 3 D_o + 0.4 L_a$ For tailwater elevation less than the elevation of the center of the pipe, $W = 3 D_o + L_a$

where:

L_a is the length of the apron determined from the length formula and D_o is the culvert width.

The width of the apron at the culvert outlet shall be at least three times the culvert width.

- The side slopes shall be 2:1 or flatter.
- The bottom grade shall be 0.0% (level).
- There shall be no vertical drop at the end of the apron or at the end of the culvert.

Riprap Requirements

- The median stone diameter, d_{50} in feet is determined using the formula for d_{50} found in the Outlet Protection Design Example Problem on page 5-10-8 where:

Q and D_o are as defined under apron dimensions and

TW is tailwater depth above the invert of the culvert in feet.

- At least 50% by weight of the riprap mixture shall be larger than the median size stone designated as d50. The largest stone size in the mixture shall be 1.5 times the d50 size. The riprap shall be reasonably well graded.
- The thickness of riprap lining, filter and quality shall meet the requirements in the riprap standard.
- Concrete paving may be substituted for riprap. However, this method may not provide for energy dissipation.
- Gabions or precast cellular blocks may be substituted for riprap if the d50 size calculated above is less than or equal to the thickness of the gabions or concrete revetment blocks.

See **Figure 7**, Design Example Problem.

Figure 7. Outlet Protection Design Example Problem

Given: $D_o = 1.5$ ft, $Q = 14.5$ cfs, $TW = 0.7$ ft.
Find: L_a, W, d_{50}
Solution:

For L_a (length of apron):

$$L_a = \frac{1.7Q}{D_o^{3/2}} + 8D_o = \frac{1.7(14.5\text{ cfs})}{1.5^{3/2}} + 8(1.5) = 25.4$$

Answer: $L_a = 25.4$ ft.

For W (apron width):

$$W = 3D_o + L_a = 3(1.5) + 29.9\text{ ft.}$$

Answer: $W = 30$ ft.

For d_{50} (median stone diameter):

$$d_{50} = \left(\frac{0.02}{TW}\right)\left(\frac{Q}{D_o}\right)^{4/3} = \left(\frac{0.02}{0.7}\right)\left(\frac{14.5}{1.5}\right)^{4/3} = 0.58\text{ ft.}$$

Answer: $d_{50} = 0.58$ ft. or 7 inches

(Credit: *2002 Connecticut Guidelines for Soil Erosion and Sediment Control*)

Scour Protection Mats, Turf Reinforcement Mats, and Other Proprietary Systems

Each of these solutions can provide effective dispersal of concentrated flows at the termination point of drainage outlets.

Project designers are advised to only specify or allow products that have been independently tested.

The project design criteria and site conditions will determine the applicability of any of these product groups.

Installation Requirements

General

Outfalls and outfall protection should be constructed and stabilized prior to any upstream drainage system being constructed and discharging to these areas.

Soil Texture	Allowable Velocity (ft./sec.)
Sand and sandy loam	2.5
Silt Loam	3.0
Sandy clay loam	3.5
Clay loam	4.0
Clay, fine gravel, graded loam to gravel	5.0
Cobbles	5.5
Shale	6.0

(Credit: *2002 Connecticut Guidelines for Soil Erosion and Sediment Control*)

Level Spreader

- Construct the level spreader on undisturbed soil (not fill material).
- Shape the entrance to the spreader in such a manner as to ensure that runoff enters directly onto the 0.0% channel.
- Construct a transition section from the diversion channel to blend smoothly to the width and depth of the spreader.
- Construct the level lip at 0.0% grade to ensure uniform spreading of storm water runoff flow.
- The protective covering for a vegetated lip shall be a minimum of 4 feet wide extending 6 inches over the lip and buried 6 inches deep in a vertical trench on the lower edge. Butt the upper edge of smoothly cut sod, and securely hold in place with closely spaced heavy duty wire staples.
- Entrench the rigid level lip at existing ground and securely anchor to prevent displacement. Stabilize the disturbed area around the spreader immediately after its

construction (see **Seeding for Permanent Vegetative Cover; Mulching; and Slope Protection**).

Rock Outlet Protection

- Place outlet protection either on native soils or well compacted fill.
- Place designed filter blanket under rock outlet protection.
- Rock shall be placed in a manner that does not damage the filter blanket.
- Avoid disturbance to the area immediately downstream of the outlet protection.

Alternatives to Riprap

Scour protection mats, turf reinforcement mats and other proprietary systems must be installed in strict compliance with manufacturer's written instructions. It is critically important to assure that flow energy is not allowed to undermine these structures and appropriate filter blanket is employed.

Inspection, Maintenance, and Removal Requirements

Level Spreader

- For temporary installations, inspect the level spreader at least once a week and within 24 hours of the end of a storm with a rainfall amount of 0.25 inch or greater to determine maintenance needs.
- For permanent installations, inspect after major rainstorms or once a year.
- Maintain the level spreader lip at 0.0% slope to allow for proper functioning of the measure.
- Avoid the placement of any material on and prevent construction traffic across the structure.
- If the measure is damaged by construction traffic, repair it immediately.

Rock Outlet Protection

Once a riprap outlet has been installed, the maintenance needs are very low. It should be inspected after high flows for evidence of scour beneath the riprap or for dislodged stones. Repairs should be made immediately.

Scour Protection Mats, Turf Reinforcement Mats, Reno Mattresses, Revetment Mats

Once a riprap outlet has been installed, the maintenance needs are very low. It should be inspected after high flows for evidence of scour beneath the riprap or for dislodged stones. Repairs should be made immediately.

SECTION SIX:
SEDIMENT CONTROL MEASURES

(Photo Credit: USDA, NRCS)

INLET PROTECTION ..... (1 - 8)
CONSTRUCTION ENTRANCES ..... (1 - 4)
TEMPORARY SEDIMENT BASINS ..... (1 - 24)
TEMPORARY SEDIMENT TRAPS ..... (1 - 6)
TEMPORARY STREAM CROSSINGS ..... (1 - 2)
COMPOST FILTER BERMS ..... (1 - 3)
SILT FENCE ..... (1 - 6)
STRAW WATTLES, COMPOST TUBES AND FIBER ROLLS ..... (1 - 6)
STRAW BALE ..... (1 - 4)
TURBIDITY CURTAINS ..... (1 - 2)
CONTAINMENT AREAS FOR EARTH MATERIALS ..... (1 - 3)
PORTABLE SEDIMENT TANKS AND BAGS ..... (1 - 4)
PUMPING SETTLING BASINS ..... (1 - 3)
PUMP INTAKE PROTECTION ..... (1 - 3)

Inlet Protection

(Photo Credit: RI DOT)

Definition

- A temporary, somewhat permeable barrier, installed around inlets in the form of a fence, berm or excavation around an opening, trapping and filtering water and thereby reducing the sediment content of sediment laden water by settling.
- "External inlet protection" products install in or around storm grates. External inlet protection devices are usually fitted to the size of the manhole grate structure. These devices capture sediment before it enters the manhole.
- "Internal inlet protection" products install inside the manhole structure. Internal inlet filters capture sediment after it enters the manhole structure.

Purpose

- To prevent unwanted sediment from entering storm drains and waterways.
- To assist in keeping storm drains and adjacent water ways as sediment free as possible.

Applicability

- All storm drains on any active jobsite should be protected by an inlet protection device. This holds true for storm drains installed in gravel parking lots.
- This measure shall be used where the drainage area to an inlet is disturbed, it is not possible to temporarily divert the storm drain outfall into a trapping device, and watertight blocking of inlets is not advisable.
- It is <u>not</u> to be used in place of sediment trapping devices.
- This may be used in conjunction with storm drain diversion to help prevent siltation of pipes installed with low slope angle.

<u>Note</u>: Many devices and materials can be reused.

Planning and Design Requirements

General Notes

- Be sure that a plan is in place to protect all stormwater inlets on the site.
- Internal and external products are often used in conjunction with each other.
- Since manufactured inlet protection devices are many and varied, designers should study their options closely.
- Be sure to match the sediment removal capabilities of the chosen systems with specific jobsite requirements.

Types of Storm Drain Inlet Measures

There are many different types of storm drain inlet protection measures that vary according to their function, location, drainage area, and availability of materials:

- Excavated Drop Inlet Protection
- Fabric Drop Inlet Protection
- Stone & Block Drop Inlet Protection
- Curb Drop Inlet Protection
- Manufactured external inlet protection devices
- Manufactured internal inlet filters

Design Criteria

General

- The drainage area for storm drain inlets shall not exceed one acre.
- The crest elevations of these measures shall provide storage and minimize bypass flow.

Excavated Drop Inlet Protection (Figure 1)

- Excavated side slopes shall be no steeper than 2:1.
- The minimum depth shall be 1 foot and the maximum depth 2 feet as measured from the crest of the inlet structure.
- Shape the excavated basin to fit conditions with the longest dimension oriented toward the longest inflow area to provide maximum trap efficiency.
- The capacity of the excavated basin should be established to contain 900 cubic feet per acre of disturbed area.

Figure 1. Excavated Drop Inlet Protection

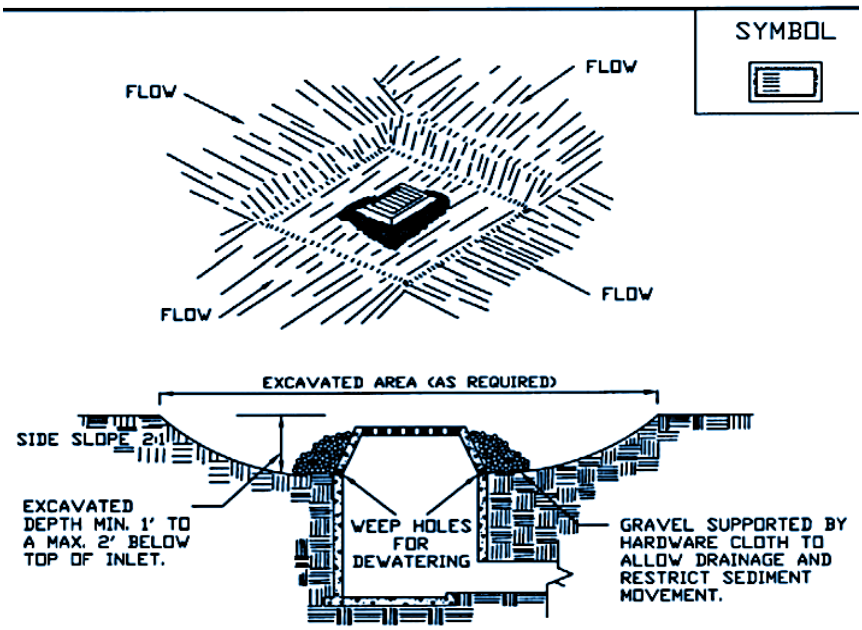

(Credit: NY State Standards and Specifications for Erosion and Sediment Control, 2005)

Fabric Drop Inlet Protection (Figure 2)

- Land area slope immediately surrounding this device should not exceed 1 percent.
- The maximum height of the fabric above the inlet crest shall not exceed 1.5 feet unless reinforced.
- The top of the barrier should be maintained to allow overflow to drop into the drop inlet and not bypass the inlet to unprotected lower areas.
- Support stakes for fabric shall be a minimum of 3 feet long, spaced a maximum 3 feet apart. They should be driven close to the inlet so any overflow drops into the inlet and not on the unprotected soil.
- Improved performance and sediment storage volume can be obtained by excavating the area.

Figure 2. Filter Fabric Drop Inlet Protection

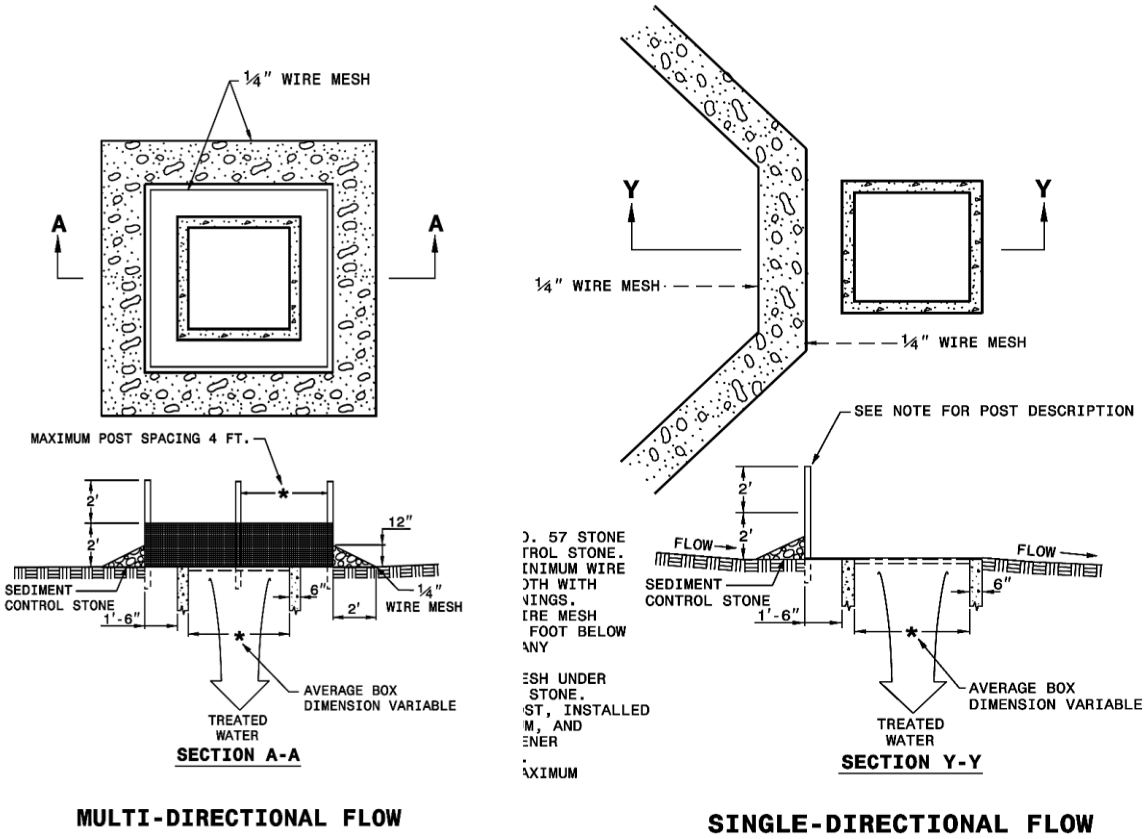

(Credit: NY State Standards and Specifications for Erosion and Sediment Control, 2005)

Stone and Block Drop Inlet Protection (Figure 3)

- The stone barrier should have a minimum height of 1 foot and a maximum height of 2 feet. Do not use mortar. The height should be limited to prevent excess ponding and bypass flow.
- As an optional design, the concrete blocks may be omitted and the entire structure constructed of stone, ringing the outlet ("doughnut").

Figure 3. Stone and Block Drop Protection

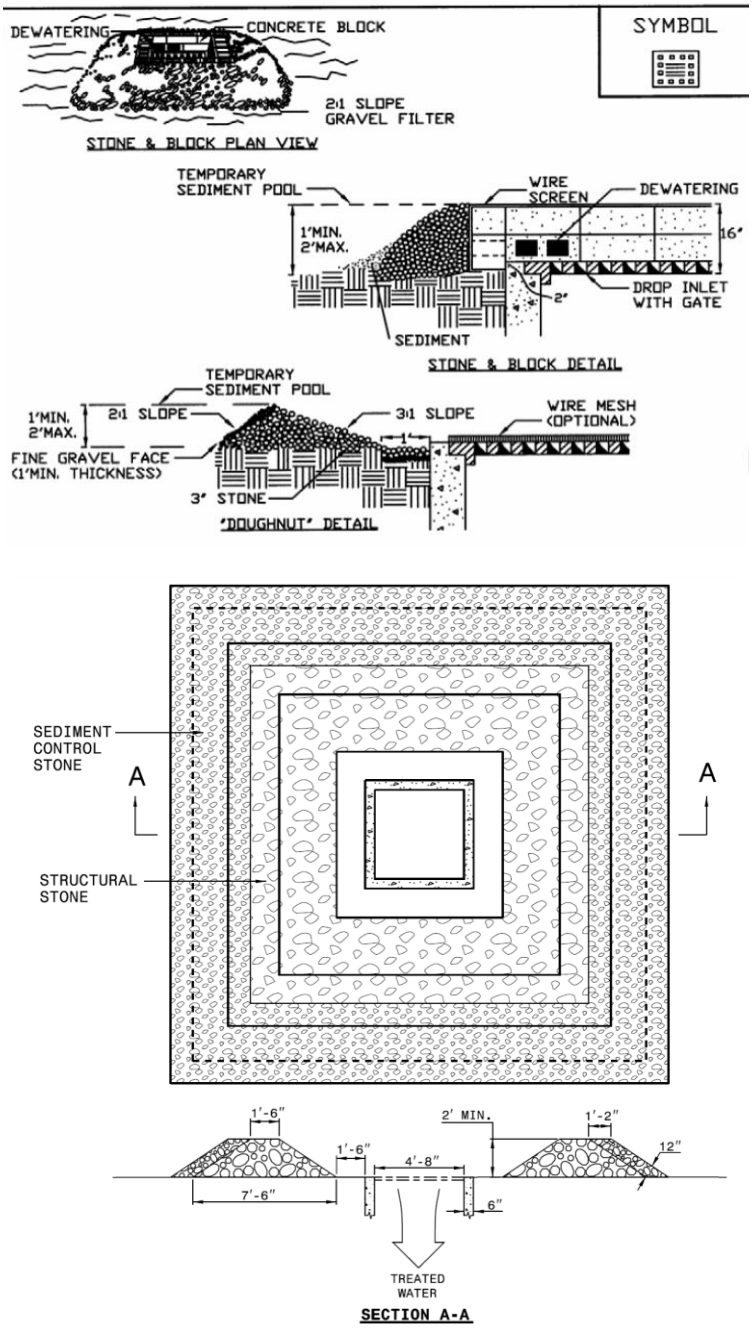

(Credit: NY State Standards and Specifications for Erosion and Sediment Control, 2005)

Curb Drop Inlet Protection (Figure 4)

- The wire mesh must be of sufficient strength to support the filter fabric and stone with the water fully impounded against it. Stone is to be 2 inches in size and clean. The filter fabric must be of a type approved for this purpose with an equivalent opening size (EOS) of 40-85. The protective structure will be constructed to extend beyond the inlet 2 feet in both directions.

- Traffic safety shall be integrated with the use of this measure.

Figure 4. Curb Drop Inlet Protection

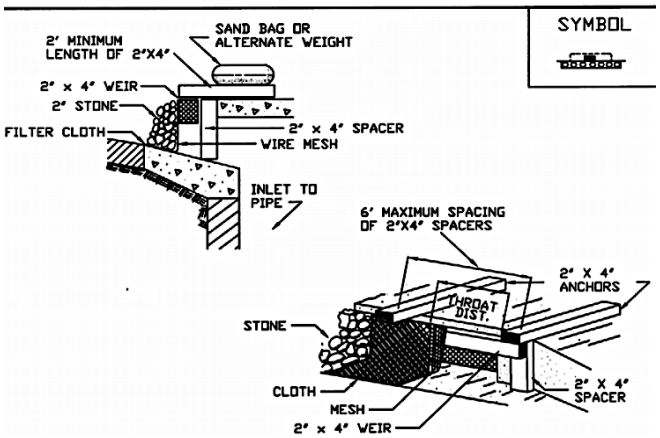

(Credit: NY State Standards and Specifications for Erosion and Sediment Control, 2005)

Manufactured Inlet Filters (Figure 5)

- External devices include filter bags that encase the drain grate. These devices are fitted to the specific drainage opening size. Raised or pop up filter devices are likewise manufactured to custom fit over various drainage opening sizes.
- Internal manufactured inlet filters are also fitted to the specific drain opening size. These devices are placed inside the drainage structure and under the drain grate. They can be composed of a metal frame and filter bag, while other devices are manufactured using fabric only.

Figure 5. Inlet Filter

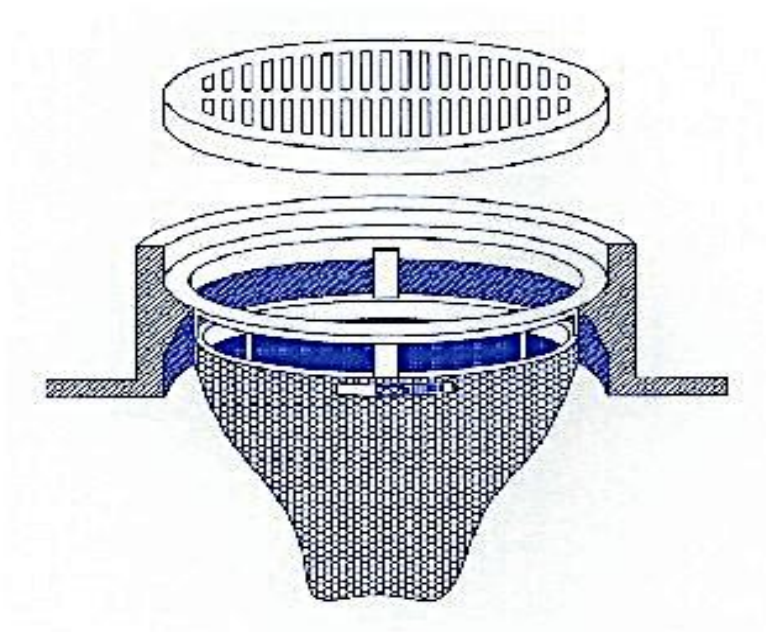

(Credit: NY State Standards and Specifications for Erosion and Sediment Control, 2005)

Installation Requirements

Excavated Drop Inlet Protection

- Shape the excavated basin to fit conditions with the longest dimension oriented toward the longest inflow area to provide maximum trap efficiency.
- Weep holes, protected by fabric and stone, should be provided for draining the temporary pool.

Fabric Drop Inlet Protection

- If straw bales are used in lieu of filter fabric, they should be placed tight with the cut edge adhering to the ground at least three (3) inches below the elevation of the drop inlet. Two anchor stakes per bale shall be driven flush to bale surface.

Stone and Block Drop Inlet Protection

- Recess the first course of blocks at least 2 inches below the crest opening of the storm drain for lateral support. Subsequent courses can be supported laterally if needed by placing a 2x4 inch wood stud through the block openings perpendicular to the course. The bottom row should have a few blocks oriented so flow can drain through the block to dewater the basin area.
- The stone should be placed just below the top of the blocks on slopes of 2:1 or flatter. Place hardware cloth of wire mesh with ½ inch openings over all block openings to hold stone in place.
- If concrete blocks are omitted and the entire structure constructed of stone, the stone should be kept at a 3:1 slope toward the inlet to keep it from being washed into the inlet. A level area one (1) foot wide and four (4) inches below the crest will further prevent wash. Stone on the slope toward the inlet should be at least three (3) inches in size for stability and one (1) inch or smaller away from the inlet to control flow rate. The elevation of the top of the stone crest must be maintained six (6) inches lower than the ground elevation down slope from the inlet to ensure that all storm flows pass over the stone into the storm drain and not past the structure. Temporary diking should be used as necessary to prevent bypass flow.

Curb Drop Inlet Protection

- Assure that storm flow does not bypass the inlet by installing temporary dikes (such as sand bags) directing flow into the inlet.
- Make sure that the overflow weir is stable.

Manufactured Inlet Filters

- Install manufactured inlet filter devices in accordance with manufacturer's written installation instructions.

Inspection, Maintenance, and Removal Requirements

- Inspect and maintain inlet protection devices are every rain event and/or weekly as required.
- Dispose of sediment properly.
- Remove all inlet protection devices within 30 days of permanent site stabilization.

Excavated Drop Inlet Protection

- Inspect and clean the excavated basin after every storm.
- Sediment should be removed when 50 percent of the storage volume is achieved. This material should be incorporated into the site in a stabilized manner.

Fabric Drop Inlet Protection

- Inspect the fabric barrier after each rain event and make repairs as needed.
- Remove sediment from the pool area as necessary with care not to undercut or damage the filter fabric.
- Upon stabilization of the drainage area, remove all materials and unstable sediment and dispose of properly. Bring the adjacent area of the drop inlet to grade, smooth and compact and stabilize in the appropriate manner to the site.
- If straw bales are used in lieu of filter fabric, straw bales will be replaced every 4 months until the area is stabilized.

Stone and Block Drop Inlet Protection

- The barrier should be inspected after each rain event and repairs made where needed.
- Remove sediment as necessary to provide for accurate storage volume for subsequent rains.
- Upon stabilization of contributing drainage area, remove all materials and any unstable soil and dispose of properly. Bring the disturbed area to proper grade, smooth, compact and stabilized in a manner appropriate to the site.

Curb Drop Inlet Protection

- The structure should be inspected after every storm event.
- Any sediment should be removed and disposed of on the site.
- Any stone missing should be replaced.
- Check materials for proper anchorage and secure as necessary.

Manufactured Inlet Filters

- Inspect after each rain event.
- Inspect external devices for damage and clean as necessary.
- Lift internal inlet filters carefully from the drainage structure. Remove any accumulated sediment and reinsert device into the drain opening.
- Remove all accumulated sediment and dispose of properly.

Construction Entrances

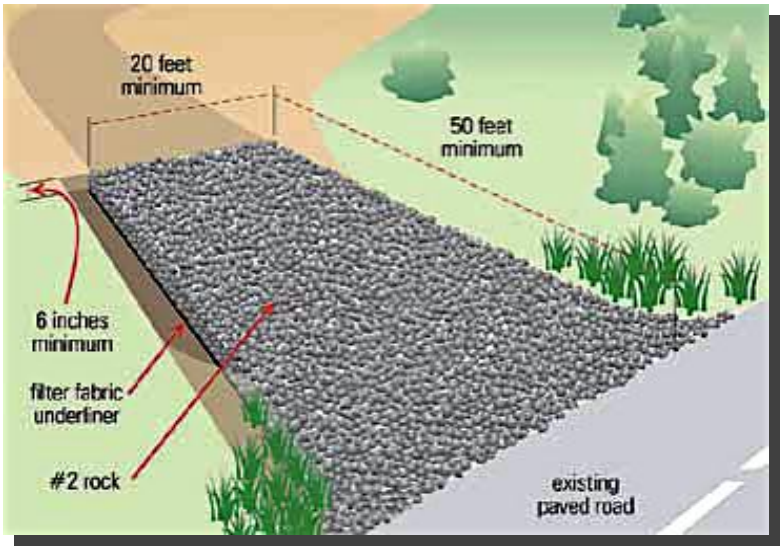

(Photo Credit: MACC)

Definition

- A stone stabilized pad, “mud rack”, automotive spray, or other measures located at points of vehicular ingress and egress on a construction site.

Purpose

- The purpose of a stabilized construction entrance is to reduce the tracking or flowing of sediment onto adjacent areas and paved surfaces. A properly established construction entrance provides an area where earth and other foreign materials can be removed from construction vehicle tires before they enter a public road.

Applicability

- Any point of construction ingress or egress where sediment may be tracked or flow off the construction site.

Planning and Design Requirements

Preliminary Actions

Construction entrances should be used in conjunction with the stabilization of construction roads to reduce the amount of earth and other foreign material picked up by construction vehicles.

At poorly drained locations, subsurface drainage should be installed before installing the stabilized construction entrance.

Location

The entrance should be located to provide for maximum utility by all construction vehicles. Avoid poorly drained soils, where possible.

Entrance Dimensions

- Thickness: not less than four (4) inches.
- Width: not less than full width of points of ingress or egress.

- Length: 50 feet minimum where the soils are sands or gravels or 100 feet minimum where soils are clays or silts, except where the traveled length is less than 50 or 100 feet, respectively.

Material Requirements

- Aggregate Size: Use ASTM C-33, size No. 2 or 3, or RIDOT 2" size crushed stone or gravel. Gradations are shown in **Figure 1.**

Figure 1. Materials Size

Square Mesh Sieves	RIDOT 2" Crushed Stone or Gravel *% Finer*	ASTM C-33 No. 2 *% Finer*	ASTM C-33 No. 3 *% Finer*
2-1/2 inches	100	90-100	100
2 inches	95-100	35-70	90-100
1-1/2 inches	30-55	0-15	35-70
1-1/4 inches	0-25	-	-
1 inch	0-5	-	0-15
3/4 inch	-	0-5	-
1/2 inch	-	-	0-5
3/8 inch	-	-	-

(Credit: *2002 Connecticut Guidelines for Soil Erosion and Sediment Control*)

- Geotextile: Fibers used in the geotextile shall consist of synthetic polymers composed of at least 85% by weight polypropylenes, polyesters, polyamides, polyethylene, polyolefins or polyvinylidene-chlorides. The fibers shall be formed into a stable network of filaments or yarns retaining dimensional stability relative to each other. The geotextile used shall be specifically intended for "road stabilization" applications and shall be consistent with the manufacturer's recommendations for the intended use.

Vehicle Washing May Be Required

If conditions on the site are such that the majority of the earth and other foreign material is not removed by the vehicles traveling over the gravel, then the tires of the vehicles must be washed before entering a public road. If washing is used, provisions must be made to intercept the wash water and trap the sediment before it is carried off-site. Wash water must be carried away from the entrance and must be treated in a sediment basin or alternative control that provide equivalent or better treatment prior to discharge. The settling area must be sized to hold the volume of water used during any 2-hour period. A wash rack may also be used to make washing more convenient and effective.

Installation Requirements

- At poorly drained locations install subsurface drainage insuring the outlet to the drains are free flowing.
- The area of the entrance should be cleared of all vegetation, roots, and other objectionable material.
- A road stabilization filter cloth must be placed on the subgrade prior to the gravel

placement to prevent pumping of soil through the aggregate. Unroll the geotextile in a direction parallel to the roadway centerline in a loose manner permitting it to conform to the surface irregularities when the stone is placed.

- Place the stone to the specified dimensions. Keep additional stone available or stockpile for future use. If the grade of the construction entrance drains to the paved surface and it exceeds 2%, construct a water bar within the construction entrance at least 15 feet from its entrance on the paved surface diverting runoff water to a settling or filtering area.
- Construct any drainage and settling facilities for washing operations. If wash racks are used, install according to the manufacturer's specifications. See **Figure 2.**

Figure 2. Construction Entrance (plan view and details)

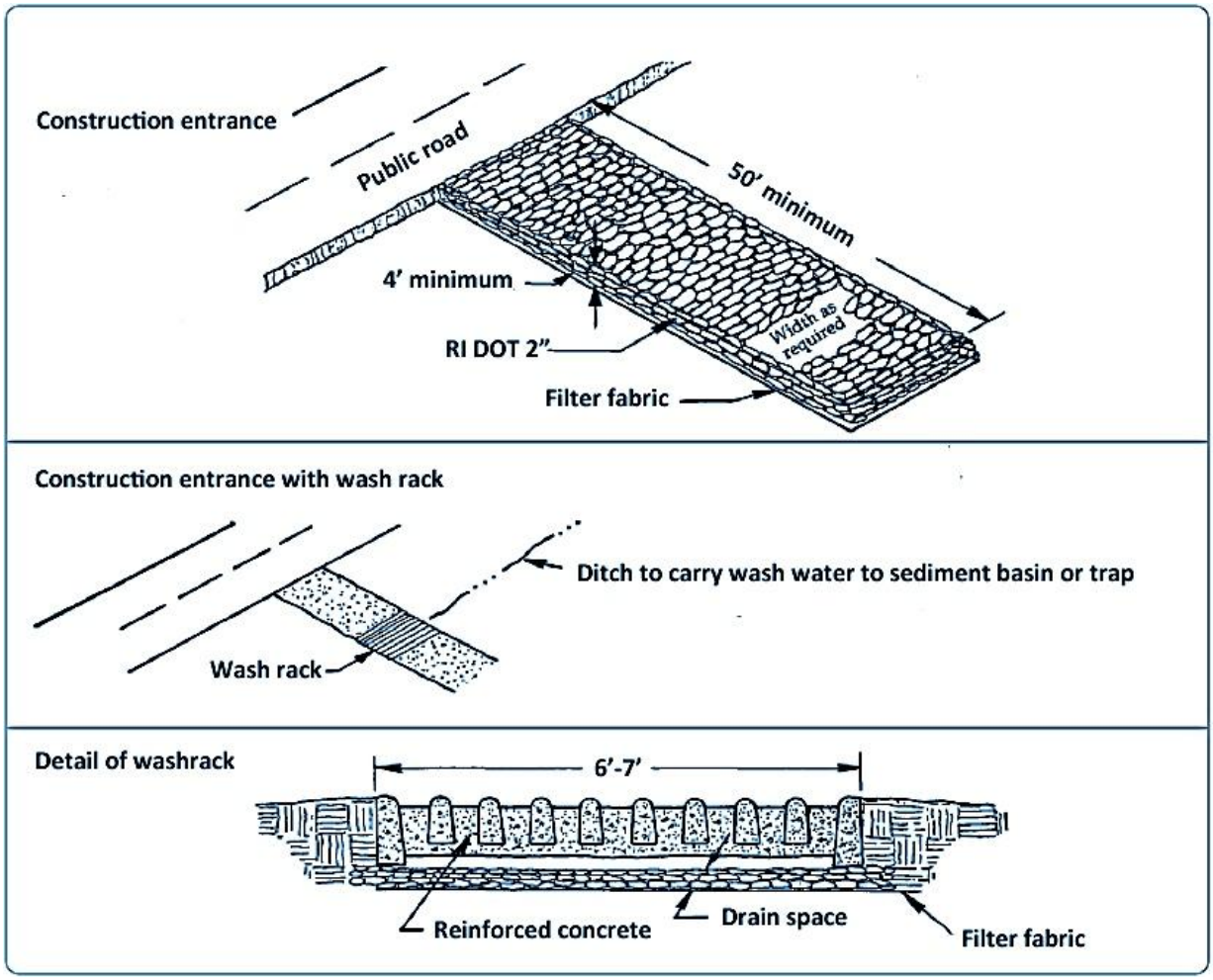

(Credit: *2002 Connecticut Guidelines for Soil Erosion and Sediment Control*)

Inspection, Maintenance, and Removal Requirements

- The entrance shall be maintained in a condition which will prevent tracking or flowing of sediment onto paved surfaces. Provide periodic top dressing with additional stone or additional length as conditions demand. Repair any measures used to trap sediment as needed. Immediately remove all sediment spilled, dropped, washed or tracked onto paved surfaces. Roads adjacent to a construction site shall be left clean at the end of each day.

- If the construction entrance is being properly maintained and the action of a vehicle traveling over the stone pad is not sufficient to remove the majority of the sediment, then either: (1) increase the length of the construction entrance, (2) modify the construction access road surface, or (3) install washing racks and associated settling area or similar devices before the vehicle enters a paved surface.
- Roads adjacent to a construction site shall be clean at the end of each day.
- At the completion of construction all entrance and exit points to the site must be restored in accordance with the approved plans.

Temporary Sediment Basins

(Photo Credit: US EPA)

Definition

- A temporary dam, excavated pit or dugout pond constructed across a waterway or at another suitable location, with a controlled outlet(s) such that a combination of wet and dry storage areas are created.
- A basin that is created by the construction of a dam is classified as an embankment sediment basin. A basin that is constructed by excavation is an excavated sediment basin. A basin that is created by a combination of dam construction and excavation is classified as an embankment sediment basin when the depth of water impounded against the embankment at emergency spillway elevation is three (3) feet or more.

Purpose

- To intercept and retain sediment during construction so as to prevent undesirable deposition of sediment in wetlands, surface waters, on bottom lands and developed areas.
- To reduce or abate water pollution.
- To preserve the capacity of reservoirs, ditches, canals, diversions, storm sewers, waterways, and streams.

Applicability

- Below disturbed areas with a contributing drainage area less than 100 acres. For drainage areas less than five acres, a **Temporary Sediment Trap**may be used.
- Only for locations where failure of the temporary sediment basin will not, within reasonable expectations, result in loss of life or damage to buildings, roads, railroads or utilities.
- This may be used in conjunction with storm drain diversion to help prevent siltation of pipes installed with low slope angle.
- Not for use as a post-construction stormwater treatment system.

Note: Many devices and materials can be reused.
Note: This structural measure must be specified and designed by a Professional Engineer.

Planning Considerations

Planning

- The preferred method of sediment control is to prevent erosion and control it near the source, rather than constructing sediment basins which only trap a portion of the sediments. However, where physical conditions, land ownership, or construction operations preclude erosion control measures, a temporary sediment basin may offer the most practical solution.
- Sequence construction so that the basin is located in an area that won't be developed until after the contributing watershed is stabilized and where it won't interfere with other construction activities or installation of utilities.
- Regardless of the construction sequence and location, plan to provide and maintain construction equipment access for the removal of accumulated sediment.
- To minimize the size of the temporary sediment basin, plan to divert clean water around the basin, intercept runoff from disturbed areas only, and design the basin to avoid collecting water from wetlands.

Permitting

- Contact the RIDEM Office of Water Resources Freshwater Wetlands Permitting Program early in the planning process to determine the potential need for a permit for the construction of a dam or for the purposes of diverting water. A Freshwater Wetlands permit may be required if the temporary sediment basin is proposed adjacent to a wetland and/or watercourse area. Additional permit requirements may apply if the proposed work will occur within floodplain and wetlands buffer areas.
- Design the sediment basin to be compatible with the floodplain management and stormwater management programs of the local jurisdiction and with local regulations for controlling sediment, erosion and runoff.
- Impoundments constructed with dams of 6 feet in height or more, or a capacity of 15 acre-feet or more, or that is a significant hazard or high hazard dam may require permitting in accordance with the RIDEM Dam Safety Program and the rules and regulations for Dam Safety.

Design Criteria

Location

The basin should be located:

- To intercept only runoff from disturbed areas and minimize interference with other construction activities and construction of utilities;
- To minimize disturbance from its own construction.
- To maximize the storage obtained from existing terrain, thereby minimizing dam height and the necessity for new disturbance from construction of the basin.
- To allow for ease of cleanout of the trapped sediment.
- Outside of surface waters and any natural buffers established in accordance with

Minimizing Disturbed Area: Preserving Soils & Vegetation and **Protecting Vegetated Buffers.**

- Outside extended detention basin or a stormwater treatment basin. Fine soil particles found in the sediments removed by the sediment basin will seal the underlying soils of the sediment basin and the future infiltration capacity of the soils may be significantly reduced.
- Where failure of the sediment basin would not, within reasonable expectations, result in loss of life, damage roads, railroads, homes, commercial and industrial properties or interrupt the use or service of utilities.

Please note: (A proposal to construct an impoundment having a dam six (6) feet in height or more, or a capacity of fifteen (15) acre-feet or more, or that is a significant or high-hazard dam may subject the owner to additional requirements in accordance with the RIDEM Dam Safety Program and the State of Rhode Island Department of Environmental Management Office of Compliance and Inspection – Rules and Regulations for Dam Safety.)

Size

The effective height of the dam for an embankment temporary sediment basin should be 15 feet or less. Dam safety height is defined as the vertical distance from the elevation of the uppermost surface of a dam to the lowest part of natural ground, including any stream channel, along the downstream toe of the dam.

The product of the storage volume (acre-feet in the reservoir below the elevation of the crest of the emergency spillway) and the effective height of the dam (as defined above) should be less than 3,000.

General

- Where feasible, outlet structures must be utilized that withdraw water from the surface of the basin to minimize the discharge of pollutants. Exceptions may include areas with extended cold weather, where alternate outlets are required during frozen periods. See section entitled Dewatering Device Design below for more details.
- Prevent erosion of: (1) the sediment basin by using stabilizing controls (e.g., erosion control blankets and or temporary vegetation) where practical; and (2) the inlet and outlet by using erosion controls and velocity dissipation devices.

Emergency Spillway

An emergency spillway shall be provided on all embankment sediment basins with a contributing drainage area equal to or greater than 20 acres.

Basin Capacity

The volume in the sediment basin below the crest elevation of the emergency spillway shall be at least that required for wet storage (which includes sediment storage) plus that required for residence storage. See **Figure 1.**

Figure 1. Sediment Basin Cross-Section

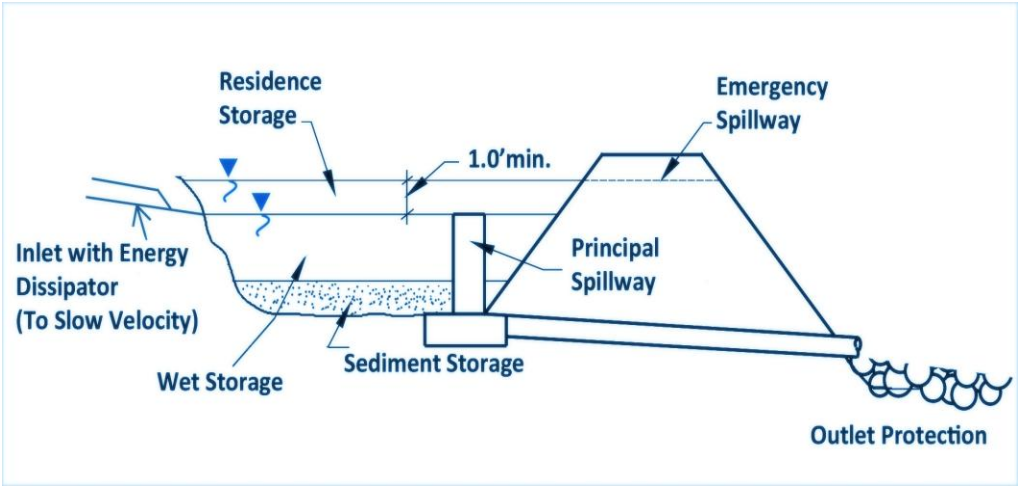

(Credit: Chuck Eaton)

Wet storage volume is the volume in the basin that is located below the invert of the lowest outlet structure for the basin. The wet storage may not provide permanent ponding of water depending on site conditions but will create a permanent pool for settling suspended sediment during a runoff event. The wet storage is intended to minimize the re-suspension of existing trapped sediments during a runoff event. To reduce sediment removal frequency, increase the volume of wet storage to increase the sediment storage volume. The volume of the wet storage shall be at least twice the volume of the sediment storage volume (see below) and shall be designed to a minimum depth of two (2) feet.

Sediment storage volume must accommodate at least one (1) year of predicted sediment load, regardless of the planned frequency of sediment removal. For the purpose of determining the sediment storage volume, use 80% trap efficiency Sediment Storage Requirements for Reservoirs Technical Release No. 12 by the USDA, NRCS may be used to provide a more refined estimate of the actual trap efficiency of a specific sediment basin. (Note: Trap efficiency is the amount (expressed as a percent) of the total sediment delivered to the basin that will remain in the sediment basin. It is a function of residence time, characteristics of the sediment, nature and properties of inflow, and other factors.) Sediment volume is calculated from the following formula:

$$V = [(DA)(A)(DR)(TE)(2{,}000\text{lbs./ton})] \div [(\gamma)(43{,}560\text{sq.ft./ac})]$$

where:

V = the volume of sediment trapped in ac. ft./yr.

DA = the total drainage area in acres

A = the average annual erosion in tons per acre per year using either values from the Universal Soil Loss Equation, the Revised Universal Soil Loss Equation or the values in **Figure 2** for the listed land use.

DR = the delivery ratio determined from **Figure 3**.

TE = Sediment Trap Efficiency (example: if trap efficiency is 80%, TE = 0.8)

γ= the estimated sediment density in the sediment basin in lbs/cu. ft. (from **Figure 4**).

Figure 2. Determining Erosion Rates

Land Use	Ave. Annual Erosion
Wooded area	0.2 ton/ac/yr
Developed urban areas, grassed areas, pastures, hay fields, abandoned fields with good cover	1.0 ton/ac/yr
Clean tilled cropland (corn, vegetables, etc.)	10 ton/ac/yr
Construction areas	50 ton/ac/yr

(Credit: *2002 Connecticut Guidelines for Soil Erosion and Sediment Control*)

Figure 3. Sediment Delivery Ratio vs. Drainage Area Graph

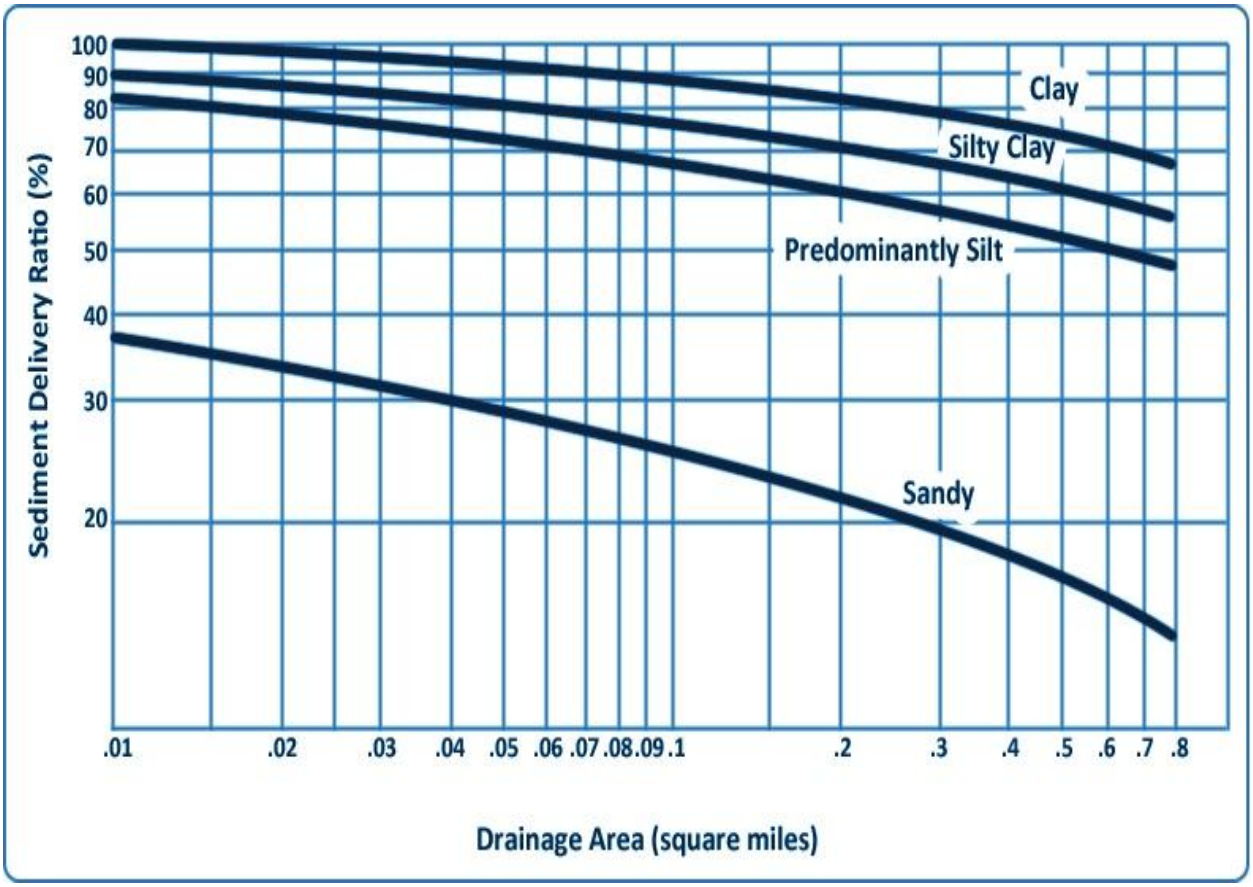

(Credit**:** *2002 Connecticut Guidelines for Soil Erosion and Sediment Control*)

Figure 4. Estimated Sediment Density

Soil Texture*	Sediment Density (Submerged) (lbs/cu. ft.)
Clay	40-60
Silt	55-75
Clay-silt mixtures (equal parts)	40-65
Sand-silt mixtures (equal parts)	75-95
Clay-silt sand mixtures (equal parts)	50-80
Sand	85-100
Gravel	85-125
Poorly sorted sand and gravel	95-130

*Use USDA soil data from country soil surveys or sieve analysis to determine soil texture.

(Credit:*2002 Connecticut Guidelines for Soil Erosion and Sediment Control*)

Residence Storage is adequate volume to provide a minimum 10 hours residence time for a 10-year frequency, 24-hour duration. Type III distribution storm. Residence time is defined as the volume weighted average time that an amount of flow will reside in a reservoir.

Flood routing is required to determine residence storage time. TR-55, or other generally accepted flood routing methods, will provide the minimum required residence storage volume and the maximum allowable principal spillway discharge.

Basin Shape: Depth, Width, and Effective Flow Length

The length, width, and depth of the basin are measured from the emergency spillway crest elevation.

The average depth shall be 4 feet or greater.

The minimum width shall be:

$W = 10\ (Q_5)^{1/2}$

where: W = width in feet

Q_5 = peak discharge from a 5-year frequency storm in cfs.

When the downstream area is highly sensitive to sediment impacts, the minimum width shall be:

$W = 10\ (Q_{25})^{1/2}$

where: W = width in feet

Q_{25} = peak discharge from a 25-year frequency storm in cfs.

The effective flow length shall be equal to at least two times the effective flow width. When site constraints prohibit the design of an adequate length, baffles are required to provide for the creation of an adequate flow length (see **Figure 5a and 5b**).

Figure 5. Sediment Basin with Baffle Details

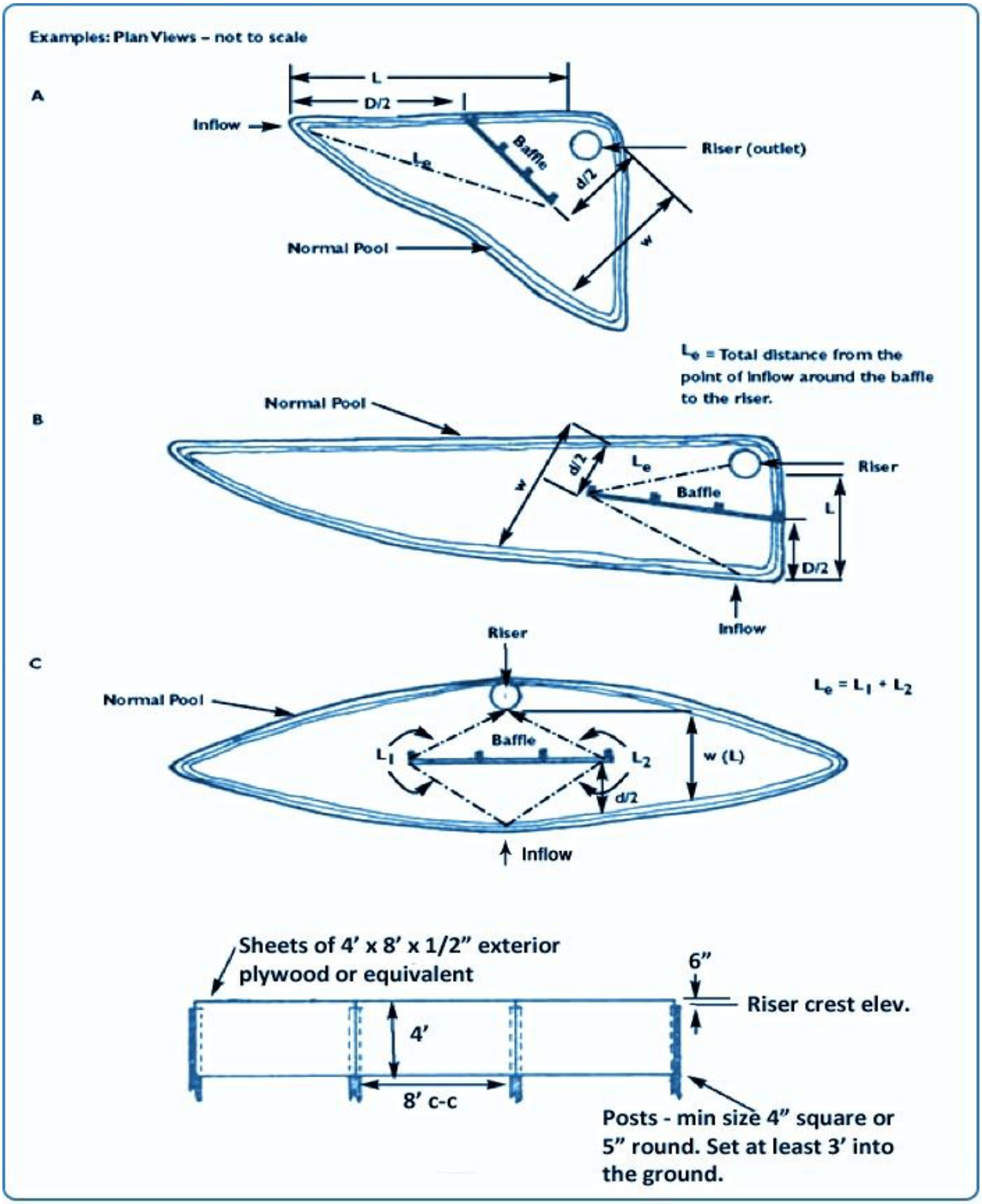

(Credit:*2002 Connecticut Guidelines for Soil Erosion and Sediment Control*)

Sediment Storage Markers

Detail the location and installation requirements for sediment storage stakes or other means of showing the threshold elevation for sediment cleanout.

Spillway/Outlet Design and Stabilization

The outlets for the basin shall consist of a combination of a principal spillway and emergency spillways. As an alternative, a structural spillway may be installed which combines the outflow requirements of a principal (primary) spillway and emergency (auxiliary) spillway.

These outlets must pass the peak runoff from the contributing drainage area for the design storm (see **Figure 42-6**). If, due to site conditions and basin geometry, a separate emergency spillway is not feasible, the principal spillway must pass the entire peak runoff expected from the design storm. However, an attempt to provide a separate emergency spillway should always be made (refer to the section entitled "Emergency Spillway", below). Runoff computations shall be based upon the soil cover conditions which are expected to prevail during the life of the basin or defult to bare ground conditions for "worse case senerio".. Refer to standard engineering measures for calculations of the peak rate of runoff. Note that the flow through the dewatering orifice cannot be utilized when calculating the design storm elevation because of its potential to become clogged; therefore, available spillway storage must begin at the principal spillway crest.

The embankment, emergency spillway, spoil and borrow areas, and other disturbed areas above normal water level shall be vegetatively stabilized in accordance with **Seeding for Permanent Vegetative Cover** or **Sodding**, or otherwise provided with a non-erodible surface.

Figure 6. Design Data

Drainage Area (acre)	Frequency (years)	Minimum Duration (hours)
Less than 50	25	24
50-100	100	24

(Credit: *2002 Connecticut Guidelines for Soil Erosion and Sediment Control*)

Principal Spillway

Riser and Barrel Design

For maximum effectiveness, the principal spillway should consist of a riser (a vertical pipe or box of corrugated metal, reinforced concrete, or plastic, with a minimum diameter of 15 inches), joined by a water-tight connection to a horizontal pipe (barrel) extending through the embankment and outletting beyond the downstream toe of the fill. The riser and barrel shall be placed on a firmly compacted soil foundation.

If the principal spillway is used in conjunction with a separate emergency spillway, then the principal spillway shall be designed to pass at least the peak flow expected from a 2-year storm. If no emergency spillway is used, the principal spillway shall be designed to pass the entire peak flow expected from the design storm.

Anchoring the Riser and Barrel Base

The base of the principal spillway shall be firmly anchored according to design criteria to prevent floatation. If the riser height of the spillway is greater than 10 feet, computations shall be made to

determine the anchoring requirements. A minimum factor of safety of 1.25 shall be used (downward forces = 1.25 x upward forces).

For risers 10 feet or less in height, the anchoring may be done in the two following way: A concrete base 18 inches thick and twice the width of the riser diameter shall be used and the riser shall be embedded six (6) inches into the concrete.

Barrel

The barrel of the principal spillway, which extends through the embankment, shall be designed to carry the flow provided by the riser of the principal spillway with the water level at the crest of the emergency spillway. The connection between the riser and the barrel shall be watertight. The outlet of the barrel shall be protected to prevent erosion or scour of downstream areas.

Riser and Barrel Materials

The pipe shall be capable of withstanding external loading without yielding, buckling, or cracking. The following pipe materials are acceptable:

- Corrugated Aluminum Pipe: The maximum principal spillway barrel size shall be 36 inches. The pipe shall be riveted fabrication. Inlets, coupling bands and anti-seep collars must be made of aluminum.

Fittings for aluminum pipe fabricated of metals other than aluminum or aluminized steel must be separated from the aluminum pipe at all points by at least two layers of plastic tape having a total thickness of at least 24 mils, or by other permanent insulating material that effectively prevents galvanic corrosion.

Bolts used to join aluminum and steel must be galvanized, plastic coated, or otherwise protected to prevent galvanic corrosion. Bolts used to join aluminum to aluminum, other than aluminum alloy bolts, must be galvanized, plastic coated, or otherwise protected to prevent galvanic corrosion.

Connections between pipe joints must be watertight. Flanges with gaskets or caulking may be used. Rod and lug coupling bands with gaskets or caulking may be used. Slip seam coupling bands with gaskets or caulking may be used.

- Plastic Pipe: PVC pipe shall meet the requirements of **Figure 7**. Connections between pipe joints and anti-seep collar connections to the pipe must be watertight. Pipe joints shall be solvent welded, O-ring, or threaded. All fittings and couplings shall meet or exceed the same strength requirements as that of the pipe and be made of material that is recommended for use with the pipe. Connections of plastic pipe to less flexible pipe or structures shall be designed to avoid stress concentrations that could rupture the plastic. The maximum principal spillway barrel size shall be 12 inches.
- Concrete, With Rubber Gasket Joints: The pipe shall be laid in concrete bedding. Connections between pipe joints and anti-seep collar connections to pipe shall be watertight and remain watertight after movement caused by foundation consolidation and embankment settlement.

Figure 7. PVC Pipe Requirements

Nominal Pipe Size (inches)	Strength	Maximum Depth or Fill Over Pipe (feet)
6, 8, 10, 12	Sched. 40	10
	Sched. 80	15
	SDR 26	10
*Polyvinyl chloride pipe, PVC 1120 or PVC 1220, conforming to ASTM D 1785 or ASTM D 2241		

(Credit: *2002 Connecticut Guidelines for Soil Erosion and Sediment Control*)

Inlets for Pipe Conduits

The inlet shall be structurally sound and made from materials compatible with the pipe. The inlet shall be designed to prevent floatation. The inlets shall be designed to function satisfactorily for the full range of flow and hydraulic head anticipated. The inlet materials shall be subject to the same limitations and requirements as pipe conduits.

- Watertight Riser: Risers shall be completely watertight except for the inlet.
- Pipe Drop Inlet: Pipe drop inlets, where designed for pressure flow, shall meet the following conditions:
  - The weir length shall be adequate to prime the pipe below the emergency spillway elevation.
  - For pipe on less than critical slope, the height of the drop inlet shall be at least 2 times the conduit diameter.
  - For pipe on a critical slope or steeper, the height of the drop inlet shall be at least 5 times the conduit diameter.

Outlets for Pipe Conduits

The outlets shall be structurally sound and made from materials compatible with the pipe. The outlets shall be designed to function satisfactorily for the full range of flow and hydraulic head anticipated. Protection against scour at the discharge end of the spillway shall be provided. Measures may include impact basins, Saint Anthony Falls outlets, riprap, excavated plunge pools or other generally accepted energy dissipaters.

Backfill

With the exception of filter diaphragms, pervious materials such as sand, gravel, or crushed stone shall not be used as backfill around the barrel or anti-seep collars (compact by hand if necessary). Fill material shall be placed around the pipe in 6-inch layers and compacted until 95% standard proctor compaction is achieved. A minimum of two feet of fill shall be hand-compacted over the barrel before crossing it with construction equipment.

Elevation

The crest of the principal spillway shall be set at the elevation corresponding to the storage volume required. If a principal spillway is used in conjunction with an emergency spillway, the principal spillway crest shall be a minimum of 1.0 foot below the crest of the emergency spillway. In addition, a minimum freeboard of 1.0 foot shall be provided between the design high water

elevation (design depth through the emergency spillway) and the top of the embankment. If no emergency spillway is used, the crest of the principal spillway shall be a minimum of 3 feet below the top of the embankment; in addition, a minimum freeboard of 2.0 feet shall be provided between the design high water and the top of the embankment.

Anti-Vortex Device and Trash Rack

Sediment basins with a riser-type principal spillway designed for pressure flow shall have adequate anti-vortex devices to improve the flow characteristics. See **Figure 8 and Figure 9**. An appropriate safety guard shall be installed at the inlet to prevent blockage due to floating debris and reduce the safety hazard to people. The guard shall be a type that will not plug with leaves, grass or other debris.

Figure 8. Anti-Vortex – Trash and Safety Guard Diagram

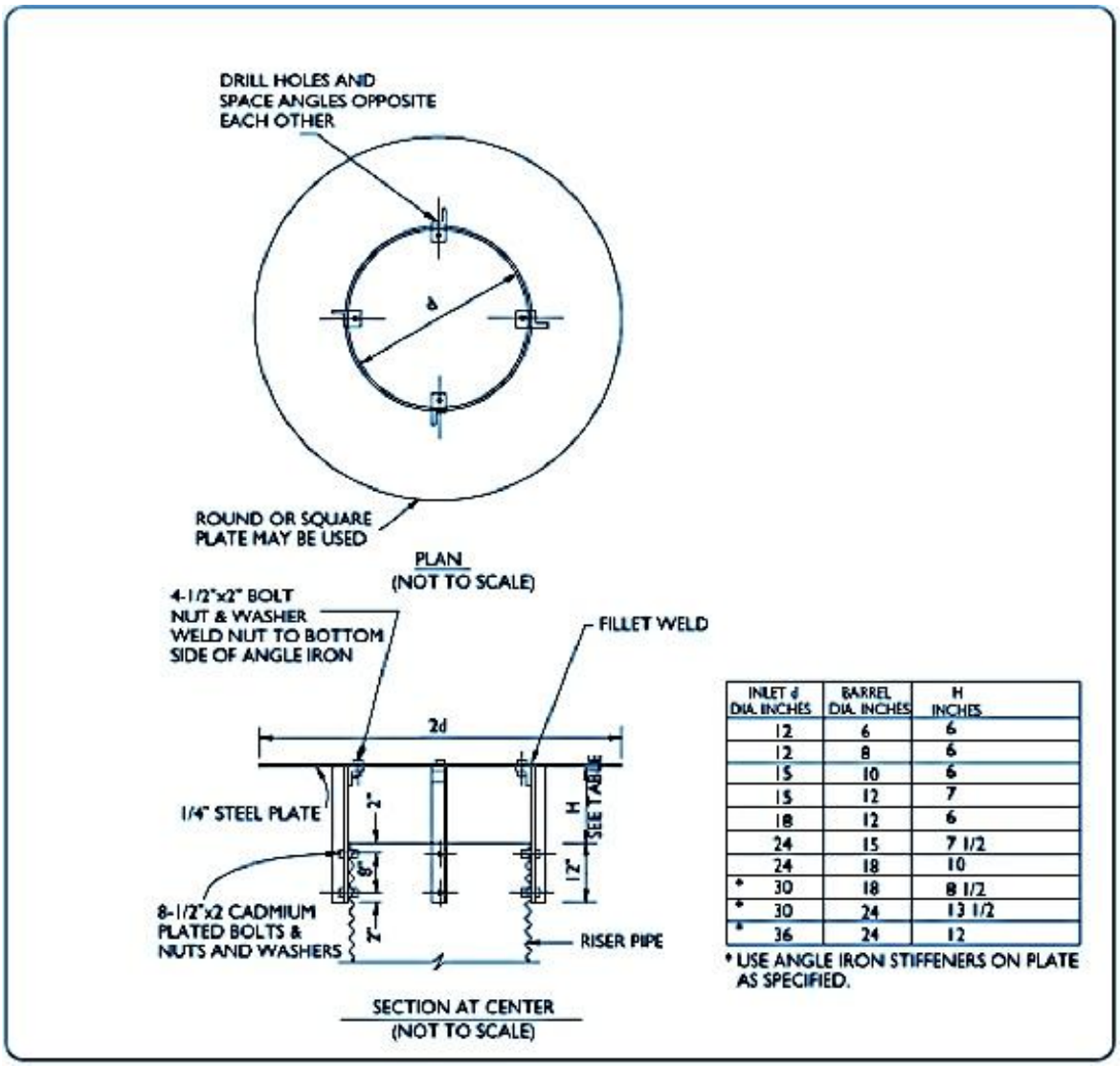

INLET d DIA. INCHES	BARREL DIA. INCHES	H INCHES
12	6	6
12	8	6
15	10	6
15	12	7
18	12	6
24	15	7 1/2
24	18	10
* 30	18	8 1/2
* 30	24	13 1/2
* 36	24	12

* USE ANGLE IRON STIFFENERS ON PLATE AS SPECIFIED.

(Credit: *2002 Connecticut Guidelines for Soil Erosion and Sediment Control*)

Figure 9. Concentric Trash Rack and Anti-Vortex Device

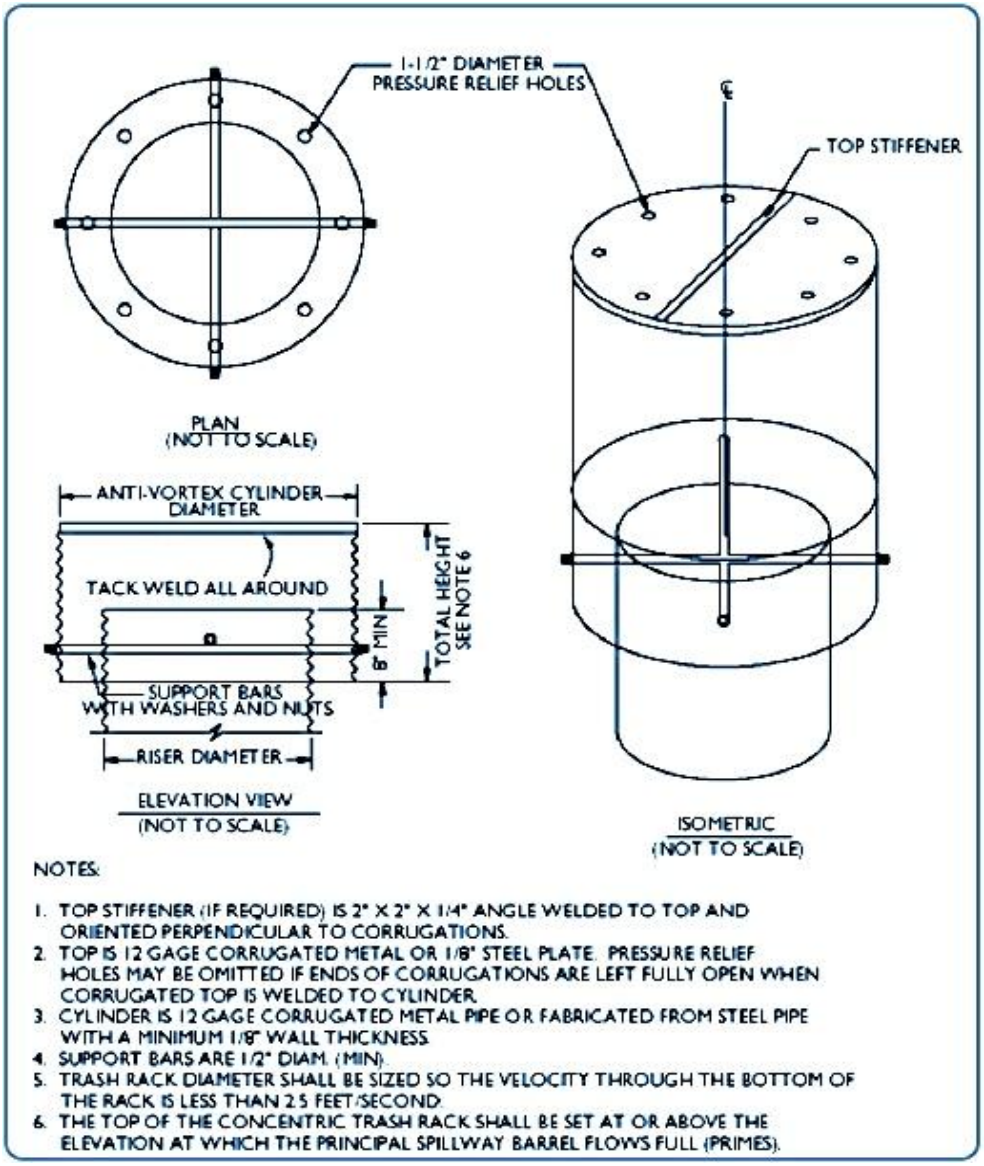

(Credit: *2002 Connecticut Guidelines for Soil Erosion and Sediment Control*)

Anti-Seep Collars

Anti-seep collars are designed to control seepage and piping along the barrel by increasing the flow length and thus making any flow along the barrel travel a longer distance.

Pipe conduits for embankment sediment basins shall be provided with anti-seep collars or filter diaphragms. The minimum number of anti-seep collars shall be determined by the size of the collars and the length of that part of the conduit lying in the saturated zone of earth embankment. Anti-seep collars are not required for excavated sediment basins.

Anti-seep collars shall be used along the barrel of the principal spillway within the normal saturation zone of the embankment to increase the seepage length by at least 10%, if either of the following two conditions is met.

- The settled height of the embankment exceeds 10 feet.

- The embankment has a low silt-clay content (Unified Soil Classes SM or GM based on sieve analysis, see **Appendix H, Soil Classification Systems**) and the barrel is greater than 10 inches in diameter.

Anti-seep collars shall be installed within the saturated zone.

The size and number of anti-seep collars is determined such that the ratio of the length of the line of seepage (L+ 2 n V) to L is to be not less than 1.15 where:

V = projection of the anti-seep collar in feet

L = length in feet of the conduit within the zone of saturation, measured from the downstream side of the riser to the toe drain or point where the phreatic line intercepts the conduit, whichever is shorter

n = number of anti-seep collars

Anti-seep collars should be equally spaced along that part of the barrel within the saturated zone. The maximum spacing between collars shall be 14 times the projection of the collars above the barrel and in no case shall exceed 25 feet. Collars shall not be closer than two (2) feet from a pipe joint. Collars should be placed sufficiently far apart to allow space for hauling and compacting equipment. Precautions should be taken to ensure 95% standard proctor compaction is achieved around the collars. Connections between the collars and the barrel shall be watertight. The collar material shall be compatible with pipe materials. See **Figure 10**.

Due to the constraints that collars impose on embankment fill placement and compaction, collars may sometimes be ineffective or actually result in an increase in seepage and piping.

Figure 10. Anti-Seep Collar

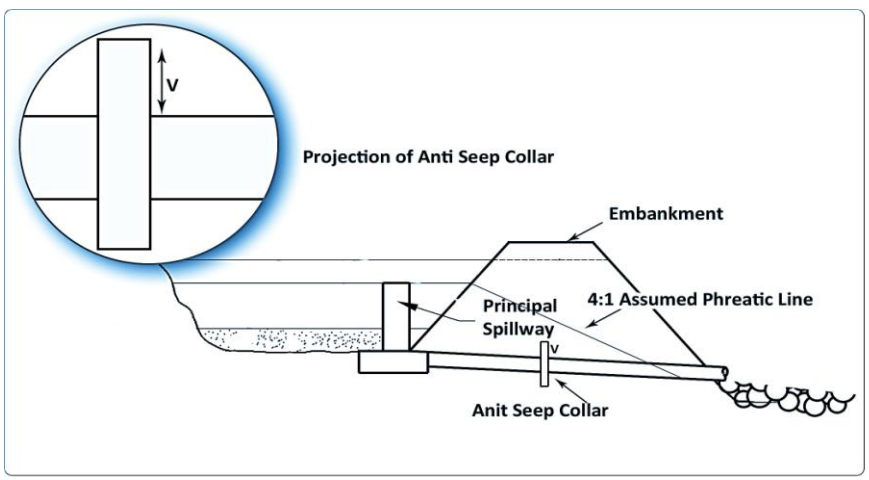

(Credit: Chuck Eaton)

Filter Diaphragms

Alternative measures to anti-seep collars have been developed and are being incorporated into embankment designs. These measures include a structure known as a “filter or drainage diaphragm’, which consists of a layer of sand and fine gravel running through the dam embankment perpendicular to the barrel. Typically, the structure is 4-5 inches in width, approximately one (1) foot in height, and is located at the barrel elevation at its intersection with the upper bounds of the seepage zone. The measure controls the transport of embankment fines, the major concern with piping and seepage. The diaphragm channels any undesirable flow through the fine-graded material, which traps any embankment material being transported. The flow is then conveyed out of the embankment through a drain.

The critical design element of the filter diaphragm is the grain-size distribution (gradation) of the filter material which is determined by the gradation of the adjacent embankment fill material. The use and design of these measures shall be based on site-specific geotechnical information and be supervised by a qualified professional.

Emergency Spillway

The emergency spillway acts as a safety release for a sediment basin, or any impoundment-type structure, by conveying the larger, less frequent storms through or around the basin without damage to the embankment. An attempt to provide a separate emergency spillway shall always be made. However, there shall be an emergency spillway on all temporary sediment basins with a contributing drainage equal to or exceeding 20 acres.

The emergency spillway shall consist of an open channel (earthen and vegetated) constructed adjacent to the embankment over undisturbed material (not fill). Where conditions will not allow the construction of an emergency spillway on undisturbed material, a spillway may be constructed of a non-erodible material such as riprap. Do not construct vegetative emergency spillways over fill material.

Design elevations, widths, entrance and exit channel slopes are critical to the successful operation of the spillway and should be adhered to closely during construction.

The spillway shall have a control section at least 20 feet in length. The control section is a level portion of the spillway channel at the highest elevation in the channel profile.

Where conditions require the construction of an emergency spillway on the embankment, a spillway shall be constructed of a non-erodible material such as riprap.

An evaluation of site and downstream conditions must be made to determine the feasibility and justification for the incorporation of an emergency spillway. In some cases, the site topography does not allow a spillway to be constructed in undisturbed material, and the temporary nature of the facility may not warrant the cost of disturbing more acreage to construct and armor a spillway. The principal spillway should then be sized to convey all the design storms.

Emergency Spillways for Excavated Sediment Basins

If the downstream slope is 5:1 or flatter and has existing vegetation or is immediately protected by sodding, riprap, asphalt lining, concrete lining, or other equally effective protection, then excavated sediment basins may utilize the natural ground for the emergency spillway. Otherwise, the spillway shall meet the capacity requirement for embankment sediment basins given below.

Emergency Spillways for Embankment Sediment Basins

Emergency spillways for embankment sediment basins shall meet the following requirements:

- Capacity: The minimum capacity of the emergency spillway shall be that required to pass the peak flow expected from a design storm of the frequency and duration shown in **Figure 42-6** less any reduction creditable to principal spillway discharge and detention storage.

If routed, the flood routing shall be done using the methods outlined in TR-55, or other generally accepted methods of emergency spillway flood routing. When discharge of conduit-type principal spillway system is considered in calculating outflow through the emergency spillway, the crest elevation of the inlet shall be such that full pipe flow will be generated in the conduit before there is discharge through the emergency spillway.

- Design Elevations: The design storm elevation through the emergency spillway shall be at least one (1) foot below the top of the embankment. The crest of the emergency spillway channel shall be at least one (1) foot above the crest of the principal spillway.

- Location: The emergency spillway channel shall be located so that it will not be constructed over fill material. The channel shall be located so as to avoid sharp turns or bends. The channel shall return the flow of water to a defined channel downstream from the embankment. If the emergency spillway can not be placed in an area that is not fill material, one option may be the consideration of a multi-staged flow structure that would include the emergency spillway design need.
- Spillway variables: Emergency spillways are to provide for passage of the design flow at a safe velocity to a point downstream where the embankment will not be endangered. The maximum permissible velocity in the exit channel shall be four (4) feet per second for vegetated channels in soils with a plasticity index of 10 or less and six (6) feet per second for vegetated channels in soils with a plasticity index greater than 10 (based on laboratory analysis). For exit channels with erosion protection other than vegetation, the velocities shall be non-erosive for the type of protection used.

The emergency spillway channel shall return the flow to the receiving channel at a non-eroding velocity.

- Cross Sections: Emergency spillways shall be trapezoidal and be located in undisturbed earth. The side slopes shall be 2:1 or flatter. The bottom width shall be a minimum of eight (8) feet. The embankment requirements shall determine elevation differences between the crest of the emergency spillway and the settled top of dam.
- Component Parts: Emergency spillways are open channels and consist of an inlet channel, control section and an exit channel. The emergency spillway shall be sufficiently long to provide protection from breaching.
- Inlet Channel: The inlet channel shall be level and straight for at least 20 feet upstream of the control section. Upstream from this level area it may be graded back towards the basin to provide drainage. The alignment of the inlet channel may be curved upstream from the straight portion.
- Exit Channel: The grade of the exit channel of a constructed spillway shall fall within the range established by discharge requirements and permissible velocities. The exit channel shall carry the design flow downstream to a point where the flow will not discharge onto the toe of the embankment. The design flow should be contained in the exit channel without the use of dikes. However, if a dike is necessary, it shall have 2:1 or flatter side slopes, a minimum top width of eight (8) feet, and be high enough to contain the design flow plus one (1) foot of freeboard.

Structural Spillways Other Than Pipe

Structural spillways other than pipe systems will have structural designs based on sound engineering data with acceptable soil and hydrostatic loadings as determined on an individual site basis.

When used as a principal spillway, structural spillways shall meet the flow requirements for principal spillways and shall not be damaged by the emergency spillway design storm. When used as a combination principal emergency spillway, it shall pass the storm runoff from the appropriate storm in **Figure 6**.

Embankment Design

Height and Cross-Section

The effective height of the dam is defined as the difference in elevation in feet between the emergency spillway crest and the lowest point in the cross section taken along the centerline of the dam. The effective height of the dam for an embankment detention basin is 15 feet or less. If

there is no emergency spillway, the top of the dam becomes the upper limit. Additional design guidance can be found in the US Department of Agriculture Natural Resources Conservation Service National Handbook of Conservation Measures, Measure Standard No. 378, May 2011. Sediment basins that exceed the above conditions shall be designed to meet the criteria in Technical Release No. 60 (TR-60) published by the US Department of Agriculture Natural Resources Conservation Service.

For embankments up to 14 feet in height, the minimum top width shall be 8 feet and the side slopes shall be 2-1/2:1 or flatter. For 15 foot high embankments (maximum allowed under this measure), the Department of Agriculture Natural Resources Conservation Service.

Site Preparation

Areas under the embankment and any structural works related to the basin shall be cleared, grubbed, and stripped of topsoil to remove trees, vegetation, roots, or other unsuitable material. In order to facilitate clean out and restoration, the area of most frequent inundation (measured from the top of the principal spillway) will be cleared of all brush and trees.

Foundation Cutoff

A foundation cutoff, constructed with relatively impermeable materials, shall be provided for all embankments. The cutoff trench shall be excavated along the centerline of the dam. The trench must extend at least two (2) feet into undisturbed foundation soils. The cutoff trench shall extend up both abutments to the emergency spillway crest elevation. The width shall be wide enough to permit operation of compaction equipment (four (4) feet minimum). The side slopes shall be no steeper than 1:1. Compaction requirements shall be the same as those for the embankment. The trench shall be kept free from standing water during the backfilling operations.

Seepage Control

Seepage control is to be included if seepage may create swamping downstream, if needed to ensure a stable embankment, or if special problems require drainage for a stable embankment. Seepage control may be accomplished by foundation, abutment or embankment drains, reservoir blanketing or a combination of these and other measures.

Foundation

The area on which an embankment is to be placed shall consist of material that has sufficient bearing strength to support the embankment without excessive consolidation.

Special Requirements for Earth Embankment Design

Freeboard

The minimum elevation of the top of the settled embankment shall be one (1) foot above the water surface in the reservoir with the emergency spillway flowing at design depth.

Materials

The fill material for the embankment shall be from approved borrow areas. It shall be clean mineral soil, free of roots, woody vegetation, stumps, sod, over-sized stones, rocks, man made materials, or other perishable or unsuitable material. The material selected must have enough strength for the dam to remain stable and be impervious enough, when properly compacted, to prevent excessive seepage through the dam. Impervious portions of the embankment shall consist of at least 15% clay or silt. Using the Unified Soil Classification System (see **Appendix H, Soil Classification Systems**), SC (clayey sand), GC (clayey gravel) and CL ("low liquid limit" clay) are among the preferred types of embankment soils. SM, ML and GM type soils may also be used. Fill material should be selected based on laboratory analysis.

Allowance for Settlement

The design height of the embankment shall be increased by the amount needed to ensure that, after all settlement and consolidation has taken place, the height of the dam will equal or exceed the design height. This increase shall not be less than 10% when compaction is by hauling equipment or 5% if controlled compaction is used, except where detailed soil testing and laboratory analysis shows that a lesser amount is adequate.

Compaction

Areas on which fill is to be placed shall be scarified prior to placement of fill. The fill material shall contain the proper amount of moisture to ensure that at least 90% – 95% standard proctor compaction will be achieved. Fill material will be placed in 9-inch continuous layers over the entire length of the fill. Compaction shall be obtained by routing the hauling equipment over the fill so that the entire surface of the fill is traversed by at least one wheel or tread track of the equipment, or by using a compactor. Special care shall be taken in compacting around the anti- seep collars and principal spillway system to avoid damage and achieve desired compaction (compact by hand, if necessary).

Dewatering Device Design

Introduction

Dewatering should be part of all sediment basins. Sediment basins must be dewatered using a device that discharges water from the top of the dewatering zone. The recommended minimum dewatering time for sediment basins is 48 hours. The maximum dewatering time should not exceed seven (7) days. The lower limit of dewatering is the top of the sediment storage zone, or the top of the permanent pool if a permanent pool is used. The upper limit is the crest of the principal spillway.

Typical methods or devices for accomplishing this may include the following: skimmers, floating pumps, siphons or other acceptable methods that provide dewatering between 48 hours and seven (7) days. Where ice or other reasons make dewatering from the top of the water surface impractical, multiple orifices or a single orifice may be used to dewater down to the top of the sediment storage zone. Any dewatering of the sediment zone must be accomplished using protected dewatering methods (e.g. perforated riser with gravel cone or wire mesh and filter fabric covering perforations). All of these methods are appropriate for meeting the requirements of this standard, but only sizing procedures for skimmers are included below. Concern regarding ice may justify changing outlet types during months of hardest freezing or provide frequent monitoring and maintenance as a means of preventing freezing of the skimmer.

Typically a single orifice plate is placed in the discharge pipe to control water outflow or discharge. It is recommended that the orifice be placed near the water surface or floating device to allow a constant head and a more consistent discharge. Note the dewatering device is not the same as the principal or emergency spillway. However, the dewatering device outlet may be connected to the principal spillway outlet as shown in **Figure 11**. A schematic of skimmers are shown in **Figures 12** and **13**.

Figure 11. Pool showing dewatering area and additional sediment storage area.

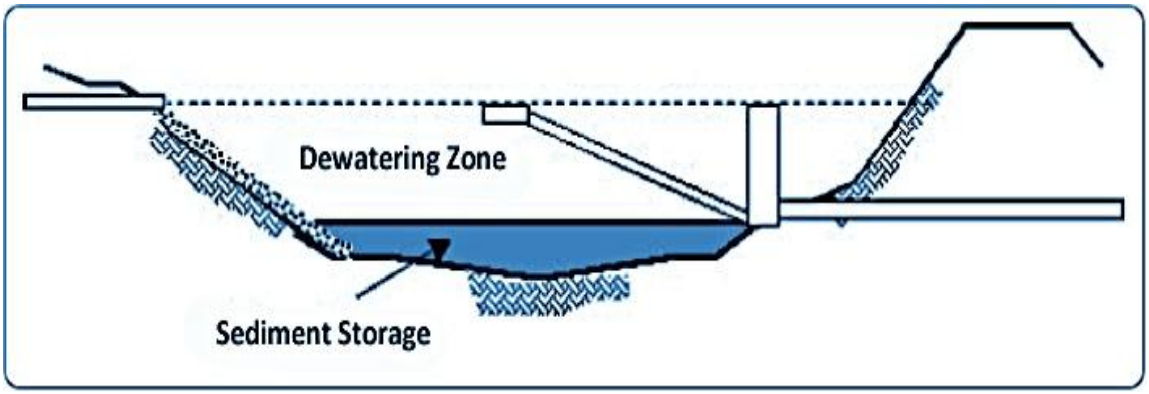

(Credit: *2002 Connecticut Guidelines for Soil Erosion and Sediment Control*)

Skimmer Options: Different Designs, Different Orifice Sizing Requirements

Two types of skimmer designs are discussed in this handbook:

- the Delaware DOT skimmer (**Figure 12**) incorporated into the State of Delaware Department of Transportation specifications, and
- the Faircloth Skimmer (**Figure 13**), a patented device manufactured and sold by William Faircloth of North Carolina.

The source of the Dewatering Device Design Parameters and Diagrams is the Ohio Department of Natural Resources, Division of Soil and Water Conservation, Rainwater and Land Development, Ohio's Standards for Stormwater Management Land Development and Urban Stream Protection, Third Edition 2006.

Figure 12. Delaware Department of Transportation Skimmer

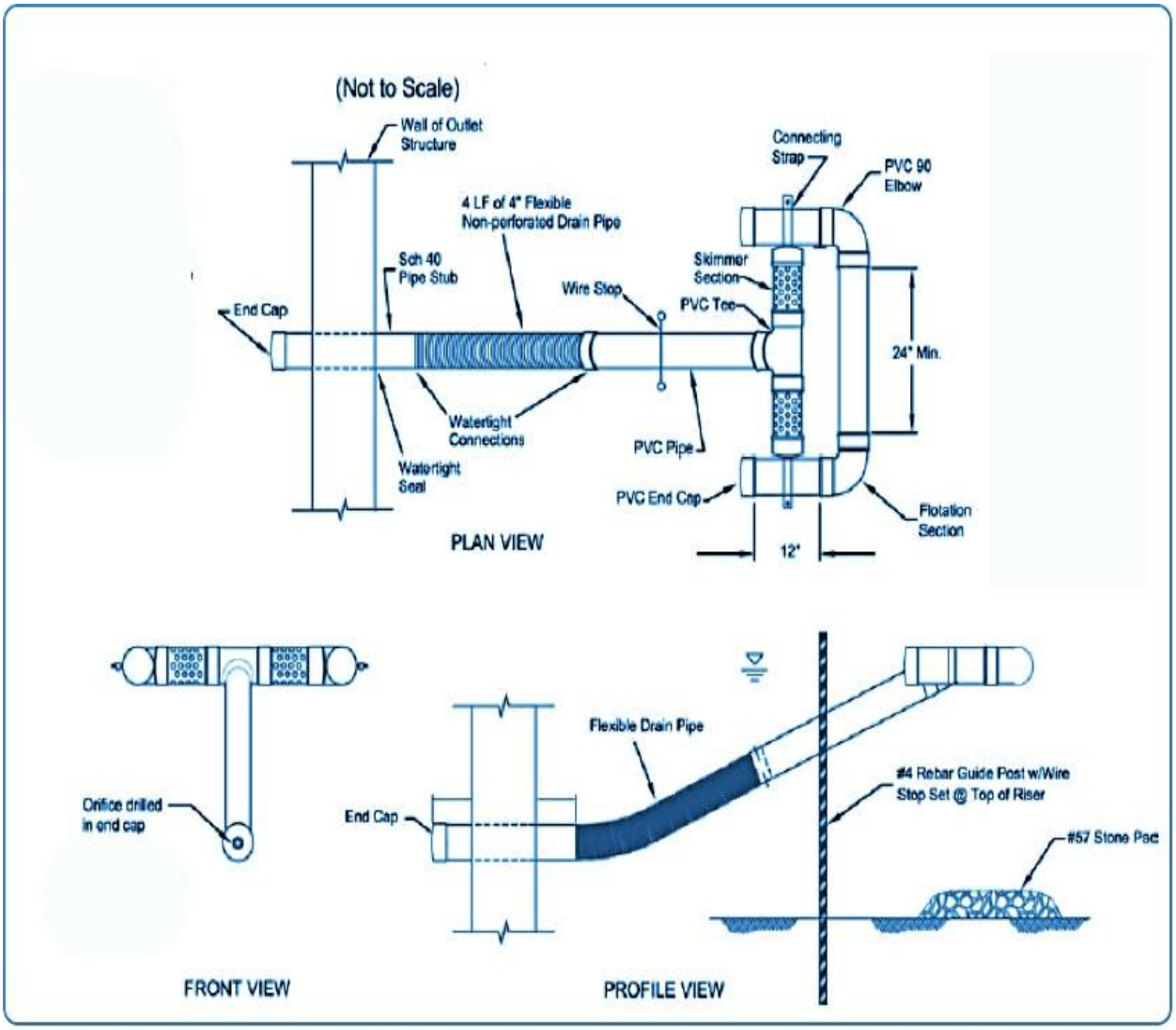

(Credit: Delaware DOT)

Figure 13. Faircloth Skimmer Schematic Developed by Warren Faircloth, North Carolina

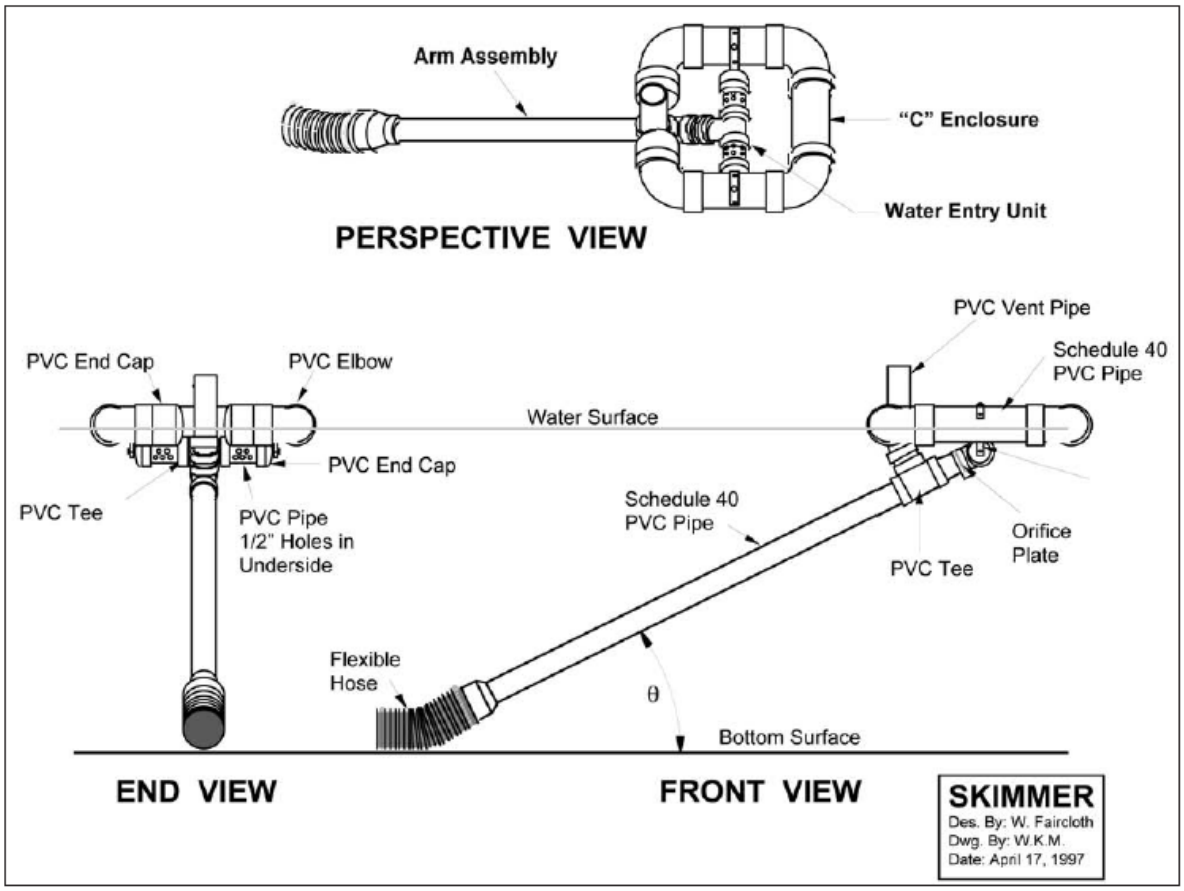

(Credit: *2002 Connecticut Guidelines for Soil Erosion and Sediment Control*)

While similarly drawing water from near the surface, the devices differ in the location of the orifice control. The Faircloth Skimmer has its orifice control located near the water surface and will maintain the same head over the orifice during dewatering. The Delaware DOT skimmer has its orifice control located at the lowest portion of the device and therefore will not have a consistent head throughout the dewatering period. Thus two different design approaches must be used in sizing the orifices for each skimmer.

Delaware DOT Skimmer Discharge

Discharge from the Delaware DOT skimmer can be calculated with the orifice flow equation shown below in **Figure 14**. The discharge from the Delaware DOT skimmer will vary since the head will change as the basin is dewatered.

Orifice Flow Equation: $Q=CA(2gH)^{0.5}$

Where :

Q = discharge in cubic feet per second (cfs)

C = orifice coefficient, typically a value of 0.6 is used for C

A = cross-sectional area of the orifice plate in square feet

g = acceleration due to gravity, 32.2 ft/sec^2

H = head above orifice in feet, from the orifice center to the water surface

As an alternative to utilizing the orifice flow equation, the following table can be utilized to determine discharge, Q, in cfs. The average head is used with the given range (e.g. for 0-2 feet, H = 0.5 feet).

Figure 14. Discharge, Q, in cfs for Different Orifice Sizes and Head Above Orifice (ft)

	Head above Orifice (ft.)				
	0' to 1'	1' to 2'	2' to 3'	3' to 4'	4' to 5'
Orifice Size (in.)	Discharge (cfs)				
1"	0.019	0.032	0.042	0.049	0.056
1.5"	0.041	0.072	0.093	0.110	0.125
2"	0.074	0.129	0.166	0.196	0.223
2.5"	0.116	0.201	0.259	0.307	0.348
3"	0.167	0.289	0.373	0.442	0.501
3.5"	0.227	0.394	0.508	0.602	0.682
4"	0.297	0.514	0.664	0.786	0.891

(Credit: *2002 Connecticut Guidelines for Soil Erosion and Sediment Control*)

The orifice shall be designed to remove the entire volume of the dewatering zone. The recommended minimum dewatering time for the sediment basin is 48 hours. The recommended maximum dewatering time should not exceed 7 days. The dewatering orifice shall be designed by the following procedure or other equivalent means.

- Step 1 – Knowing the size and shape of your dewatering zone, calculate the volume of water (cubic feet) in each 1-foot increment from the bottom of the dewatering zone to the top of the dewatering zone (e.g. 0-1', 1-2', 2-3', 3-4', 4-5').
- Step 2 – Select a trial orifice size, and use the chart on page 9 to determine the discharge, Q, for each 1-foot increment of head.
- Step 3 – Divide each volume calculated in step 1 by the corresponding Q (step 2) to get the total dewatering time.
- Step 4 – Sum the dewatering times for the 1-foot increments to get the total dewatering time. Make sure to convert the units from seconds to days (86,400 seconds/day).
- Step 5 – If the dewatering time is less than 2 days or greater than seven (7) days, select a different orifice size and repeat steps 2-5.

Faircloth Skimmer Discharge

The typical components of the Faircloth skimmer are shown in **Figure 13.** This skimmer consists of three primary parts: the arm assembly, the water entry unit and the "C" enclosure to keep debris from the water entrance. The "C" enclosure floats on the water surface and suspends the water entry unit just below the water surface. The arm assembly transports the water from the water entry unit to the basin's principal spillway barrel. The water discharge rate is to be controlled by an orifice located at the connection between the water entry unit and the arm assembly.

Instructions for design, installation and maintenance of Faircloth skimmers are available from the J.W. Faircloth & Sons Company at www.fairclothskimmer.com.

Installation Requirements

Install Sediment Controls for Contributing Areas

Install sediment controls to trap sediment before it enters and leaves the sediment basin construction site.

Stabilize the dam and emergency spillway in accordance with the engineered design, stabilize the spoil and borrow areas, and other disturbed areas in accordance with **Seeding for Temporary Vegetative Cover** or **Seeding for Permanent Vegetative Cover,** whichever is applicable.

Site Preparation

Clear, grub and strip topsoil to remove trees, vegetation, roots, or other unsuitable material from areas under the embankment or any structural works related to the basin. Clear and grub the area of most frequent inundation (measured from the top of the outlet control structure) of all brush and trees to facilitate clean out and restoration).

Inspection, Maintenance, and Removal Requirements

Inspections

Inspect the temporary sediment basin at least once a week and within 24 hours of the end of a storm with a rainfall amount of 0.25 inch or greater to determine conditions in the basin.

Chemical Treatment

In some instances chemical treatment may be necessary to increase solids settling in the temporary sedimentation basin. The use of treatment chemicals must be in compliance with **Appendix J, Chemical Treatment for Erosion and Sediment Control**.

Maintenance Sediment Removal

Clean the sediment basin of sediments when sediment accumulation exceeds one half of the wet storage capacity of the basin or when the depth of available pool is reduced to 18 inches, whichever is achieved first. Sediment levels shall be marked within the sediment storage area by stakes or other means showing the threshold elevation for sediment cleanout.

Prior to the removal of sediments, dewater the basin through pumping or other means to the expose previously submerged sediments. Use measures found in the **sub-section addressing Dewatering and Sediment Retention** and **Stockpile and Staging Area Management** when addressing the removal of accumulated sediments. Do not allow accumulated sediment to flush into the stream or drainageway. Stockpile the sediment in such a manner that it will not erode from the site or into a wetland, watercourse or other sensitive area.

Sediment removal, transportation and disposal shall occur as shown on the plans as limited by the design criteria.

Sediment basin designs shall include provisions for the periodic removal of accumulated sediments, including adequate access for excavating and hauling equipment, dewatering and the threshold of sediment deposition that triggers the sediment removal operation. Additionally, disposal sites for the removed sediments shall be planned. See measures found in the sub-section on **Dewatering and Sediment Retention** and **Stockpile and Staging Area Management**.

Removal

Once the project is completed and all site soils are stabilized the temporary sedimentation basin must be removed and the area must be permanently stabilized. In the cases where a temporary sedimentation basin will be utilized as a permanent detention basin, the temporary sediment basin must be modified as specified in the approved plans to prepare it for long term use. In these

instances, preparation efforts should, at a minimum, address the removal of any accumulated sediments.

Figure 15. Riser Basin (aerial view)

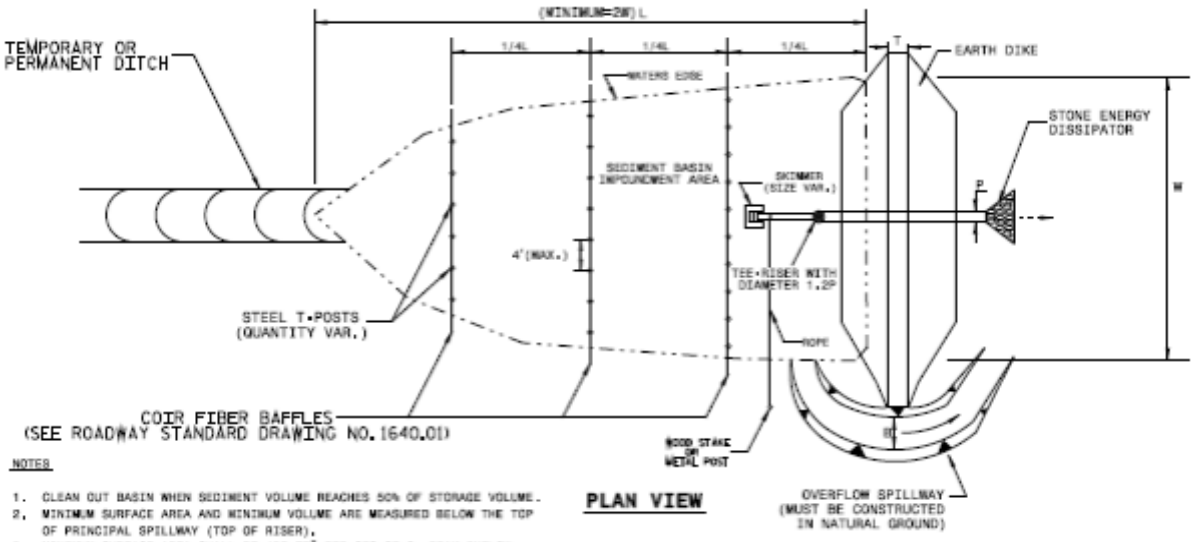

NOTES

1. CLEAN OUT BASIN WHEN SEDIMENT VOLUME REACHES 50% OF STORAGE VOLUME.
2. MINIMUM SURFACE AREA AND MINIMUM VOLUME ARE MEASURED BELOW THE TOP OF PRINCIPAL SPILLWAY (TOP OF RISER).
3. MINIMUM SURFACE AREA SHALL BE 435 FT^2 PER CFS OF Q_{10} PEAK INFLOW, AND MINIMUM SEDIMENT STORAGE VOLUME SHALL BE 1800 FT^3 PER ACRE OF DISTURBED AREA.
4. THE EARTH DIKE MAY BE CONSTRUCTED ALONG ONE OR MORE SIDES. EXCAVATION MAY BE REQUIRED TO PROVIDE MINIMUM SURFACE AREA AND/OR MINIMUM STORAGE VOLUME.
5. CONSTRUCT THE DIKE OF MATERIAL SUITABLE FOR AND MEETING ROADWAY EMBANKMENT SPECIFICATIONS.
6. TO FACILITATE DETERMINATION OF MAINTENANCE CLEANOUT REQUIREMENT, PLACE A MARKER IN THE BASIN INDICATING THE 50% VOLUME LEVEL.
7. THE MINIMUM RISER PIPE DIAMETER IS 1.2 TIMES THE BARREL PIPE DIAMETER.
8. ATTACH SKIMMER TO RISER PIPE A MINIMUM OF 1 FOOT FROM BOTTOM OF BASIN.
9. PROVIDE A STONE ENERGY DISSIPATOR PAD AT THE OUTLET OF THE RISER BARREL IN ACCORDANCE WITH ROADWAY STANDARD DRAWING NO. 878.02 FOR PIPE OUTLET WITHOUT DITCH.
10. SEED AND PLACE MATTING FOR EROSION CONTROL ON ALL INTERIOR AND EXTERIOR SLOPES OF BASIN.

STANDARD BASIN DIMENSIONS

P	H	T (MIN)	D*	E	F	B (MIN)	X (MIN)	Y (MIN)	X1 (MIN)	Y1 (MIN)
IN.	FT.	FT.	FT.	FT.	FT.	FT.	FT.	FT.	FT.	FT.
15	1.0	6.0	8.0	4.0	1.0	3.0	2.7	1.0	2.5	1.0
18	1.0	6.0	6.5	4.5	1.0	4.0	3.5	1.0	3.2	1.0
24	1.0	6.0	8.0	6.0	1.0	8.0	5.5	1.0	5.0	1.0
30	1.0	6.0	9.5	7.0	1.5	8.0	7.6	1.0	6.9	1.0

* SHALL NOT EXCEED 12'

Page 5 NOT TO SCALE

Figure 16. Riser Basin (plan view)

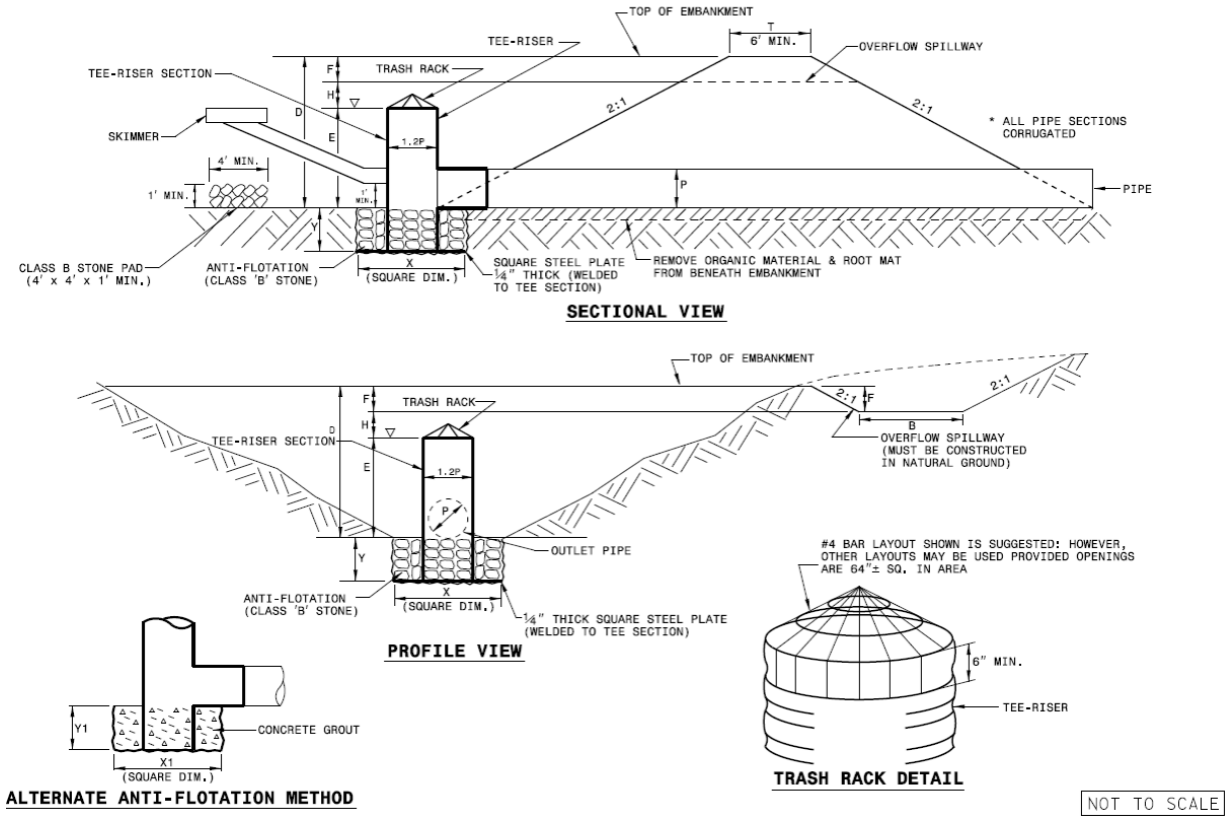

Temporary Sediment Traps

(Photo Credit: US EPA)

Definition

- A temporary ponding area with a stone outlet formed by excavation and/or constructing an earthen embankment.
- Note: Avoid placing temporary sediment traps directly in the line of flow. If placed in the line of flow, peak flows must be addressed.

Purpose

- To detain sediment-laden runoff from small disturbed areas long enough to allow a majority of the sediment to settle out.

Applicability

- Below disturbed areas where the contributing drainage area is 5 acres or less -- for drainage areas greater than 5 acres use a **Temporary Sediment Basin.**
- Where the intended use is 6 months or less. For uses extending beyond 6 months use a **Temporary Sediment Basin.**
- When diverting sediment-laden water with temporary diversions that meet the above limitations for use.

Planning and Design Requirements

Note: This measure is intended to be used for a period of 6 months or less. For uses greater than 6 months use a **Temporary Sediment Basin.**

Preliminary Considerations

Sequence the construction of temporary sediment traps, along with other perimeter erosion and sediment controls so that traps are constructed and functional before land disturbance in the contributing drainage area occurs.

The temporary sediment trap has two storage requirements: one for wet storage and one for dry storage. Commonly, the wet storage is created by excavation within a drainage way and the dry storage created by the construction of a pervious stone dike across the drainage way. Sometimes the trap is formed, at least in part, by the construction of an embankment. Such an embankment constitutes a dam and is therefore limited to a height of no greater than 6 feet and requires care in its construction. (Please note: A proposal to construct an impoundment having a dam six (6) feet in height or more, or a capacity of fifteen (15) acre-feet or more, or that is a significant or high hazard dam may subject the owner to additional requirements in accordance with the RIDEM Dam Safety Program and the State of Rhode Island Department of Environmental Management Office of Compliance and Inspection – Rules and Regulation for Dam Safety.)

ESC plans should identify the size of the contributing drainage area, wet and dry storage requirements as well as the volume of sediment accumulation that will trigger trap cleaning. Sediment is required to be removed from the trap when the sediment accumulation exceeds half of the wet storage volume of the trap. The plans should also guarantee that access is provided for sediment removal and detail how excavated sediment will be disposed (such as by use in fill areas on-site or removal to an approved off-site location).

Variations in temporary sediment trap design may be considered, but plan reviewers should ensure the minimum storage requirements and structural requirements noted below are maintained.

Location

Locate temporary sediment traps so that they can be installed prior to conducting any grading activities in the contributing watershed. Do not locate traps in close proximity to existing or proposed building foundations if there is any concern regarding seepage of water from the temporary sediment trap into the foundations or foundation excavation area. Locate traps to obtain maximum storage benefit from the terrain, for ease of clean out and disposal of the trapped sediment.

It is not recommended to locate a sediment basin within an extended detention basin or a stormwater treatment basin. Fine soil particles found in the sediments removed by the sediment basin will seal the underlying soils of the sediment basin and the future infiltration capacity of the soils may be significantly reduced.

Trap Capacity

The temporary sediment trap shall have an initial storage volume of 134 cubic yards per acre of drainage area, half of which shall be in the form of wet storage to provide a stable settling medium. The remaining storage volume shall be in the form of a drawdown (dry storage) which will provide extended settling time during less frequent, larger storm events. **Figure 1** contains the formulas for calculating the wet storage volume and the dry storage volume. The volume of wet storage shall be measured from the low point of the excavated area to the base of the stone outlet

structure (see **Figure 2**). The volume of the dry storage shall be measured from the base of the stone outlet to the top of the stone outlet (overflow mechanism). Note: In accordance with Standard 10 of the 2010 Rhode Island Stormwater Design and Installation Standards Manual temporary sediment trapping measures must be sized to store 1 inch of runoff from the contributing area or per the sediment volume method (equation provided in **Temporary Sediment Basins**) whichever is greater.

Try to provide a storage area which has a minimum 2:1 length to width ratio (measured from point of maximum runoff introduction to outlet).

Figure 1. Wet and Dry Temporary Sediment Trap Storage Volume Formulas

Wet storage volume may be approximated as follows:

$$Vw = 0.85 \times A_w \times D_w$$

where,

- V_w = the wet storage volume in cubic feet
- A_w = the surface area of the flooded area at the base of the stone outlet in square feet
- D_w = the maximum depth in feet, measured from the low point in the trap to the base of the stone outlet.

Dry storage volume may be approximated as follows:

$$V_d = \frac{(A_w + A_d)}{2} \times D_d$$

where,

- V_d = the dry storage volume
- A_w = the surface area of the flooded area at the base of the stone outlet in square feet.
- A_d = the surface area of the flooded area at the top of the stone outlet (over flow mechanism), in square feet
- D_d = the depth in feet, measured from the base of the stone outlet to the top of the stone outlet

Note: Conversion between cubic feet and cubic yards is: cubic feet x 0.037 = cubic yards.

Figure 2. Minimum Top Width for Temporary Sediment Trap Embankments Based on Height of Embankment

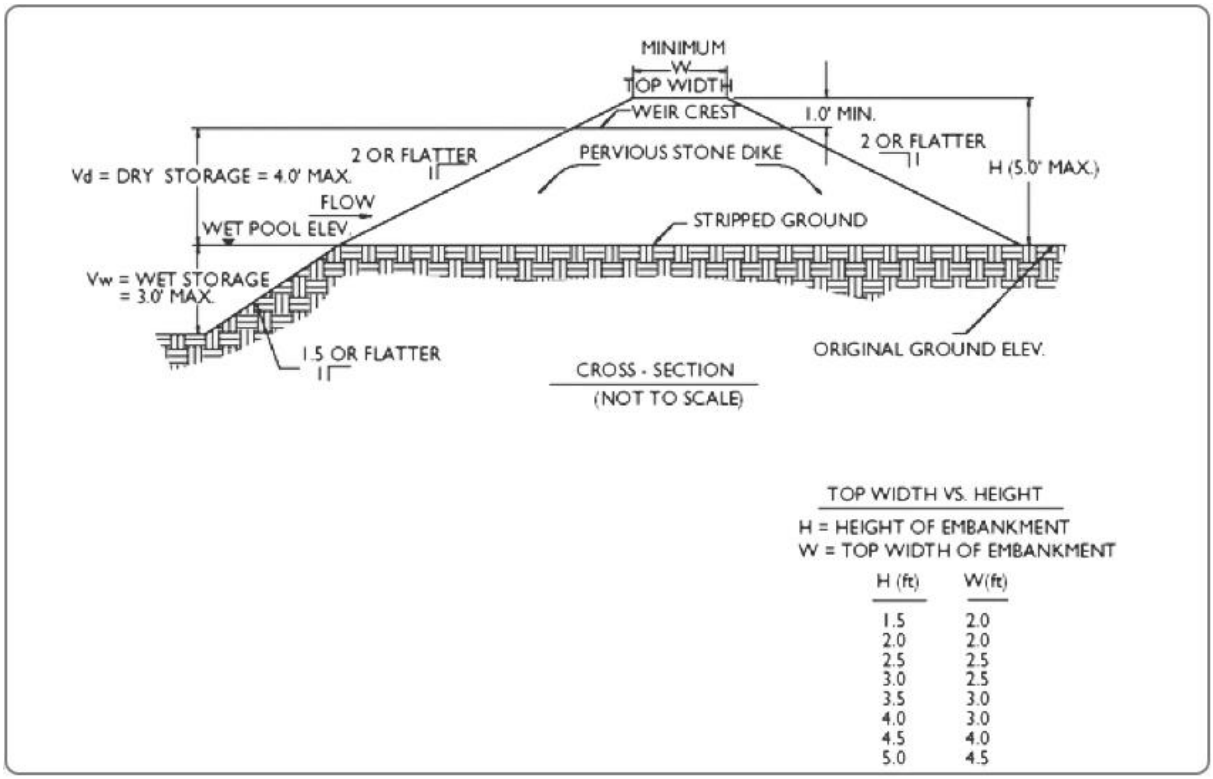

(Credit: *2002 Connecticut Guidelines for Soil Erosion and Sediment Control*)

Slope Limitations

All cut and fill slopes shall be 2:1 or flatter except for the excavated wet storage area where slopes shall not exceed 1.5:1. The maximum depth of excavation within the wet storage area should not exceed three (3) feet to facilitate clean-out and for site safety considerations.

Inlet/Outlet Configuration

The outlet shall be located at the most distant hydraulic point from the inlet. In cases where a long narrow site runs perpendicular to the direction of flow, baffles consisting of stone dikes or other structurally sufficient barriers should be added along the long axis of the trap to increase travel distance through the trap.

Outlet

Plan the outlet in such a manner that the minimum required wet storage and dry storage volumes are created (see Trap Capacity section above) and one (1) foot of free board between the top of the outlet or weir crest and the crest of the embankment is established. The outlet consists of a pervious stone dike with a core of modified riprap and faced on the upstream side with stone which meets the requirements of RIDOT Standard Specifications for Road and Bridge Construction Subsection M.01.09 Table I, Column V for Filter Stone. Temporary sediment traps must outlet onto stabilized (preferably undisturbed) ground, into a watercourse, stabilized channel, or into a storm drain system. **Figure 3** shows an example of an outlet for a temporary sediment trap.

Figure 3. Views of a Temporary Sediment Trap Outlet

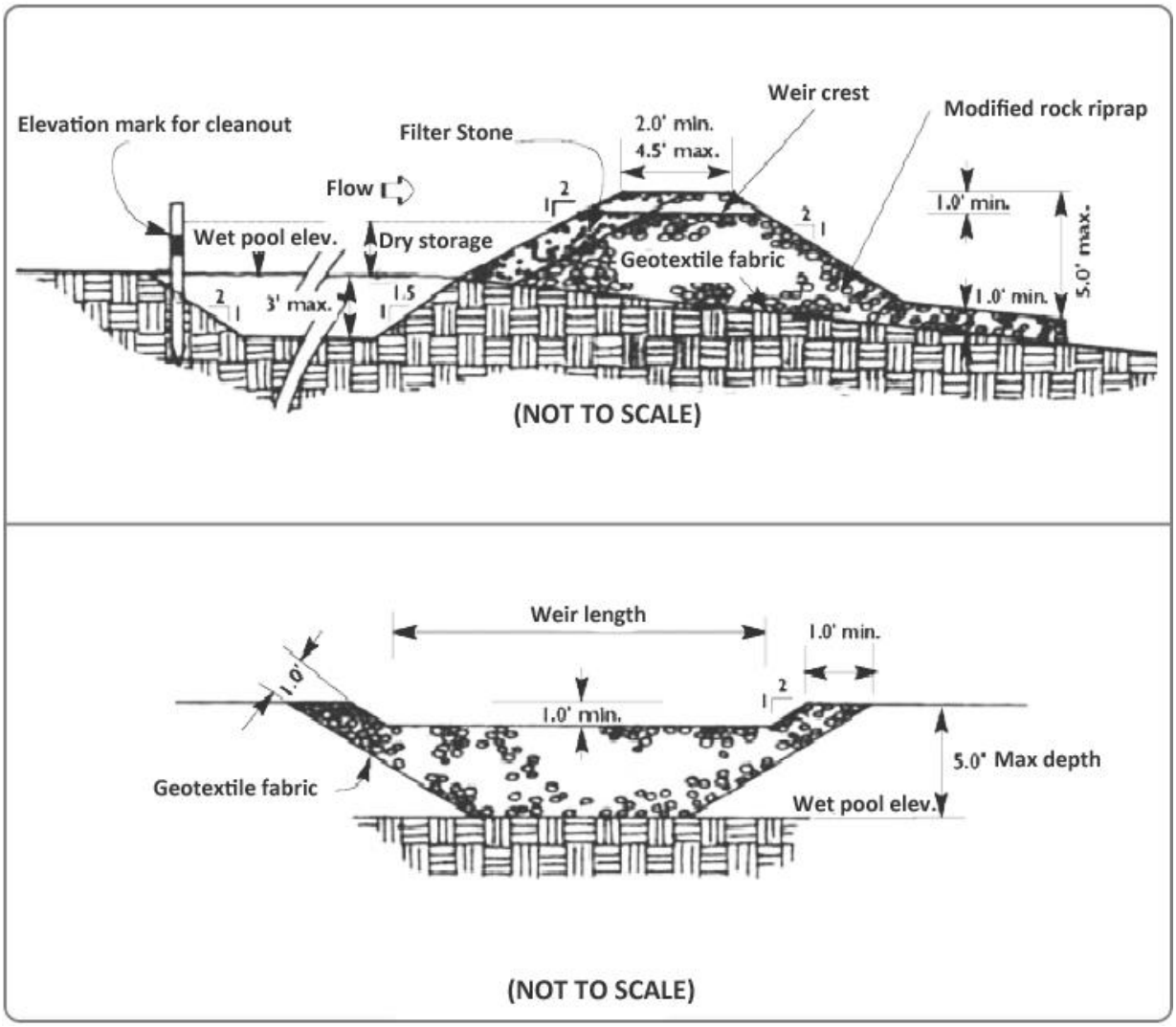

(Credit: *2002 Connecticut Guidelines for Soil Erosion and Sediment Control*)

Embankment

The maximum height of a temporary sediment trap embankment is limited to 5 feet as measured vertically from the crest of the embankment to the down slope base of the embankment or toe of the stone dike, whichever is lower. Minimum top widths (W) and outlet heights (Ho) for various embankment heights (H) are shown in **Figure 2**. Side slopes of the embankment shall be 2:1 or flatter.

Materials

Modified Riprap: shall meet the requirements of RIDOT Standard Specifications for Road and Bridge Construction Subsection M.10.03.2.

Filter Stone: shall meet the requirements of RIDOT Standard Specifications for Road and Bridge Construction Subsection M.01.09 Table I, Column V Filter Stone.

Sediment Storage Markers

Detail the location and installation requirements for sediment storage stakes or other means of showing the threshold elevation for sediment cleanout.

Installation Requirements

Clear, grub and strip any vegetation and root mat from any proposed embankment and outlet area. Remove stones and rocks whose diameter is greater than three (3) inches and other debris.

Excavate wet storage and construct the embankment and/or outlet as needed to attain the necessary storage requirements. Use only fill material for the embankment that is free from excessive organics, debris, large rocks (over six (6) inches) or other unsuitable materials. Compact the embankment in 9-inch layers by traversing with equipment while it is being constructed.

Stabilize the earthen embankment using any of the following measures, Seeding for Temporary Vegetative Cover; Seeding for Permanent Vegetative Cover; or Slope Protection, immediately after installation.

Carry out construction operations in such a manner that erosion and water pollution are minimized.

Inspection, Maintenance, and Removal Requirements

Inspect the temporary sediment trap at least once a week and within 24 hours of the end of a storm with a rainfall amount of 0.25 inch or greater. Check the outlet to ensure that it is structurally sound and has not been damaged by erosion or construction equipment. The height of the stone outlet or weir crest should be maintained at least 1 foot below the crest of the embankment. Also check for sediment accumulation and filtration performance.

When sediments have accumulated to one half the minimum required volume of the wet storage, dewater the trap as needed, remove sediments and restore the trap to its original dimensions. Dispose of the sediment removed from the basin in a suitable area and in such a manner that it will not erode and cause sedimentation problems.

The temporary sediment trap may be removed after the contributing drainage area is stabilized. If it is to be removed, then the plans should show how the site of the temporary sediment trap is to be graded and stabilized after removal.

Temporary Stream Crossings

(Photo Credit: US EPA)

Definition

- A temporary stream crossing might be a bridge, a culvert, or a ford.

Purpose

- To provide a safe, stable way for construction vehicle traffic to cross a watercourse.
- To provide streambank stabilization, reduce the risk of damage to the streambed or channel, and minimize sediment loading from construction traffic.

Applicability

- Because of the potential for stream degradation, flooding, and safety hazards, avoid stream crossings whenever possible.
- Temporary stream crossings are appropriate where heavy construction equipment must be moved from one side of a stream channel to the other.
- They can also be used where lighter construction vehicles will cross the stream repeatedly during construction.
- A bridge or culvert is the best choice for most temporary stream crossings because each can support heavy loads.
- Fords should be used only where flash flooding might occur, where normal flow is intermittent, where stream crossings are expected to be infrequent, or in seasonally dry streambeds.
- Where crossings are unavoidable, design crossings to cross the narrowest possible section of wetland.
- Use or upgrade existing paths or roads to avoid previously undisturbed areas.
- Avoid crossing through or bisecting wetland life breeding areas.
- Consider using precast bridges, especially for longer spans, allowing installation to occur with minimal contact to the wetland.

Planning and Design Requirements

- Consider alternative routes to accessing a site before planning to erect a temporary

stream crossing. If a stream crossing is necessary, select an area where the potential for erosion is low. If possible, select the stream crossing structure during a dry period to reduce sediment transport into the stream.

- If bridges are needed, construct them only under the supervision and approval of a qualified engineer.
- Ensure that consideration is given to changing flow regimes, native soil qualities, habitat protection, and restoration considerations.
- Be aware that temporary stream crossings can cause risk to fish habitat. Potential threats include destabilization of embankments, compaction of stream beds, sediment release, vehicle fluid leaks, changes in channel morphology and alteration of flows.
- Of the options listed above, stream fords are the least desirable. When fords are the only option, some key conditions must be met.
  - The work must not include diverting flow or realigning the channel or stream bank.
  - Crossing sites must avoid know fish spawning sites (pools, etc.).
  - The crossing must not result in erosion or sedimentation of the stream or blockage of fish passage.
  - Fording should only be employed when culverts or temporary bridges are impractical or impossible to utilize.
  - Grading of steam banks for approaches is not permitted.
  - Fords should be employed only where water depth is sufficiently shallow to allow passage of vehicles at very low speeds.
  - Effective erosion and sediment control measures must be installed prior to starting work. These measures must be inspected regularly and maintained properly.
- Seasonally dry stream fords must be protected from erosion and possible sedimentation caused by significant rainfall events. Appropriate technology must be employed. In these areas, or in areas where minor rutting is likely to occur, logs, swamp pads or rubber mats may be used. One proven design method involves installation of three-dimensional cellular confinement grid over a non-woven geotexile base. The cellular confinement grid is then filled with clean stone. So as not to alter seasonal flows, it is important that these installations match the contours of the existing streamed bed.

Installation Requirements

- Construct temporary bridges per the site-specific specifications of the designing engineer. Ensure bank stabilization with methods such as cribbing or riprap, ensure stable approaches with compaction and the use of geotextile, and ensure a stable bridge deck that will withstand the weight of vehicles that will be using the bridge (**Figure 1**).
- Construct, use, and disassemble during periods of low flow and frozen ground conditions whenever possible.

Inspection and Maintenance

- Inspect crossings regularly and perform maintenance as needed on and around all structures.
- Equipment must arrive on site in clean condition and is to be maintained carefully. Mud must be removed, the equipment must be free of leaks, invasive species and noxious weeds.
- Wash and maintain vehicles and all service equipment at a designated site well away from the stream bed.

Compost Filter Berms

(Photo Credit: US EPA)

Definition

- A compost filter berm is a dike (trapezoidal in cross section) of compost or a compost product that is placed perpendicular to sheet flow runoff to control erosion in disturbed areas and retain sediment.
- Compost may be made from municipal yard trimmings, food residuals, separated municipal solid waste, biosolids, and manure
- Typical compost or mulch berms are constructed a minimum of one (1) foot high and three (3) feet wide.

Purpose

- To provide a three-dimensional filter that retains sediment and other pollutants (e.g., suspended solids, metals, oil and grease) while allowing the cleaned water to flow through the berm;
- To be used in place of a traditional sediment and erosion control tool such as a silt fence;
- To reduce slope lengths in disturbed areas;
- To retain transported sediment on site;
- To protect adjacent property and wetlands and waterways from unwanted sediment; deposition.
- Vegetated filter berms are normally left in place and provide long-term filtration of stormwater as a post-construction best management measure (BMP).

Applicability

- Compost berms can be installed at any location where sediment can exit the jobsite or property.
- Compost filter berms are applicable to construction sites with relatively small drainage areas, where stormwater runoff occurs as sheet flow. Common industry measure is to use compost filter berms in drainage areas that do not exceed 0.25 acre per 100 feet of berm length and where flow does not typically exceed 1 cubic foot per second
- Not for use on moderate or steep slopes

Note: They are generally designed to last one construction season.

Planning and Design Requirements

Benefits of Compost Berms

Filter berms, in general, provide an effective physical barrier in sheet flow conditions; however, the use of compost in the filter berm provides additional benefits. These benefits include the following:

- The compost retains a large volume of water, which helps prevent or reduce rill erosion and aids in establishing vegetation on the berm.
- The mix of particle sizes in the compost filter material retains as much or more sediment than traditional perimeter controls, such as silt fences or straw bale barriers, while allowing a larger volume of clear water to pass through the berm. Silt fences often become clogged with sediment and form a dam that retains stormwater, rather than letting the filtered stormwater pass through.
- In addition to retaining sediment, compost can retain pollutants, such as heavy metals, nitrogen, phosphorus, oil and grease, fuel, herbicides, pesticides, and other potentially hazardous substances, from stormwater, improving water quality downstream of the berm. Nutrients and hydrocarbons adsorbed and/or trapped by the compost can be cycled and decomposed through bioremediation by microorganisms commonly found in the compost matrix (USEPA, 1998).

Planning

- Determine areas where sediment has the potential to exit the property.
- Identify longer slopes where multiple sediment barrier rows may be needed.

Berm Dimensions

Filter berms installed to control erosion and sediment on a slope or near the base of a slope are trapezoidal in cross section, with the base generally twice the height of the berm. The height and width of the berm will vary depending upon the precipitation and the rainfall erosivity index (EPA, 2001) of the site. Typical compost filter berm dimensions for Rhode Island average rainfall is shown in **Figure 1**.

Figure 1. Typical Compost Filter Berm Dimensions on Flat or Gently Sloping Sites

Annual Rainfall/ Flow Rate	Precipitation/year (Rainfall Erosivity Index)	Berm Dimensions (height x width)
Low	1-25 in.	1 ft x 2 ft to 1.5 ft x 3 ft
Average	26-50 in.	1 ft x 2 ft to 1.5 ft x 3 ft
High	>51 in.	1.5 ft x 3 ft to 2 ft x 4 ft

(Credit: *2002 Connecticut Guidelines for Soil Erosion and Sediment Control*)

Compost filter berm dimensions should be modified based on site-specific conditions, such as soil characteristics, existing vegetation, site slope, and climate, as well as project-specific requirements. Coarser compost products are generally recommended on sites subject to high

rainfall or wind erosion. Example filter berm dimensions based on the site slope and slope length developed by the Oregon Department of Environmental Quality (ODEQ) are shown in **Figure 2**.

Figure 2. Example Compost Filter Berm Dimensions Based on Slope and Slope Length

If the slope is:	and the slope length is:	then a berm is appropriate and should be sized as follows:
<50:1	<250 ft	1 ft high x 2 ft wide
between 50:1 and 10:1	<125 ft	1 ft high x 2 ft wide
between 10:1 and 5:1	<100 ft	1 ft high x 2 ft wide
between 5:1 and 2:1	<50 ft	1.3 ft high x 2.6 ft wide
>2:1	<25 ft	1.5 ft high x 3 ft wide

Installation Requirements

- The compost berm can be installed by hand; by using a backhoe, bulldozer, or grading blade; or by using specialized equipment such as a pneumatic blower or side discharge spreader with a berm attachment. The compost should be uniformly applied to the soil surface, compacted, and shaped to into a trapezoid. Compost filter berms can be installed on frozen or rocky ground. The filter berm may be vegetated by hand, by incorporating seed into the compost prior to installation (usually done when the compost is installed using a pneumatic blower or mixing truck with a side discharge), or by hydraulic seeding following berm construction. Proper installation of a compost filter berm is the key to effective sediment control. Install all devices along slope contours.
- Install as far away from toe of slope as possible in order to maximize storage area.
- Termination points should be extended uphill at least six (6) feet.

Inspection, Maintenance, and Removal Requirements

- Compost filter berms should be inspected regularly, as well as after each rainfall event, to ensure that they are intact and the area behind the berm is not filled with silt. Inspect for damage and replace or repair damaged sections as needed.
- Accumulated sediments should be removed from behind the berm when the sediments reach approximately one-third to one-half the height of the berm.
- Any areas that have been washed away should be replaced. If the berm has experienced significant washout, a filter berm alone may not be the appropriate BMP for this area. Depending upon the site-specific conditions, the site operator could remedy the problem by increasing the size of the filter berm or adding another BMP in this area, such as an additional compost filter berm or compost filter sock, a compost blanket, or a silt fence.
- Remove all devices once permanent erosion control measures are in place and functioning. Compost can easily be worked into the soil at time of final stabilization.

Silt Fence

(Photo Credit: US EPA)

Definition

- A temporary barrier of geotextile fabric installed on the contours across a slope.

Purpose

- To intercept sediment laden runoff from small drainage areas of disturbed soil.
- To break up longer slopes, reduce runoff velocity, and cause deposition of transported sediment.
- To retain transported sediment on site and protect adjacent property, resource areas and wetlands and waterways from unwanted sediment deposition.

Applicability

- These control measures are placed perpendicular to sheet-flow runoff to control erosion and retain sediment in disturbed areas.
- Not intended for use to define property boundaries, unless designed to reduce storm water flow coming on to the construction site.

Planning and Design Requirements

General

- Identify areas within the construction site where erosion may occur
- Determine areas where sediment has the potential to exit the property or enter an environmentally sensitive area, such as a wetland, water of the State, or cultural/historic area
- Identify longer slopes where multiple barrier rows may be needed.
- A silt fence may be used, subject to the slope conditions listed in **Figure 1**.

Figure 1. Maximum Allowable Slope Lengths Contributing Runoff to a Silt Fence

Slope Steepness	Maximum Length (ft)
2:1	25
3:1	50
4:1	75
5:1 or flatter	100

(Credit: *2002 Connecticut Guidelines for Soil Erosion and Sediment Control*)

- A silt fence may be used where maximum drainage area for overland flow to the silt fence does not exceed ¼ acre per 100 feet of fence, with maximum ponding depth of 1.5 feet behind the fence.
- A silt fence may be used where erosion would occur in the form of sheet erosion.
- A silt fence may be used where there is no concentration of water flowing to the barrier.

Protecting Sensitive Areas Using Linear Sediment Barriers:

Highly sensitive areas (such as wetland, waters of the State, or cultural/historic area and/or adjoining properties) can be protected by a silt fence that may need to be reinforced by using heavy wire fencing for added support to prevent collapse or a combination of a straw bale and silt fence combined.

Straw Bale Erosion Check and Silt Fence Combined. “Straw Bale Erosion Check and Silt Fence Combined” will be installed in accordance with the plans and/or as directed by the Engineer and using specifications within this measure and **Straw Bales**.

Figure 2. Fabric Specifications

Fabric Properties	Minimum Acceptable Value	Test Method
Grab Tensile Strength (lbs)	90	ASTM D1682
Elongation at Failure (%)	50	ASTM D1682
Mullen Burst Strength (PSI)	190	ASTM D3786
Puncture Strength (lbs)	40	ASTM D751 (modified)
Slurry Flow Rate (gal/min/sf)	0.3	
Equivalent Opening Size	40-80	US Std Sieve CW-02215
Ultraviolet Radiation Stability (%)	90	ASTM G-26

(Credit: *2002 Connecticut Guidelines for Soil Erosion and Sediment Control*)

Materials

Silt Fence

- Fabric specifications shall meet or exceed the values as listed in figure 2.
- Fence Posts (for fabricated units): The length shall be a minimum of 36 inches long. Wood posts will be of sound quality hardwood with a minimum cross sectional area of three (3) square inches. Steel posts will be standard T and U section weighing not less than one (1) pound per linear foot.
- Posts shall be set at a minimum of 8 feet on center.
- Wire Fence (for fabricated units): Wire fencing shall be a minimum 14 gage with a maximum six (6) in. mesh opening, or as approved.

Design Criteria

Figure 3. Proper Installation of Silt Fence (with or without wire fence)

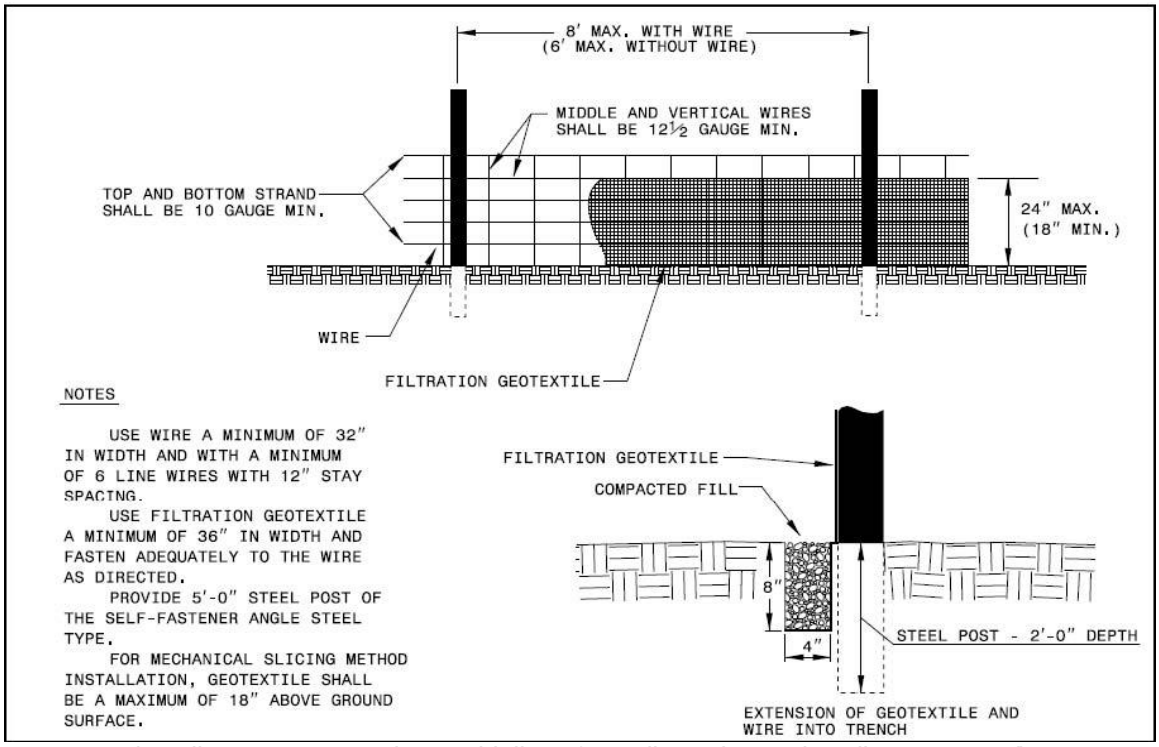

(Credit: *2002 Connecticut Guidelines for Soil Erosion and Sediment Control*)

General

- Design computations are not required for installations of 1 month or less. Longer installation periods should be designed for expected runoff.
- Sensitive areas may require the use of reinforced or multiple materials.

Silt Fence

- Design computations are not required for installations of one (1) month or less. Longer installation periods should be designed for expected runoff.
- All silt fences shall be placed as close to the areas as possible, but at least 10 feet from the toe of a slope to allow for maintenance and roll down.
- The area beyond the fence must be undisturbed or stabilized.
- Sensitive areas to be protected by silt fence may need to be reinforced by using heavy wire fencing for added support to prevent collapse.
- Where ends of filter cloth come together, they shall be overlapped, folded and stapled to prevent sediment bypass.

Installation Requirements

Figure 4. Wire Mesh Silt Fence Reinforced with Sediment Control Stone

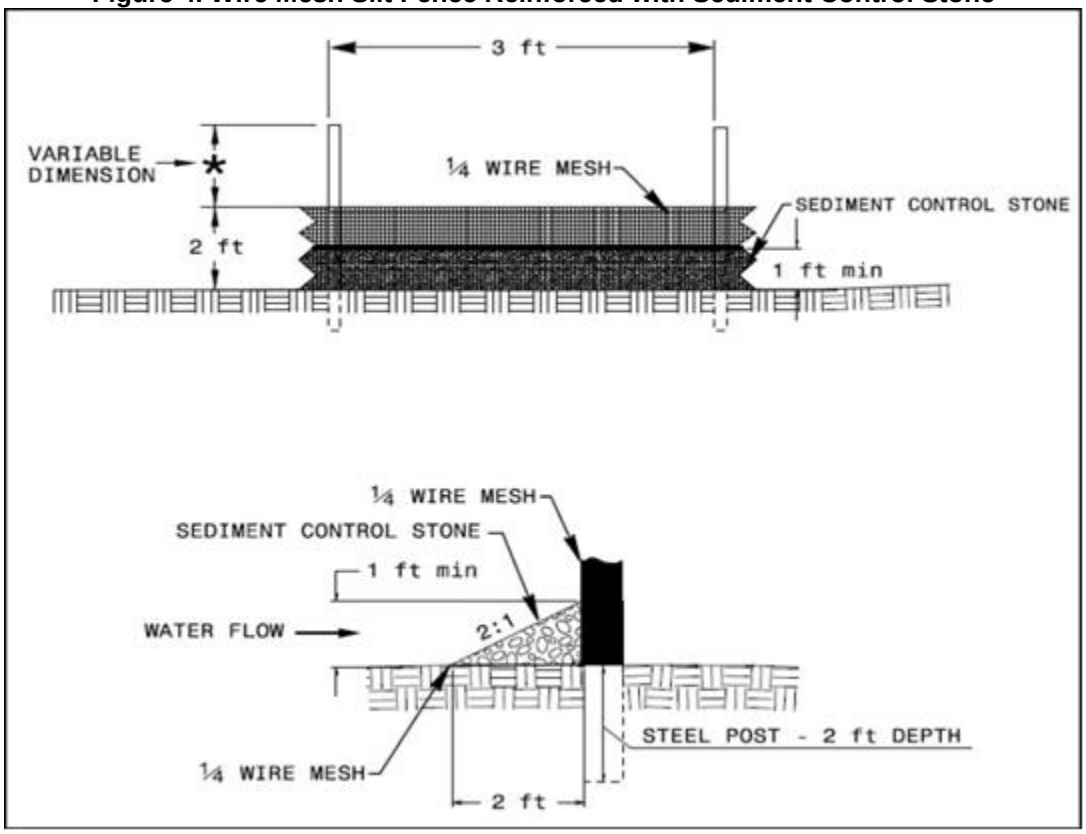

(Credit: *2002 Connecticut Guidelines for Soil Erosion and Sediment Control*)

General

- All silt fences shall be placed as close to the disturbed areas as possible, but at least 10 feet from the toe of a slope to allow for maintenance and roll down.
- The area beyond the fence must be undisturbed or stabilized.

Silt Fence

- Design computations are not required for installations of one (1) month or less. Longer installation periods should be designed for expected runoff.
- Silt fence can be installed by hand or by machine slicing.
- Fabric should be buried at least six inches deep (**Figure 3**).
- Termination points should be extended uphill at least six (6) feet.
- Where ends of filter cloth come together, they shall be overlapped, folded and stapled to prevent sediment bypass.
- Sensitive areas to be protected by silt fence may need to be reinforced by using heavy wire fencing for added support to prevent collapse (**Figure 4**).

Inspection, Maintenance, and Removal Requirements

General

- Remove all devices once permanent erosion control measures are in place and functioning unless devices are designed to remain in place (i.e. compost filter socks with seed).
- Inspect regularly for water undercutting and bypassing of devices.
- Inspect for damage and replace or repair damaged sections as needed.
- Ultra-violet light breaks down the fabric, and limits its life span and utility.
- Remove sediment when it reaches 1/2 the height of the device.
- Biodegradable wattles, tubes and rolls can be worked into soils at the jobsite. In some cases, they can simply be left in place.
- Silt fence will not be left to rot in place. The silt fence may be removed only when the adjacent exposed area is stabilized, i.e., the area has an established grass or stone cover or has been paved, and is free from future uncontrolled discharges.
- Immediately upon removal of the silt fence the remaining exposed areas will be finished as specified above in plans..

Straw Wattles, Compost Tubes and Fiber Rolls

(Photo Credit: US EPA)

Definition

- Compost Filter Socks: Three-dimensional tubular filtration devices constructed by filling a mesh tube with a compost filter media.
- Straw Wattles: Straw-filled tubes of flexible netting materials. Commonly used filler materials include wheat and rice straw.
- Fiber rolls: Wood excelsior or coconut fiber filled tubes of flexible netting materials.

Purpose

- To intercept sediment laden runoff from small drainage areas of disturbed soil.
- To break up longer slopes, reduce runoff velocity, and cause deposition of transported sediment.
- To retain transported sediment on site and protect adjacent property, resource areas and wetlands and waterways from unwanted sediment deposition.

Applicability

- Compost Filter Socks, Straw Wattles, and Fiber Rolls provide alternatives to straw bales and silt fence sediment barriers.
- These control measures are placed perpendicular to sheet-flow runoff to control erosion and retain sediment in disturbed areas.
- Not intended for use to define property boundaries, unless designed to reduce stormwater flow coming onto the construction site.
- Socks, wattles and rolls may be totally biodegradable &/or left in place as a permanent measure, depending upon the intent of the application and material specifications.

Note: Readers will note that 'hay bales' do not appear in this section as sediment control devices. While hay bales were used extensively early in the evolution of jobsite sediment control, new innovations and technology, discussed thoroughly in this manual, has replaced them.

Planning and Design Requirements

Applicability

General

- Identify areas within the construction site where erosion may occur
- Determine areas where sediment has the potential to exit the property or enter an environmentally sensitive area, such as a wetland, water of the State, or cultural/historic area.
- Identify longer slopes where multiple barrier rows may be needed.

Figure 1. Maximum Allowable Slope Lengths Contributing Runoff to a Sediment Barrier

Slope Steepness	Maximum Length (ft)
2:1	25
3:1	50
4:1	75
5:1 or flatter	100

(Credit: *2002 Connecticut Guidelines for Soil Erosion and Sediment Control*)

- A sediment barrier may be used where erosion would occur in the form of sheet erosion.
- A sediment barrier may be used where there is no concentration of water flowing to the barrier.

Straw Wattles and Fiber Rolls

- Wattles and Fiber Rolls can be used in areas of low shear stress.
- Wattles and Fiber Rolls can be suitable in the following settings:
    - Along the toe, top, face, and at-grade breaks of exposed and erodible slopes to shorten slope length and spread runoff as sheet flow;
    - At the end of a downward slope where it transitions to a steeper slope;
    - Along the perimeter of a project to control runoff or runon surface flows;
    - As temporary 'check dams' in unlined ditches;
    - Downslope of exposed soil areas; and
    - Around temporary stockpiles.

- Determine the vertical spacing for slope installations on the basis of the slope gradient and soil type., a good rule of thumb[5] is:

[5] According to California Straw Works (2005).

1:1 slopes = 10 feet apart
2:1 slopes = 20 feet apart
3:1 slopes = 30 feet apart
4:1 slopes = 40 feet apart

- To be effective, wattles and fiber rolls at the toe of slopes greater than 5:1 must be at least 20 inches in diameter. An equivalent installation, such as stacked smaller-diameter fiber rolls, can be used to achieve a similar level of protection.

Compost Filter Socks

- Recommended design practice for compost filter devices is that drainage areas do not exceed 0.25 acre per 100 feet of device length and flow does not exceed one cubic foot per second (EPA, 2006).
- Compost Filter Socks may be used, subject to the slope conditions listed in **Figure 2**.

Figure 2: Recommended Spacing and Diameter Requirements for Compost Filter Socks

	Maximum slope length above compost filter sock in ft (m)			
	Diameter of compost filter sock required			
Slope %	8-inch (200-mm)	12-inch (300-mm)	18-inch (450-mm)	24-inch (600-mm)
2 (or less)	300 (90)	375 (110)	500 (150)	650 (200)
5	200 (60)	250 (75)	275 (85)	325 (100)
10	100 (30)	125 (35)	150 (45)	200 (60)
15	70 (20)	85 (25)	100 (30)	160 (50)
20	50 (15)	65 (20)	70 (20)	130 (40)
25	40 (12)	50 (15)	55 (16)	100 (30)
30	30 (9)	40 (12)	45 (13)	65 (20)
35	30 (9)	40 (12)	45 (13)	55 (18)
40	30 (9)	40 (12)	45 (13)	50 (15)
45	20 (6)	25 (8)	30 (9)	40 (12)
50	20 (6)	25 (8)	30 (9)	35 (10)

- Compost filter socks can be used on steeper slopes with faster flows if they are spaced more closely, stacked beside and/or on top of each other, made in larger diameters, or used in combination with other stormwater BMPs.

Materials

Compost Filter Socks

- Compost Filter Sock materials and compost material shall be in accordance with AASHTO Designation: MP 9-06 (2007 or latest revision). Compost material shall also meet all applicable Federal and State Regulations.

- For compost filter socks 18 inches or less in diameter, wooden stakes shall be 1 inch by 1 inch, at 10-foot intervals on center, and of a length that shall project into the soil 1 foot leaving 3 inches to 4 inches protruding above the filter sock.
- For compost filter socks greater than 18 inches in diameter wooden stakes shall be 2 inch by 2 inch, at 10 foot intervals on center, and of a length that shall project into the soil 1 foot leaving 3 inches to 4 inches protruding above the filter sock.

Design Criteria

General

- Design computations are not required for installations of 1 month or less. Longer installation periods should be designed for expected runoff.
- Sensitive areas may require the use of reinforced or multiple materials.

Straw Wattles and Fiber Rolls

- Straw Wattles and Fiber Rolls have a very limited sediment capture zone.
- Straw Wattles and Fiber Rolls should not be used on slopes subject to creep, slumping, or landslide.

Compost Filter Socks

- Larger diameter filter socks are recommended for areas prone to high rainfall or sites with severe grades or long slopes. Coarser compost products are generally used in regions subject to high rainfall and runoff conditions.
- Compost socks can be useful in protecting areas where trenching is difficult.
- Compost socks maybe left in place permanently depending upon location, such as a mid slope break. In this case they should be vegetated during installation.
- Compost sock material may require design consideration. The material maybe permanent, photodegradable or biodegradable depending upon intended use and longevity.

Installation Requirements

General

- All sediment barriers shall be placed as close to the disturbed areas as possible, but at least 10 feet from the toe of a slope to allow for maintenance and roll down.
- The area beyond the fence must be undisturbed or stabilized.

Straw Wattles and Fiber Rolls

- On slopes, install fiber rolls along the contour with a slight downward angle at the end of each row to prevent ponding at the midsection (California Straw Works, 2005). Turn the ends of each fiber roll upslope to prevent runoff from flowing around the roll. Install fiber rolls in shallow trenches dug 3 to 5 inches deep for soft, loamy soils and 2 to 3 inches deep for hard, rocky soils.
- For soft, loamy soils, place the rows closer together. For hard, rocky soils, place the rows farther apart. Stake fiber rolls securely into the ground and orient them perpendicular to the slope. Biodegradable wood stakes or willow cuttings are recommended. Drive the stakes through the middle of the fiber roll and deep enough into the ground to anchor the roll in place. About 3 to 5 inches of the stake should stick out

above the roll, and the stakes should be spaced 3 to 4 feet apart. A 24-inch stake is recommended for use on soft, loamy soils. An 18-inch stake is recommended for use on hard, rocky soils.

- Compost socks require no anchor trench, therefore, soil is not disturbed upon installation. Since compost filter socks do not have to be trenched into the ground, they can be installed on frozen ground or even cement.
- The preferred anchoring method is to drive stakes through the center of the wattle, tube, or roll at regular intervals (typically staked in every three to four feet); alternatively, stakes can be placed on the downstream side of the wattle, tube or roll.
- The ends of the wattle, tube or roll should be directed upslope, to prevent stormwater from running around the end of the sock.
- Fiber rolls are not effective unless trenched.
- Fiber rolls can be difficult to move once saturated.
- If not properly staked and entrenched, fiber rolls can be transported by high flows.
- Straw Wattles and Fiber Rolls must be set in a 2-3" furrow in the soil and staked

Compost Filter Socks

- Trenching is not required. Compost filter socks shall be placed over the top of ground, wooden stakes shall be driven through the center of the filter socks to anchor them to the ground. To ensure optimum performance, heavy vegetation shall be cut down or removed, and extremely uneven surfaces shall be graded to ensure that the compost filter sock uniformly contacts the ground surface.
- Compost tubes may be vegetated by incorporating seed into the compost, prior to placing it in the tube.
- Compost Filter Socks require no trenching in, but must be staked.
- Installation: No trenching is required; therefore, soil is not disturbed upon installation. Once the filter sock is filled and put in place, it should be anchored. The preferred anchoring method is to drive stakes through the center of the sock at regular intervals; alternatively, stakes can be placed on the downstream side of the sock. The ends of the filter sock should be directed upslope, to prevent stormwater from running around the end of the sock. The filter sock may be vegetated by incorporating seed into the compost when filling the filter sock.
- Since compost filter socks do not have to be trenched into the ground, they can be installed on frozen ground, pavement or cement. For placement on pavement or cement concrete blocks can placed to hold the sock in place.

Inspection, Maintenance, and Removal Requirements

General

- Remove all devices once permanent erosion control practices are in place and functioning unless devices are designed to remain in place (i.e. compost filter socks with seed).

Straw Wattles and Fiber Rolls

- Straw Wattles and Fiber Rolls are usually left along slopes and are biodegradable
- Sediment removal and disposal are still required in areas where sediment accumulates to at least one-half the distance between the top of the fiber roll or wattle and the ground surface.

Compost Filter Socks

- Compost filter socks should be inspected regularly, as well as after each rainfall event, to ensure that they are intact and the area behind the sock is not filled with sediment.
- If the filter sock was overtopped during a storm event, the operator should consider installing an additional filter sock on top of the original, placing an additional filter sock further up the slope, or using an additional BMP in conjunction with the sock(s).
- Inspect compost socks regularly, and after each rainfall event, to ensure that they are intact and functioning correctly.
- Remove sediment that builds up behind the sock before it interferes with the functionality of the sock.
- Deposit the removed sediment within the project limits or dispose of legally so that the sediment is not subject to erosion by wind or by water.
- Repair or replace split, torn, or unraveling socks. Replace broken or split stakes. Sagging or slumping compost socks must be repaired with additional stakes or replaced. Repair or replace at locations where rills and other evidence of concentrated runoff have occurred beneath the socks.

Straw Bale

(Photo Credit:US EPA)

Definition

- A straw bale barrier is a temporary entrenched and anchored barrier used to intercept sediment-laden runoff and to provide some retention of sediment from small drainage areas.

Purpose

- Used to promote sheet flow and to reduce runoff velocity, thus reducing erosion and improving water quality.

Applicability

- Slope Protection for disturbed areas where Straw bale barriers may be used for areas draining 1 acre or less and where runoff water velocities are not expected to exceed 2 cubic feet per second.

- Stockpile management perimeter protection - Straw bale barriers should be used around or downslope of soil stockpiles.

- Pumping Settling Basins.

Planning and Design Requirements

Bales shall be a minimum of 30 inches long and a minimum of 14" tall by 18" wide. Bale weight shall not be less than 50 pounds and shall be bound with no less than two strings or wires and contain as a minimum five (5) cubic feet of material. . The useful life span is normally 3 months[6], therefore straw bales <u>must be replaced</u> or a new barrier placed

[6] Straw bales have a useful life of three months while hay bales have a useful life of one month or less. The difference between hay bales and straw bales derives from what they are made of. Hay bales are comprised primarily of grasses. These grasses still have grain or seeds attached and if not certified as noxious weed-free, they might have undesirable effects by spreading invasive plants.

directly upslope of the old when a barrier is required for longer time periods.

Recommended maximum size of the drainage area is 0.25 acres per 100 feet of straw bale barrier fence length; the maximum length of slope behind the fence is 100 feet; and the maximum slope length for given slopes is as follows:

SLOPE	SLOPE LENGTH
< 2%	**100 ft**
2 to 5%	**75 ft**
5 to 10%	**50 ft**
10 to 20%	**25 ft**
> 20%	**15 ft**

Straw bales should be certified as to being noxious weed-free bales. To be "Certified" means that a product is free of any noxious weeds.

A number of certified noxious weed-seed-free programs are based on weed-free forage standards set by the North American Weed Management Association (NAWMA - http://www.nawma.org).

NAWMA provides a list of noxious weeds found in North America and many states start with that list and add other noxious weeds found in their states as qualifying factors. Many states accept these minimum standards.

Installation Requirements

A 4 to 6 inch deep trench should be excavated to the length of the barrier and the width of the bale, as shown in Figure 7. Excavated material is to be placed on the upstream side of the trench. Wire or string-bound bales containing a minimum 5 cubic feet of straw are placed in the trench and should be anchored by two 1" x 1" wooden oak stakes that are three (3) feet long or #4 rebar steel pickets driven through the bale into the underlying soil at a slight upstream angle, as illustrated in Figure 8, to help prevent the bale from overturning. All rebar stakes must be capped with a safety cap. The first stake should also be driven slightly toward the previously laid bale to force them together. Spacing between the bales should be tightly chinked with loose straw (note Figure 7). The excavated soil can now be backfilled firmly against the upslope side and compacted.

Inspection, Maintenance, and Removal Requirements

Bale barriers should be inspected immediately after each rainfall or daily during periods of prolonged rainfall. Damaged bales and undercutting or flow channels around the ends of barriers should be repaired or corrected as soon as possible. Sediment deposits should be removed after each rainfall, and accumulations should be removed when they

---

Straw bales are comprised of only the stalks of plants, such as grain plants.

reach 1/2 the height of the barrier.

After all sediment-producing areas have been permanently stabilized, all sediment accumulation at the barrier trap should be removed, and all excavation should be backfilled and properly compacted and stabilized. Smooth the site to blend with the terrain or as specified on plans.

Common Problems for inspection:

- Drainage area too large; break up into smaller areas.
- Too much sediment accumulation allowed before clean out; too much sediment accumulation may cause barrier to fail.
- Upstream slope too steep or too long; break up length with additional rows of barriers.
- Undercutting occurs; bales were not trenched at least 4 inches or compacted properly.
- Loose spots or spacings not tightly chinked with loose hay; this may result in insufficient trap efficiency.
- Erosion around barrier ends due to endpoints being lower than top of temporary pool elevation; reshape ends to elevation above pool level.

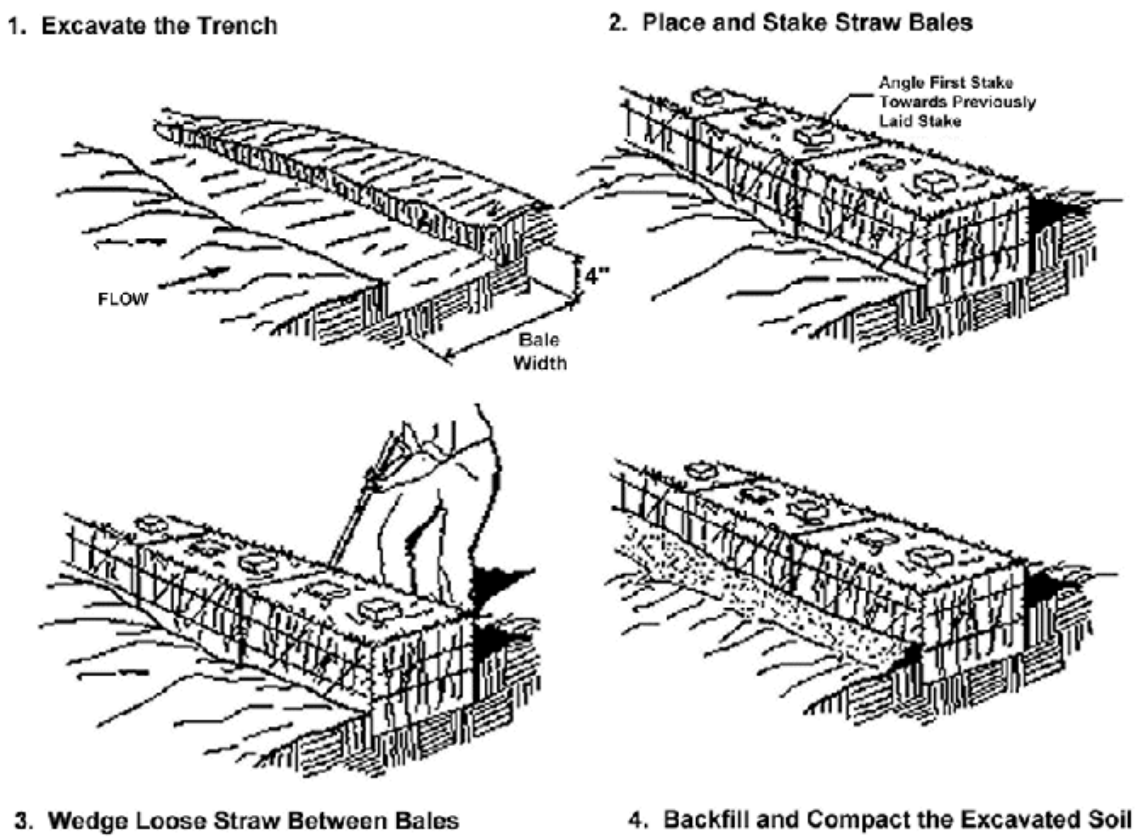

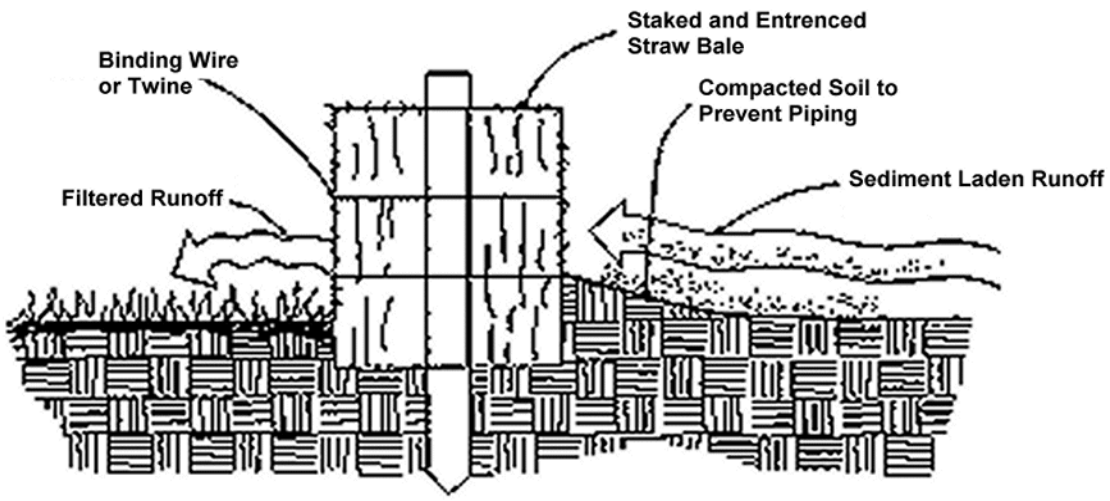

REFERENCES

Maryland Department of the Environment, Soil Conservation Service, and State Soil Conservation Committee. 1983. 1983 Maryland Standards and Specifications -- For Soil Erosion and Sediment Control. Maryland Department of the Environment, Baltimore, Maryland.

Oklahoma County Conservation District, Oklahoma Conservation Commission, and Soil Conservation Service. 1988. Erosion and Sediment Control on Urban Areas. Oklahoma County Conservation District, Oklahoma City, Oklahoma.

Tennessee Department of Transportation, Bureau of Highways Nashville. 1981. Standard Specifications for Road and Bridge Construction. March 1, 1981. Sections 209.02 (c and g) and 209.07 (c and g).

U.S. Department of Agriculture, Soil Conservation Service. 1987. District of Columbia 1987 Standards and Specifications for Soil Erosion and Sediment Control. Department of Consumer and Regulatory Affairs, Environmental Control Division, Soil Resources Branch, Washington, D.C.

Virginia Department of Conservation and Recreation, Division of Soil and Water Conservation. 1992. Virginia Soil and Erosion Control Manual, Third Edition. Virginia Department of Conservation and Recreation, Division of Soil and Water Conservation Commission, Richmond, Virginia

Turbidity Curtains

(Photo Credit: MACC)

Definition

- A flexible, impenetrable barrier (or "curtain") that is weighted at the bottom to achieve closure while supported at the top through a flotation system.

Purpose

- To prevent the migration of silt from a work site in a water environment into the larger body of water.

Applicability

- Used when construction activity occurs within a waterbody or along its shoreline and is of short duration, generally less than one month.
- Curtains are used in calm waters.
- Not for use across flowing watercourses.

Planning and Design Requirements

- The turbidity curtain shall be located beyond the lateral limits of the construction site. The alignment should be set as close to the work area as possible but not so close as to be disturbed by applicable construction equipment.
- The height of the curtain shall be 20 percent greater than the depth of the water to allow for water level fluctuations.
- The area that the turbidity curtain protects shall not contain large culverts or drainage areas that if flows occur behind the curtain would cause a breach or lost contact at the bottom surface.
- If water depths at the design alignment are minimal, the toe can be anchored in place by staking.
    - Choosing the correct turbidity curtain is highly dependent on several different site conditions including water flow/current speed, waves (height, frequency), wind (speed, direction), job type, and job duration. After site conditions have been assessed, curtain materials can then be chosen to match the requirements of a location.
    - At a minimum, the curtain material shall be supported by a flotation

material having over 29 lbs/ft buoyancy. The floating curtain shall have a 5/16" galvanized chain as ballast and dual 5/16" galvanized wire ropes with a heavy vinyl coating as load lines.

- The curtain material shall be made of a tightly woven nylon, plastic or other non-deteriorating material meeting the following specifications:

Property	Value
Grab tensile strength	*md-370 lbs *cd-250 lbs
Mullen burst strength	480 psi
Trapezoid tear strength	*md-100 lbs *cd-60 lbs
Apparent opening size	70 US standard sieve
Percent open area	4% permittivity 0.28 sec-1

*md - machine direction
*cd - cross machine direction

In the event that more than one width of fabric is required, a 6" overlap of the material shall also be required.

Installation Requirements

- The area of proposed installation of the curtain shall be inspected for obstacles and impediments that could damage the curtain or impair its effectiveness to retain sediment.
- All materials shall be removed so they cannot enter the waterbody.
- The curtain shall be firmly anchored in place. Shallow installations can be made by securing the curtain by staking rather than using a flotation system. Supplemental anchors of the turbidity curtain toe shall be used, as needed, depending on water surface disturbances such as boats and wave action by winds.

Inspection, Maintenance, and Removal Requirements

- The turbidity curtain shall be inspected daily and repaired or replaced immediately.
- If the curtain is oriented in a manner that faces the prevailing winds, frequent checks of the anchorage shall be made.
- It is not normally necessary to remove sediment deposited behind the curtain; but, when necessary, removal is usually done by hand prior to removal of the barrier. All removed silt is stabilized away from the waterbody. Sediment removal will be at the direction of the regulatory agency.
- The barrier shall be removed by carefully pulling it toward the construction site to minimize the release of attached sediment. Any floating construction or natural debris shall be immediately removed to prevent damage to the curtain.

Containment Areas for Earth Materials

(Photo Credit: Montana BMP Field Guide)

Definition

- A procedure that uses a perimeter earthen berm and excavation to create a containment area where excessively wet soil is placed to allow for the draining of water or evaporation of excessive moisture.

Purpose

- To provide a containment area large enough to allow for sufficient water to drain from the soil so that it may be regraded or transported.

Applicability

- When excavating saturated soils that are too wet to be transported or to be contained with geotextile silt fence.
- Not for dewatering contaminated soils. Handling of contaminated soils shall comply with the directives of the regulating agency (e.g., RIDEM and EPA).

Note: A Professional Engineer is required only if: (1) the berm for the containment area exceeds 3 feet in height above stripped, natural or original ground, or (2) the volume of materials needing dewatering exceeds 200 cubic yards at any one time. Use standard engineering measures.

Planning and Design Requirements

Site Selection

- Select a containment site that will be large enough to contain the anticipated volume of material to be dewatered and any perimeter berm.
- Locate the containment area so that the material being dewatered does not interfere with other construction activities and can be left for the time necessary for dewatering.
- Avoid wetlands, watercourses, drainage ways and wooded areas.
- Sandy and gravelly material will generally dewater quicker than fine silts and clays, particularly if the containment area is gently sloping.
- The containment area can be divided into cells to allow for alternating use of the cells.

Design Criteria

- Size the containment area by the volume and type of material to be dewatered and the length of time that the material will remain stockpiled. Design the containment berm to withstand any anticipated loads.
- Select a site where the slope is 8% or flatter. Do not locate on previously filled ground unless approved by the site engineer. Give preference to sites with well drained soils. An underdrain may be needed to improve the dewatering function of a containment area located on poorly drained soils.

Installation Requirements

- Strip and stockpile the topsoil from the containment area.
- Divert surface water away from containment area as necessary (See **Diversions**).
- Construct the berm (**Figures 1 and 2**) around the containment area with suitable soils. Certain types of soils are subject to instability upon saturation or loading and must be avoided. Examples of these soils include fine sands, silt loams, clay, peat and mucks. Sites containing such soils may require the borrowing of more suitable material from off site for berm construction.
- Install a geotextile silt fence to filter the discharge from the disturbed area if an inadequate vegetated filter exists between the disturbed containment area and any wetland, watercourse or storm drain inlet. (See **Silt Fence**).
- Place the saturated soil within the containment area such that drainage can occur.

Figure 1. Non-Engineered Dewatering Containment Area for Earth Materials

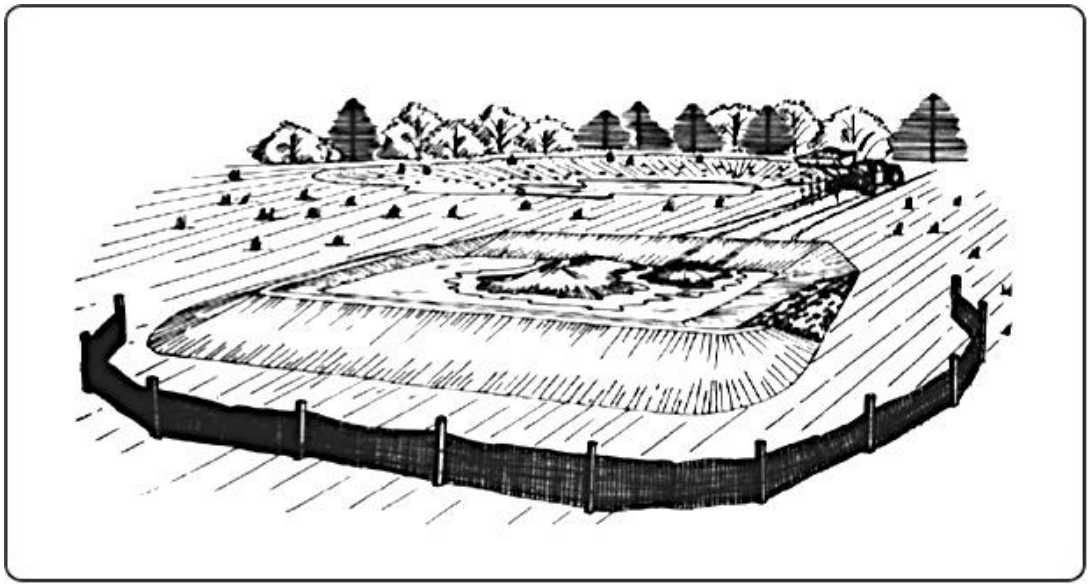

(Credit: *2002 Connecticut Guidelines for Soil Erosion and Sediment Control*)

Figure 2. Non-Engineered Dewatering Containment Area for Earth Materials

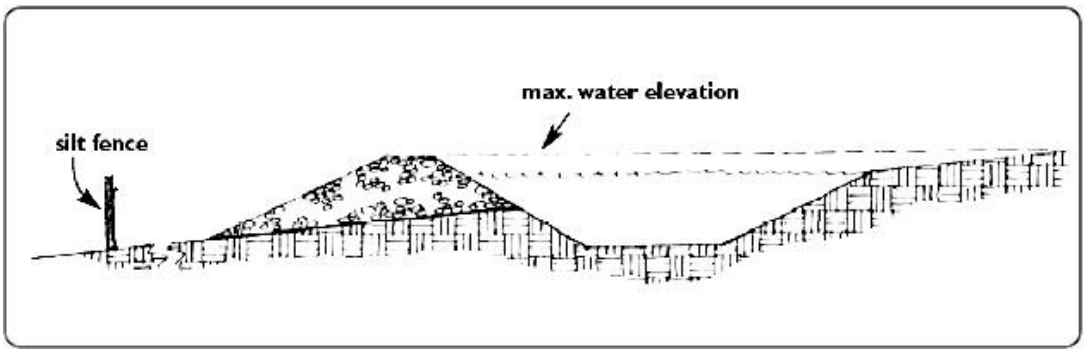

(Credit: *2002 Connecticut Guidelines for Soil Erosion and Sediment Control*)

Inspection, Maintenance, and Removal Requirements

Inspect containment area and associated sediment controls on a daily basis while dewatering operations are active. When dewatering operations are not active, inspect at least once every seven (7) calendar days and within twenty-four (24) hours after any storm event which generates at least 0.25 inches of rainfall per twenty four (24) hour period and/or after a significant amount of runoff.

If the containment berm fails, determine the cause of the failure. If the berm failed due to overtopping, repair the berm and any damage caused by the berm failure and reduce usage of the containment area such that overtopping is prevented. If the berm experienced an internal structural failure, cease using the containment area, add additional controls to contain eroded sediments, repair the damage caused by berm failure, and before repairing the berm have the dewatering operation reviewed by an engineer for repair requirements. Repair and clean out perimeter erosion and sediment controls as needed.

Portable Sediment Tanks and Bags

(Photo Credit: MACC ESC Guide)

Definition

- "Frac tanks" are impermeable containers into which sediment laden water is pumped and temporarily stored while settling and fractionation is achieved.
- Dewatering bags are made from durable geotextile filter fabric suitable for removal of sediment, and designed to accommodate discharge pipes. They may be placed in dumpster or truck bed for ease of removal once sediment has been collected.

Purpose

- To trap and retain the sediment before the water is discharged or transported to an approved location for further treatment.

Applicability

- When a pump discharge from a construction area is sediment laden and space limitations prevent the use of a pumping settling basin;
- For sites with severe space limitations, a portable sediment tank may be used to transport the sediment laden water to an approved location;
- Typically used with cofferdam dewatering associated with bridge repair work, utility work or in the redevelopment of urban areas;
- Not for situations with high or continuous flows that will exceed the capacity of the tank(s).

Note: A professional engineer is required to assist with sizing the system.

Planning and Design Requirements

Planning Criteria

When a portable dewatering tank or bag is to be used next to a cofferdam, the weight of the tank and maximum volume of water and associated structures must be considered when constructing the cofferdam to ensure the structural stability of the cofferdam. Alternately, if the cofferdam has already been built, before placing any tank or bag adjacent to the cofferdam, consider the cofferdam's ability to remain structurally stable when the tank or bag is full.

Design Criteria

Tank Type

The tank is a structure constructed of steel, sturdy wood or other material suitable for handling the pressure exerted by the volume of water to be stored. An example of a typical sediment tank is shown in **Figure 1**. Other container designs may be used if the storage volume is adequate and is approved by the permitting authority. Former milk trucks or water trucks have been used for this purpose where off-site disposal has allowed for off-site dewatering basins or adequate filtration by vegetative buffers. Do not use a tank that was formerly used for contaminated or hazardous materials.

Figure 1. Portable Sediment Tank in Operation

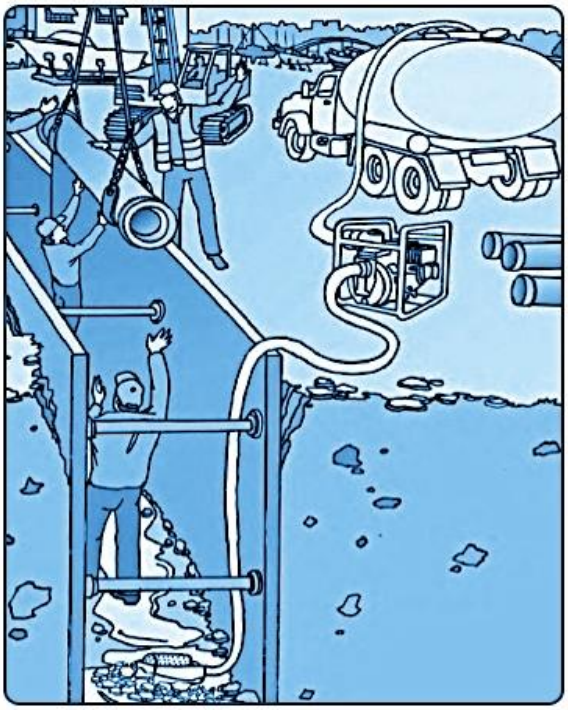

(Credit: *2002 Connecticut Guidelines for Soil Erosion and Sediment Control*)

Tank Size

For discharging the portable sediment tank directly, size the tank to have a minimum retention time of at least 2 hours. Use the following formula to determine the storage volume required:

Cubic feet of storage required = Pump Discharge Rate (g.p.m) x 16

When the tank size available is insufficient at the planned pumping rate, maximum pumping rate is determined from the following formula:

Pump Discharge Rate (g.p.m.) = Cubic feet of storage available/16

Number of Tanks

When pumping requirements are expected to exceed the two hour storage capacity of the sediment tank and pumping cannot be discontinued for the length of time needed to drain the tank properly at the pumping site, consider using two or more portable sediment tanks that may be alternately filled, moved and drained at an acceptable location.

Bag Size

Filter bags (**Figures 2)** should be sized based on:

- Volume and flow rate of sediment-laden water being pumped
- Quantity and type of sediment
- Permissivity of the given bag, log, or sock. A soil analysis along with hanging bag tests can determine the correct fabric and pore size necessary for the site-specific conditions.

Figure 2. Geotextile Dewatering Bag on Geotextile and Stone Pad

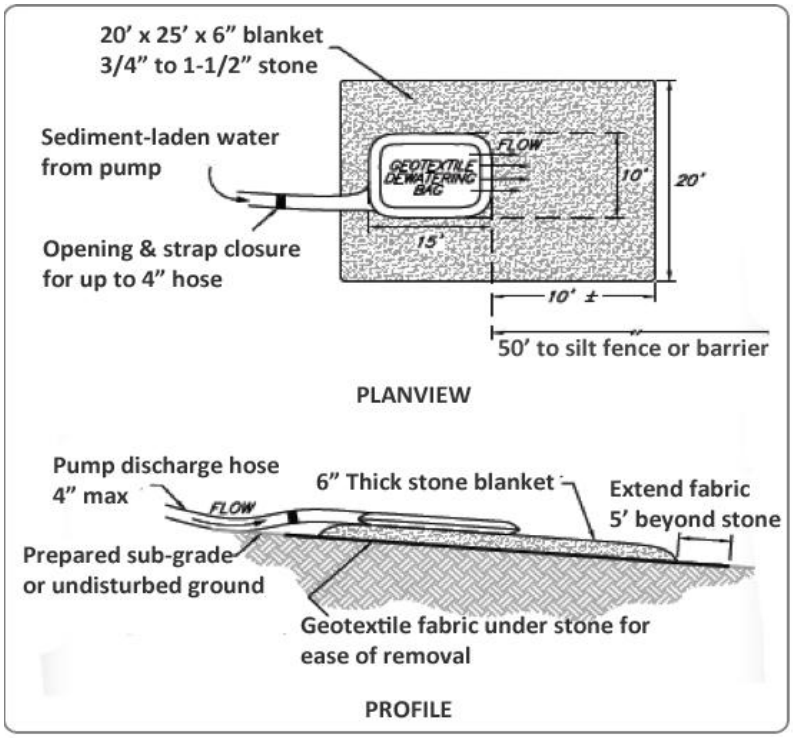

(Credit: *2002 Connecticut Guidelines for Soil Erosion and Sediment Control*)

Flocculants and Polymers

- Using flocculent or polymers to aid in the removal of for fine suspended sediments will improve flow rates, discharge clarity and percent of solids retained.
- An Erosion and Sedimentation Professional should be consulted to determine the most appropriate type and amount of flocculant or polymer needed for any specific job site or situation.
- Any use of treatment chemicals must be in accordance with **Appendix J, Chemical Treatment for Erosion and Sediment Control**.

Installation Requirements

Location

- Locate non-portable sediment tanks and bags for ease of clean-out and disposal of the trapped sediment, and to minimize the interference with construction activities and pedestrian traffic.

- Release filtrate from filter bags to an appropriate area or inlet (free of sensitive resources and hazards) that is stabilized against potential erosion and is able to be monitored.

Inlets and Outlets

- All pumps and pipes leading to tanks or bags must be able to be controlled with valves or manifolds.
- Discharge hoses must be inserted through appropriate openings and secured with wire, ties, clamps, rope or similar materials to create a good seal.
- Filter bags are susceptible to punctures, so care must be taken in their placement and use. A tarpaulin can alleviate some puncture possibilities
- The pump discharge into the tank shall be located at a point in the portable sediment tank that is farthest from the tank outlet.
- The outlet of the tank shall be equipped with an energy dissipater.

Inspection, Maintenance, and Removal Requirements

Tanks

- Inspect the sediment tank continuously during use.
- Once the water level nears the top of the tank, either shut off the pump while the tank drains and additional capacity is made available, or transport the tank to an appropriate disposal site.
- For a tank that is discharging water while the pumping operation is ongoing and when the wet storage area has lost one half of its volume to sediment build up, discontinue pumping and remove accumulated sediments or replace the tank.
- For a tank that is used to transport the pumped water to a location distant from the pumping operations, discontinue pumping long enough to change the tank.
- Any transported discharge of water and cleaning of the tank shall be done in such a manner as to prevent sediment laden water from reaching a wetland, stormwater collection system, watercourse or paved travelway.

Bags

- Inspect the sediment tank continuously during use.
- Care should always be taken to properly monitor performance to ensure that pump rates or concentrations of sediment are not excessive.
- Once the sediment tank or sediment bags have reached their maximum capacity to retain sediments, these units shall be taken offline and any retained sediments shall be disposed of properly.

Pumping Settling Basins

(Photo Credit: NY State Standards and Specifications for Erosion and Sediment Control, 2005)

Definition

- Pumping Settling Basins utilize an enclosed sediment barrier or excavated pit constructed with stable sides, an inlet and an outlet.

Purpose

- To allow for the settlement and/or filtering of turbid water from pumping operations prior to the water being discharged.

Applicability

- When a pump discharge from a construction area is sediment laden.
- Not for use with hydraulic dredging operations in open waters. **(See Containment Areas for Earth Materials).**

Note: A professional engineer is required for sizing the settling basins.

Planning and Design Requirements

Preliminary Actions

This measure is not needed if the pumped water is clear and sufficiently de-energized at the point of discharge. Similarly, a basin may not be needed if the volume of water is small and sufficient stable vegetative cover exists at the point of discharge to resist scour and adequately filter the discharged water before draining into a wetland, watercourse, storm drain system or public road.

Design Criteria

Design of pumping settling basins vary depending upon site conditions and type of operation. All dewatering basins, regardless of type, contain a water/sediment storage area and possibly:

- An energy dissipater for pump discharges entering the basin.
- An emergency overflow that provides for a stable filtration surface through which water may leave the basin.
- Soil stabilization measures, depending upon existing soil conditions and side slopes of excavated pumping settling basin.

An example of a pumping settling basin design is shown in **Figures 1**.

Figure 1. Pumping Settling Basin – Excavated with Straw Bale Barrier

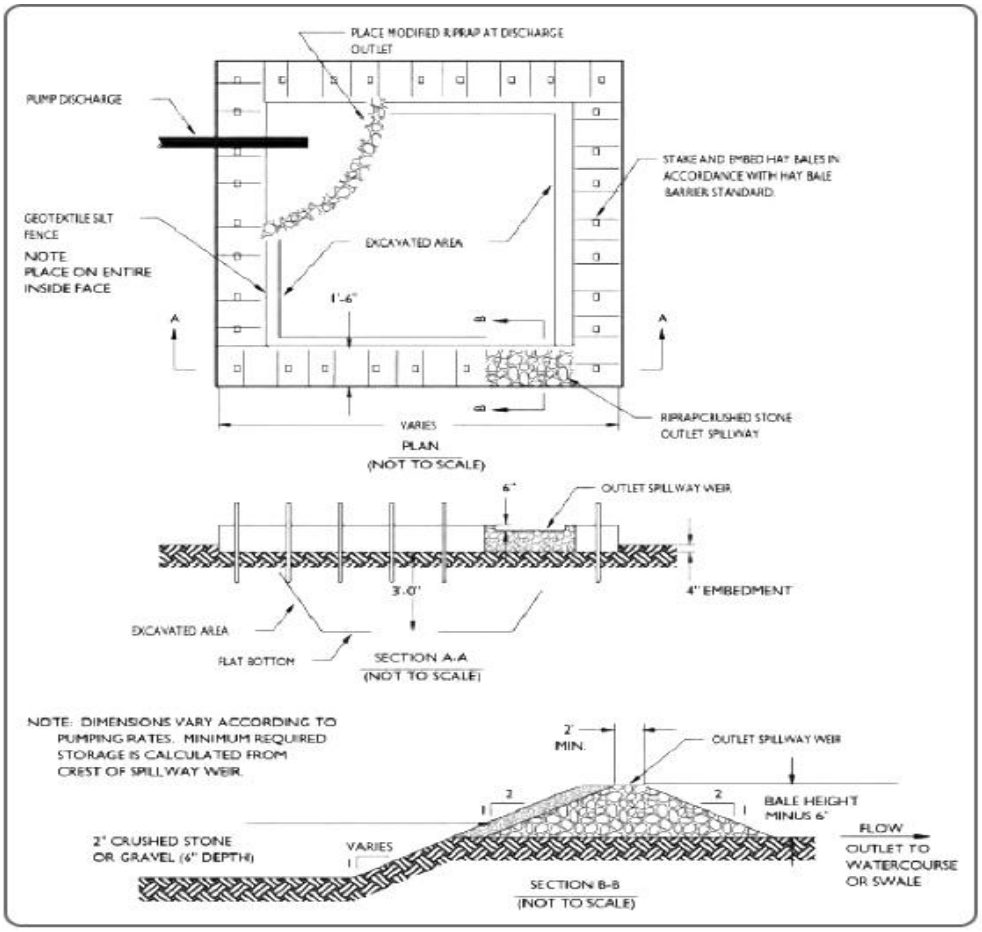

(Credit: NC DOT)

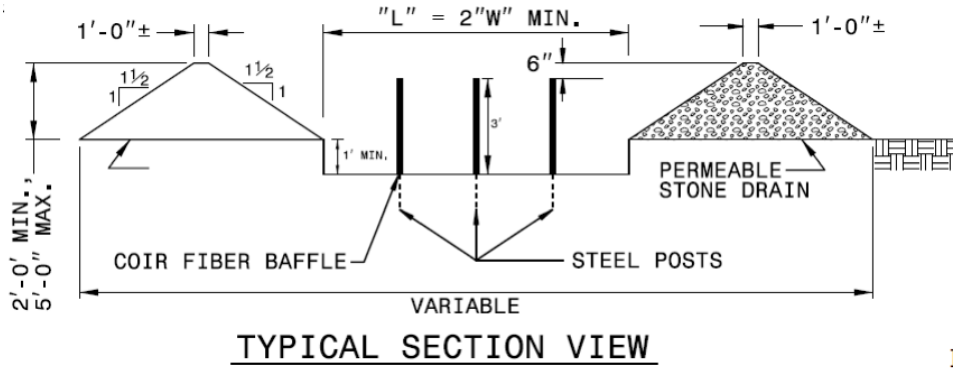

Locations

- Locate the pumping settling basin on the site such that surface water is directed away from the pumping settling basin **(See Diversions).**

- Pump discharge (basin inlet) must be located at a point in the dewatering basin that is farthest from the basin outlet.

Sizing

- Pumping settling basins are sized to have a minimum retention time of 2 hours. Use the following formula to determine the storage volume required:
- Cubic feet of storage required = Pump Discharge Rate (g.p.m.) x 16
- For sites where available storage is insufficient at the planned pumping rate, the maximum pumping rate is determined from the following formula:
  Pump Discharge Rate (g.p.m.) = Cubic feet of storage available/16
- In calculating the capacity, include the volume available from the floor of the basin to the crest of the outlet control.

Materials

- Geotextile shall meet that required in **Silt Fence, Straw Wattles, Compost Tubes and Fiber Rolls.**
- **Modified Riprap:** shall meet the requirements of RIDOT Standard Specifications for Road and Bridge Construction Subsection M.10.03.2.
- Straw bales must be weed free.

Inspection, Maintenance, and Removal Requirements

- The lifespan and maintenance frequency necessary to keep these functioning properly will vary greatly based on site-specific conditions.
- During the active dewatering process, the dewatering facility should be reviewed at least daily, with more frequent or continuous supervision as warranted by site conditions.
- Special attention should be paid to the outlet area for any sign of erosion or concentration of flow that may damage the buffer's vegetation or underlying soil.
- The visual quality of the effluent should be monitored to assess whether or not additional treatment may be necessary to prevent sedimentation of sensitive downstream receptors.
- At the conclusion of the dewatering process the pumping settling basin area must be cleaned of all accumulated sediments and fully stabilized in accordance with the approved plans.

Pump Intake Protection

(Photo Credit: MACC ESC Guide)

Definition

- Pump Intake Protection uses structures or other protective devices, such as barrels, boards, stones, strainers and floats, which are attached to intake and discharge hoses to prevent the excessive pumping of sediments at the intake and erosion at the point of discharge.

Purpose

- To reduce the amount of sediments taken up by a pump during dewatering operations.
- To prevent soil erosion due to scouring and the resuspension of detained sediments at the point of pump discharge.
- In some instances the pre-filtration of pump discharge waters may be enough to reduce or eliminate the need for a dewatering basin or portable sediment tank.

Applicability

- Wherever dewatering is required by means of pumping such as cofferdams, building foundations, utility line installation (or repair) and pond construction or rehabilitation.

Planning and Design Requirements

Multiple Design Options

There is no specific design for this measure. The pump intake protection shown in **Figure 1** illustrates basic design concepts which when implemented during dewatering operations reduce sediment uptake.

Sumps

Typically, pump intakes are installed in stone-filled sumps (**Figure 1)** that have been excavated below the grade such that water drains in from the active construction area, with a perforated standpipe, hose, or perforate pipe to extract the water. The sump may need to be lined with geotextile to preclude fines from getting into the pump. The location and size of sumps are dependent upon the field conditions found at the time of construction and dewatering operations. The expected conditions and potential sump needs should be noted on the plans. The sumps may

require relocation as work progresses. In some instances, the prefiltration of discharge waters may be enough to reduce or eliminate the need for a dewatering basin or portable sediment tank.

Figure 1. Pump Intake Protection Using Stone Filled Sump with Standpipe

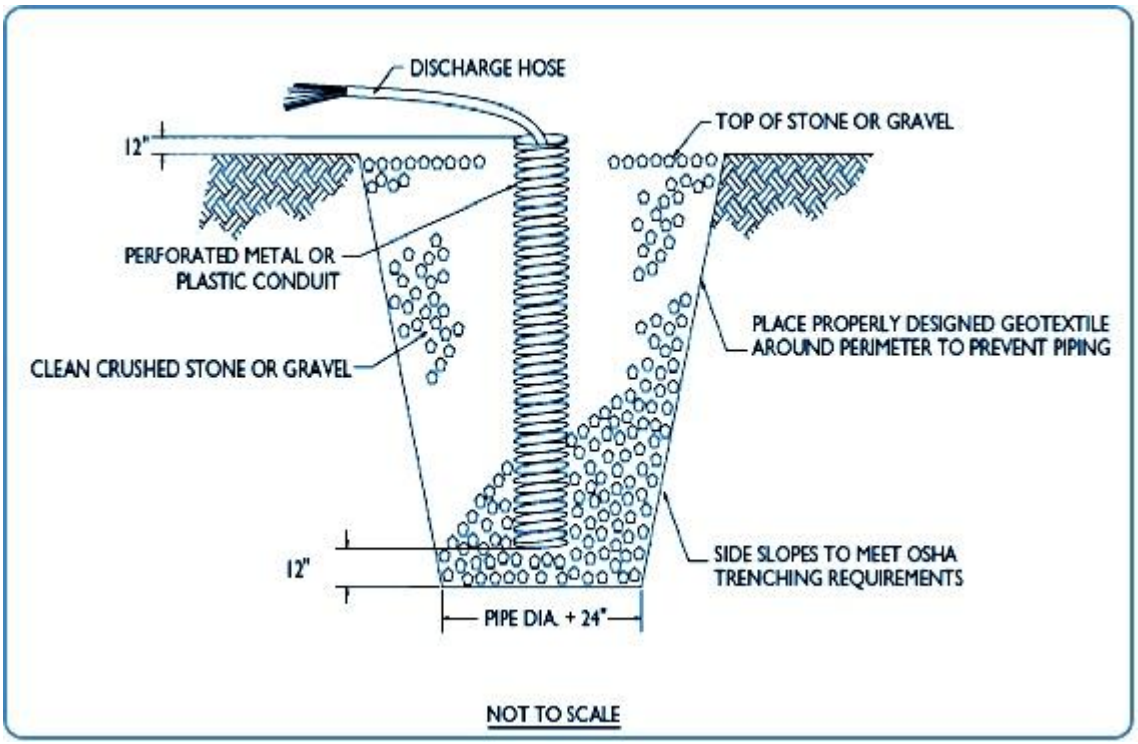

Some specifications call for lining (rather than filling) the pumping sump with stone and attaching a strainer to the suction hose so that the hose is suspended off the bottom of the pumping sump and is protected against pumping bottom sediments. This design is useful when frequent relocation of the pumping sump is anticipated.

Special Situations

- When using portable sediment storage tanks, the sump shall be capable of storing the amount of water that enters the dewatering site during the time that it takes to switch portable sediment storage tanks.
- For dewatering trenches, cofferdams and foundation excavations, the sump is typically excavated 2 feet or more below the grade of the proposed work.
- For pond rehabilitation the sump should be a minimum of 2 feet below the pond bottom, depending upon the dewatering needs of material to be removed from the pond. The size of the sump is dependent upon conditions in the pond.

Installation Requirements

- Where standing water is encountered in the area of a proposed sump, begin dewatering the site by floating the pump intake at the water's surface. Carefully monitor to prevent uptake of bottom sediments.
- Excavate the sump within or adjacent to the area to be dewatered. Install pump intake and outlet protection before pumping begins.

Inspection, Maintenance, and Removal Requirements

- Monitor pumping operations and adjust pumping rates as needed to keep the construction area dewatered, and minimize the pumping of sediment.
- Inspect the pumping sump, pump intake protection and pump discharge conditions frequently during dewatering operations for proper functioning of equipment.
- The lifespan and maintenance frequency necessary to keep these best management measures functioning properly will vary greatly based on site specific conditions. Frequent inspection and maintenance is required to minimize the pumping of sediment during dewatering operations.

SECTION SEVEN:
APPENDICES

Appendix A. Glossary ..... (1 - 18)
Appendix B. Model Ordinance: Erosion and Sediment Control ..... (1 - 13)
Appendix C. Request Form to Submit Updates to the Handbook ..... (1 - 2)
Appendix D. Subscription for Updates and other Notices for the Handbook ..... (1)
Appendix E. Model SESC Plan Templates ..... (1 - 44)
Appendix F. Site Constraint Maps ..... (1 - 2)
Appendix G. Spill Prevention, Control and Countermeasures Plans (SPCCP) ..... (1)
Appendix H. Soil Classification Systems ..... (1 - 3)
Appendix I. Revised Universal Soil Loss Equation -- RUSLE2 ..... (1 - 3)
Appendix J. Chemical Treatment for Erosion and Sediment Control ..... (1 - 5)
Appendix K. Turf Reinforcement Mats ..... (1)
Appendix L. Riprap ..... (1 - 3)
Appendix M. Gabions ..... (1 - 4)
Appendix N. Erosion Control Blankets (ECBs) ..... (1 - 3)
Appendix O. Earth Fill ..... (1 - 2)

Appendix A. Glossary

AGRICULTURAL RUNOFF – Runoff from land utilized for agricultural practices including growing crops and raising livestock.

AQUATIC BENCH - A ten- to fifteen-foot wide bench which is located around the inside perimeter of a permanent pool and is normally vegetated with aquatic plants; the goal is to provide pollutant removal and enhance safety in areas using stormwater ponds.

AQUIFER - A porous water-bearing formation of permeable rock, sand or gravel capable of yielding economically significant quantities of groundwater.

APPROVING AGENCY – An entity that will enforce or require compliance with the minimum standards in this manual.

AREA SUBJECT TO STORM FLOWAGE (ASSF) – a regulated wetland as defined in the Rhode Island DEM "Rules and Regulations Governing the Administration and Enforcement of the State Freshwater Wetlands Act."

BASEFLOW - The portion of streamflow that is not due to storm runoff but is the result of groundwater discharge or discharge from lakes or similar permanent impoundments of water.

BIORETENTION - A water quality practice that utilizes vegetation and soils to treat urban stormwater runoff by collecting it in shallow depressions, before filtering through an engineered bioretention planting soil media.

BUFFER - A buffer is a special type of preserved area along a watercourse or wetland where development is restricted or prohibited. Buffers protect and physically separate a resource from development. Buffers also provide stormwater control flood storage and habitat values. Wherever possible, riparian buffers should be sized to include the 100-year floodplain as well as steep banks and freshwater wetlands.

CATCH BASIN – A structure containing a sump placed below grade to conduct water from a street or other paved surface to the storm sewer.

CATCH BASIN INSERTS – A structure, such as a tray, basket, or bag that typically contains a pollutant removal medium (i.e., filter media) and a method for suspending the structure in the catch basin. They are placed directly inside of existing catch basins where stormwater flows into the catch basin and is treated as it passes through the structure.

CHANNEL - A natural stream that conveys water; a man-made ditch or swale excavated for the flow of water.

CHANNEL PROTECTION (CP_v) - A design criteria which requires 24-hour detention of the one-year, post-developed, 24-hour Type III storm event runoff volume for the control of stream channel erosion.

CHANNEL STABILIZATION - Erosion prevention and stabilization of velocity distribution in a channel using jetties, drops, revetments, structural linings, vegetation and other measures.

CHECK DAMS - Small temporary dams constructed across a swale or drainage ditch to reduce the velocity of concentrated stormwater flows.

CISTERNS – Containers that store larger quantities of rooftop stormwater runoff and may be located above or below ground. Cisterns can also be used on residential, commercial, and industrial sites. Also see Rain Barrel.

CLAY (SOILS) - 1. A mineral soil separate consisting of particles less than 0.002 millimeter in equivalent diameter. 2. A soil texture class. 3. (Engineering) A fine-grained soil (more than 50 percent passing the No. 200 sieve) that has a high plasticity index in relation to the liquid limit. (Unified Soil Classification System)

COMBINED SEWER OVERFLOWS (CSOs) – Combined sewers collect both stormwater runoff and sanitary wastewater in a single set of sewer pipes. When combined sewers do not have enough capacity to carry all the runoff and wastewater or the receiving water pollution control plant cannot accept all the combined flow, the combined wastewater overflows from the collection system into the nearest body of water, creating a CSO.

COMPACTION (SOILS) - Any process by which the soil grains are rearranged to decrease void space and bring them in closer contact with one another, thereby increasing the weight of solid material per unit of volume, increasing the shear and bearing strength and reducing permeability.

CONTOUR - 1. An imaginary line on the surface of the earth connecting points of the same elevation. 2. A line drawn on a map connecting points of the same elevation.

CRUSHED STONE – Gravel-sized particles that pass through a 3-inch sieve and are retained on the No. 4 sieve, and are angular in shape as produced by mechanical crushing. Crushed stone must be washed in order to be used in stormwater BMPs to prevent clogging by fines.

CURVE NUMBER (CN) - A numerical representation of a given area's hydrologic soil group, plant cover, impervious cover, interception and surface storage derived in accordance with Natural Resources Conservation Service methods. This number is used to convert rainfall volume into runoff volume.

CUT - Portion of land surface or area from which earth has been removed or will be removed by excavation; the depth below original ground surface to excavated surface.

DARCY'S LAW **–** An equation stating that the rate of fluid flow through a porous medium is proportional to the potential energy gradient within the fluid. The constant of proportionality is the hydraulic conductivity, which is a property of both the porous medium and the fluid moving through the porous medium. Sizing of filtering BMPs and dry swales is based on this principle.

DEEP SUMP CATCH BASINS - Storm drain inlets that typically include a grate or curb inlet and at least a four-foot sump to capture trash, debris and some sediment and oil and grease. Also known as an oil and grease catch basin.

DEICERS - Materials applied to reduce icing on paved surfaces. These consist of salts and other formulated materials that lower the melting point of ice, including sodium chloride, calcium chloride, calcium magnesium acetate, and blended products consisting of various combinations of sodium, calcium, magnesium, and chloride, as well as other constituents.

DESIGN POINTS/POINTS OF ANALYSES – Common locations at a site where pre-development and post-development conditions can be compared.

DESIGN STORM – Precipitation event for which the capacity of a best management practice is sized and designed. Design storms are expressed in terms of Type III, 24-hour events (i.e., 1-year, 10-year, and 100-year storms).

DETENTION - The temporary storage of storm runoff in a BMP with the goals of controlling peak discharge rates.

DETENTION STRUCTURE - A structure constructed for the purpose of temporary storage of surface runoff and gradual release of stored water at controlled rates.

DISPOSAL SITE - a structure, well, pit, pond, lagoon, impoundment, ditch, landfill or other place or area, excluding ambient air or surface water, where uncontrolled oil or hazardous material has come to be located as a result of any spilling, leaking, pouring, ponding, emitting, emptying, discharging, injecting, escaping, leaching, dumping, discarding or otherwise disposing of such oil or hazardous material. Disposal sites are designated as LUHPPLs.

DISTURBED AREA - An area in which the natural vegetative soil cover has been removed or altered and, therefore, is susceptible to erosion.

DIVERSION - A channel with a supporting ridge on the lower side constructed across the slope to divert water from areas where it is in excess to sites where it can be used or disposed of safely. Diversions differ from terraces in that they are individually designed.

DOWNSTREAM ANALYSIS - Calculation of peak flows, velocities, and hydraulic effects at critical downstream locations to ensure that proposed projects do not increase post-development peak flows and velocities at these locations.

DRAINAGE - The removal of excess surface water or ground water from land by means of surface or subsurface drains.

DRAINAGE AREA (WATERSHED) - All land and water area from which runoff may run to a common (design) point.

DRY EXTENDED DETENTION POND – Stormwater basin designed to capture, temporarily hold, and gradually release a volume of stormwater runoff to attenuate and delay stormwater runoff peaks. Dry extended detention ponds provide water quantity control (peak flow control and stream channel protection) as opposed to water quality control. Also known as “dry ponds” or “detention basins”.

DRY SWALE - An open drainage channel explicitly designed to detain and promote the filtration of stormwater runoff through an underlying fabricated soil media.

DRY WELL - Small excavated pits or trenches filled with aggregate that receive clean stormwater runoff primarily from building rooftops. Dry wells function as infiltration systems to reduce the quantity of runoff from a site. The use of dry wells is applicable for small drainage areas with low sediment or pollutant loadings and where soils are sufficiently permeable to allow reasonable rates of infiltration.

EMERGENCY SPILLWAY - An open and/or closed channel designed to safely discharge stormwater flows in excess of the principal spillway capacity.

EROSION - 1. The wearing away of the land surface by running water, wind, ice, or other geological agents, including such processes as gravitational creep. 2. Detachment and movement of soil or rock fragments by water, wind, ice or gravity. The following terms are used to describe different types of water erosion:

> Accelerated erosion - Erosion much more rapid than normal, natural or geologic erosion, primarily as a result of the influence of the activities of man or, in some cases, of other animals or natural catastrophes that expose base surfaces, for example, fires.
>
> Gully erosion - The erosion process whereby water accumulates in narrow channels and, over short periods, removes the soil from this narrow area to considerable depths, ranging from 1 or 2 feet to as much as 75 to 100 feet.
>
> Rill erosion - An erosion process in which numerous small channels only several inches deep are formed.
>
> Sheet erosion - The spattering of small soil particles caused by the impact of raindrops on wet soils. The loosened and spattered particles may or may not subsequently be removed by surface runoff.

EROSION AND SEDIMENT CONTROL (ESC) – A device placed, constructed on, or applied to the landscape that prevents or curbs the detachment of soil, its movement, and/or deposition.

EROSIVE VELOCITIES - Velocities of water that are high enough to wear away the land surface. Exposed soil will generally erode faster than stabilized soils. Erosive velocities will vary according to the soil type, slope, structural, or vegetative stabilization used to protect the soil.

EXFILTER - An exfilter is a conventional stormwater filter without an underdrain system. The filtered volume ultimately infiltrates into the underlying soils.

EXTENDED DETENTION (ED) - A stormwater design feature that provides for the gradual release of a volume of water over a 24- to 48-hour interval in order to increase settling of urban pollutants and protect downstream channels from frequent storm events.

FILTER STRIP - A strip of permanent vegetation above ponds, diversions and other structures to retard flow of runoff water, causing deposition of transported material, thereby reducing sediment flow.

FILTERING PRACTICES - Practices that capture and store stormwater runoff and pass it through a filtering media such as sand, organic material, or the native soil for pollutant removal. Stormwater filters are primarily water quality control devices designed to remove particulate pollutants and, to a lesser degree, bacteria and nutrients.

FLOODPLAIN - Areas adjacent to a stream or river that are subject to flooding or inundation during a storm event that occurs, on average, once every 100 years (or has a likelihood of occurrence of 1/100 in any given year).

FLOW SPLITTER - An engineered, hydraulic structure designed to divert a percentage of storm flow to a BMP located out of the primary channel, or to direct stormwater to a parallel pipe system, or to bypass a portion of baseflow around a BMP.

FOREBAY - Storage space located near a stormwater BMP inlet that serves to trap incoming coarse sediments before they accumulate in the main treatment area.

GRADE - 1. The slope of a road, channel or natural ground. 2. The finished surface of a canal bed, roadbed, top of embankment, or bottom of excavation; any surface prepared for the support of construction, like paving or laying a conduit. 3. To finish the surface of a canal bed, roadbed, top of embankment or bottom of excavation.

GRASS CHANNELS - Traditional vegetated open channels, typically trapezoidal, triangular, or parabolic in shape, whose primary function is to provide non-erosive conveyance, typically up to the 10-year frequency design flow. They provide limited pollutant removal through filtration by grass or other vegetation, sedimentation, biological activity in the grass/soil media, as well as limited infiltration if underlying soils are pervious.

GRAVEL - 1. “Pea” gravel is an aggregate consisting of mixed sizes of ¼-inch to 3/4-inch particles that normally occur in or near old streambeds and have been worn smooth by the action of water. Pea gravel is often used as a filter layer in stormwater BMPs. 2. According to the Unified Soil Classification System, gravel is a soil having particle sizes that pass through a 3-inch sieve and are retained on the No. 4 sieve; may be angular in shape as produced by mechanical crushing. Also, referred to as “crushed stone.” Crushed stone can be used as a media for stormwater best management practices (e.g., infiltration trenches, gravel wet vegetated treatment practices). 3. Type of impervious surface when used for road, driveway, or parking surfaces.

GREEN ROOFS - Multilayered, constructed roof systems consisting of a vegetative layer, media, a geotextile layer, and a synthetic drain layer installed on building rooftops. Rainwater is either intercepted by vegetation and evaporated to the atmosphere or retained in the substrate before being returned to the atmosphere through transpiration and evaporation.

GROUND COVER - Plants that are low growing and provide a thick growth that protects the soil as well as providing some beautification of the area occupied.

GROUNDWATER RECHARGE – The process by which water that seeps into the ground, eventually replenishing groundwater aquifers and surface waters such as lakes, streams, and the oceans. This process helps maintain water flow in streams and wetlands and preserves water table levels that support drinking water supplies.

GROUNDWATER RECHARGE VOLUME (Re_v) - The post-development design recharge volume (i.e., on a storm event basis) required to minimize the loss of annual pre-development groundwater recharge. The Re_v is determined as a function of annual pre-development recharge for site-specific soils or surficial materials, average annual rainfall volume, and amount of impervious cover on a site.

GULLY - A channel or miniature valley cut by concentrated runoff through which water commonly flows only during and immediately after heavy rains. The distinction between gully and rill is one of depth. A gully is sufficiently deep that it would not be obliterated by normal

tillage operations, whereas a rill is of lesser depth and would be smoothed by ordinary farm tillage.

HAZARD CLASSIFICATION (DAMS) - A rating for a dam that relates to the probable consequences of failure or misoperation of the dam, which is a determination made by the Director (of RIDEM) based on an assessment of loss of human life, damages to properties or structures located downstream of the reservoir, or loss of use as a drinking water supply. A higher hazard dam does not imply that it is more likely to fail or be misoperated than a lower hazard dam.

HEAD (HYDRAULICS) - 1. The height of water above any plane of reference. 2. The energy, either kinetic or potential, possessed by each unit weight of a liquid expressed as the vertical height through which a unit weight would have to fall to release the average energy possessed. Used in various terms such as pressure head, velocity head, and head loss.

HEAVY METALS - Metals such as copper, zinc, barium, cadmium, lead, and mercury, which are natural constituents of the Earth's crust. Heavy metals are stable and persistent environmental contaminants since they cannot be degraded or destroyed.

HERBACEOUS PERENNIAL (PLANTS) - A plant whose stems die back to the ground each year.

HYDROCARBONS – Inorganic compounds consisting of carbon and hydrogen, including petroleum hydrocarbons derived from crude oil, natural gas, and coal.

HYDRODYNAMIC SEPARATORS – A group of stormwater treatment technologies designed to remove large particle total suspended solids and large oil droplets, consisting primarily of cylindrical-shaped devices that are designed to fit in or adjacent to existing stormwater drainage systems. The most common mechanism used in these devices is vortex-enhanced sedimentation, where stormwater enters as tangential inlet flow into the side of the cylindrical structure. As the stormwater spirals through the chamber, the swirling motion causes the sediments to settle by gravity, removing them from the stormwater.

HYDROGRAPH - A graph showing variation in stage (depth) or discharge of a stream of water over a period of time.

HYDROLOGIC CYCLE – The distribution and movement of water between the earth's atmosphere, land, and water bodies.

HYDROLOGIC SOIL GROUP (HSG) - A Natural Resource Conservation Service classification system in which soils are categorized into four runoff potential groups. The groups range from A soils, with high permeability and little runoff production, to D soils, which have low permeability rates and produce much more runoff.

HYDROLOGIC ZONES – Planting zones that reflect the degree and duration of inundation by water, consisting of a deep water pool, shallow water bench, shoreline fringe, riparian fringe, floodplain terrace, and upland slopes.

ILLICIT DISCHARGES - Unpermitted discharges to waters of the state that do not consist entirely of stormwater or uncontaminated groundwater except certain discharges identified in the RIPDES Phase II Stormwater General Permit.

IMPAIRED WATERS – Those waterbodies not meeting water quality standards. Pursuant to Section 303(d) of the federal Clean Water Act, each state prepares a list of impaired waters (known as the 303(d) list) which is presented in the state's Integrated Water Report as Category 5 waters. Those impaired waters for which a TMDL has been approved by US EPA and is not otherwise impaired, are listed in Category 4A.

IMPERVIOUS COVER (I) - Those surfaces that cannot effectively infiltrate rainfall consisting of surfaces such as building rooftops, pavement, sidewalks, driveways, compacted gravel (e.g., driveways and parking lots).

INFILL – A development site that meets all of the following: the site is currently predominately pervious (less than 10,000 sf of existing impervious cover); it is surrounded (on at least three sides) by existing development (not including roadways); the site is served by a network of existing infrastructure and does not require the extension of utility lines or new public road construction to serve the property; and the site is one (1) acre or less where the existing land use is commercial, industrial, institutional, governmental, recreational, or multifamily residential.

INFILTRATION PRACTICES – Stormwater treatment practices designed to capture stormwater runoff and infiltrate it into the ground over a period of days.

INFILTRATION RATE (f_c) - The rate at which stormwater percolates into the subsoil measured in inches per hour.

LAND USE WITH HIGHER POTENTIAL POLLUTANT LOADS (LUHPPL) - Area where the land use has the potential to generate highly contaminated runoff, with concentrations of pollutants in excess of those typically found in stormwater.

LANDFILL - A facility or part of a facility established in accordance with a valid site assignment for the disposal of solid waste into or on land. Landfills are designated as LUHPPLs.

LEVEL SPREADER - A device for distributing stormwater uniformly over the ground surface as sheet flow to prevent concentrated, erosive flows and promote infiltration.

LIMIT OF DISTURBANCE – Line delineating the boundary of the area to be disturbed during a development or redevelopment project. Area outside this boundary shall not be touched.

LOW IMPACT DEVELOPMENT (LID) - Low impact development is a site planning and design strategy intended to maintain or replicate predevelopment hydrology through the use of site planning, source control, and small-scale practices integrated throughout the site to prevent, infiltrate and manage runoff as close to its source as possible.

MAXIMUM EXTENT PRACTICABLE – To show that a proposed development has met a standard to the maximum extent practicable, the applicant must demonstrate the following: (1) all reasonable efforts have been made to meet the standard in accordance with current local, state, and federal regulations, (2) a complete evaluation of all possible management measures has been performed, and (3) if full compliance cannot be achieved, the highest practicable level of management is being implemented.

"MAY" – This language is used when design guidance is recommended for consideration by the designer. Optional.

MICROPOOL - A smaller permanent pool that is incorporated into the design of larger stormwater ponds or WVTSs to avoid resuspension or settling of particles.

MULCH - A natural or artificial protective layer of suitable materials, usually of organic matter such as wood chips, leaves, straw, or peat, placed around plants that aids in soil stabilization, soil moisture conservation, prevention of freezing, and control of weeds. In addition, mulches serve as soil amendments upon decomposition (for organic mulches).

"MUST," "SHALL," "REQUIRED" – This language is used when a design standard or criterion is essential, not optional. A written technical justification acceptable to the approving agency must be provided if not used or achieved.

NATIVE PLANTS - Plants that are adapted to the local soil and rainfall conditions and that require minimal watering, fertilizer, and pesticide application.

NONPOINT SOURCE POLLUTION – Pollution caused by diffuse sources that are not regulated as point sources and are normally associated with precipitation and runoff from the land or percolation.

NON-STRUCTURAL CONTROLS – Pollution control techniques, such as management actions and behavior modification that do not involve the construction or installation of devices.

OFF-LINE - A stormwater management system designed to manage small storm events by diverting a percentage of stormwater flow away from the storm drainage system. Flow from large storm events will bypass this stormwater management system. See Figure H-5 for a graphic illustration "off-line."

OIL/PARTICLE SEPARATORS - Consist of one or more chambers designed to remove trash and debris and to promote sedimentation of coarse materials and separation of free oil (as opposed to emulsified or dissolved oil) from stormwater runoff. Oil/particle separators are typically designed as off-line systems for pretreatment of runoff from small impervious areas, and therefore provide minimal attenuation of flow. Also called oil/grit separators, water quality inlets, and oil/water separators.

ON-LINE - A stormwater management system designed to manage stormwater in its original drainage channel or pipe network such that all stormwater flow will be directed to and through the stormwater management system. See Figure H-5 for a graphic illustration "on-line."

OPEN CHANNELS - Also known as swales and grass channels. These systems are used for the conveyance, retention, infiltration and filtration of stormwater runoff.

OUTFALL - The point where water flows from a conduit, stream, or drain.

OUTLET - The point at which water discharges from stormwater practices such as pipes or channels.

OUTLET CONTROL STRUCTURE - A hydraulic structure placed at the outlet of a channel, spillway, pond, etc., for the purpose of dissipating energy, providing a transition to the channel or pipe downstream, while achieving the discharge rates for specified designs.

PEAK DISCHARGE RATE - The maximum instantaneous rate of flow during a storm, usually in reference to a specific design storm event.

PEAK FLOW CONTROL - Criteria intended to address increases in the frequency and magnitude of a range of potential flood conditions resulting from development and include stream channel protection, conveyance protection, peak runoff attenuation, and emergency outlet sizing.

PERFORMANCE MONITORING – Collection of data on the effectiveness of individual stormwater treatment practices.

PERMANENT (WET) POOL – An area of a stormwater management practice that has a fixed water surface elevation due to a manipulation of the outlet structure.

PERMEABILITY - The rate of water movement through the soil column under saturated conditions

PERMEABLE PAVING MATERIALS - Materials that are alternatives to conventional pavement surfaces and are designed to increase infiltration and reduce stormwater runoff and pollutant loads. Alternative materials include porous asphalt, pervious concrete, and various pavers and open-celled grids.

pH - A number denoting the common logarithm of the reciprocal of the hydrogen ion concentration. A pH of 7.0 denotes neutrality, higher values indicate alkalinity, and lower values indicate acidity.

PIPING - Removal of soil material through subsurface flow channels or “pipes” developed by seepage water.

PLUGS - Pieces of vegetation, usually cut with a round tube, which can be used to propagate the plant by vegetative means.

POINT SOURCE - any discernible, confined and discrete conveyance, including but not limited to, any pipe, ditch, channel, tunnel, conduit, well, discrete fissure, container, rolling stock, concentrated animal feeding operation, landfill leachate collection system, vessel or other floating craft from which pollutants are or may be discharged.

PONDSCAPING - Plantings around stormwater ponds that emphasizes native vegetative species to meet specific design intentions. Species are selected for up to six zones in the basin and its surrounding setback, based on their ability to tolerate inundation and/ or soil saturation.

PRETREATMENT - Techniques employed in stormwater BMPs to provide storage or filtering to help trap coarse materials before they enter the system.

PRINCIPAL SPILLWAY - An open and/or closed channel designed to allow a normal range of stormwater flows to discharge from an impoundment.

QUALIFYING PERVIOUS AREA – the generally flat, natural or landscaped vegetated areas that are fully stabilized and where discharge from impervious areas may be directed via sheet flow in order to obtain a Stormwater Credit. Specific criteria for qualifying pervious areas are included in Section 4.6.

RAIN BARRELS - Barrels designed to retain small volumes of runoff for reuse for gardening and landscaping. They are applicable to residential, commercial, and industrial sites and can be incorporated into a site's planting plan. The size of the rain barrel is a function of rooftop surface area and the design storm to be stored.

RATIONAL EQUATION – An empirical equation acceptable for estimating peak flow rates for small urbanized drainage areas with short times of concentration, but not for estimating runoff volume. The Rational Equation is Q=CiA, where Q = Peak discharge; C = Rational Method runoff coefficient; i = rainfall intensity (in/hr); and A = drainage area (acres).

REDEVELOPMENT – Any construction, alteration, or improvement that disturbs a total of 10,000 square feet or more of existing impervious area where the existing land use is commercial, industrial, institutional, governmental, recreational, or multifamily residential. Building demolition is included as an activity defined as "redevelopment", but building renovation is not. Similarly, removing of roadway materials down to the erodible soil surface is an activity defined as "redevelopment," but simply resurfacing of a roadway surface is not. Pavement excavation and patching that is incidental to the primary project purpose, such as replacement of a collapsed storm drain, is not classified as redevelopment. In general, the requirements in this manual do not apply to projects or portions of projects when the total existing impervious area disturbed is less than 10,000 square feet. However, specific regulatory programs may impose additional requirements. Any creation of new impervious area over portions of the site that are currently pervious is required to comply fully with the requirements of this manual, with the exception of infill projects.

REDOXIMORPHIC FEATURES - Features in the soil profile that are formed by the processes of reduction, translocation, and/or oxidation of iron and manganese oxides. They are an indicator of seasonal water table elevations.

RESPONSIBLE AUTHORITY – Authority responsible for long-term maintenance of stormwater BMPs.

RETENTION - The amount of precipitation on a drainage area that does not escape as runoff. It is the difference between total precipitation and total runoff.

RIGHT-OF-WAY (ROW) - Right of passage, as over another's property. A route that is lawful to use. A strip of land acquired for transport or utility construction.

RISER - A type of outlet control structure that consists of a vertical pipe that extends from the bottom of a pond BMP and houses the control devices (weirs/orifices) to achieve the discharge rates for specified designs.

RUNOFF - the water from rain, snowmelt, or irrigation that flows over the land surface and is not absorbed into the ground, instead flowing into surface waters or land depressions.

SAFETY BENCH - A flat area above the permanent pool and surrounding a stormwater basin designed to provide a separation from the basin pool and adjacent slopes.

SAND - 1. (Agronomy) A soil particle between 0.05 and 2.0 millimeters in diameter. 2. A soil textural class. 3. (Engineering) According to the Unified Soil Classification System, a soil particle larger than the No. 200 sieve (0.074mm) and passing the No. 4 sieve (approximately 1/4 inch).

SARA 312 GENERATOR - a facility that is required by the Emergency Planning and Community Right to Know Act (EPCRA), also known as Title III of the Superfund Amendments and Reauthorization Act of 1989 (SARA Title III), to submit an inventory of the location of hazardous chemicals which are located at the site. SARA 312 generators are designated as LUHPPLs.

SEASONAL HIGH GROUNDWATER TABLE – the elevation of the groundwater table during that time of the year at which it is highest as determined by direct observation or by interpretation of hydromorphic features in the soil profile.

SEDIMENT - Solid material, both mineral and organic, that is in suspension, is being transported, or has been moved from its site of origin by air, water, gravity, or ice and has come to rest on the earth's surface either above or below sea level.

SEDIMENT CHAMBER OR FOREBAY – An underground chamber or surface impoundment (i.e., forebay) designed to remove sediment and/or floatables prior to a primary or other secondary stormwater treatment practice.

SEEPAGE - 1. Water escaping through or emerging from the ground. 2. The process by which water percolates through the soil.

SETBACKS - The minimum distance requirements for location of a structural BMP in relation to roads, wells, septic fields, other structures. Also, the area immediately surrounding a best management practice that provides a separation barrier to adjacent development and acts as filter to remove pollutants and provide infiltration of stormwater prior to reaching the BMP.

SHALLOW WVTS – A WVTS that consists of aquatic vegetation within a permanent pool ranging in depth from 6" to 18" during normal conditions.

SHEET FLOW - Water, usually storm runoff, flowing in a thin layer over the ground surface.

"SHOULD" – This language is used in design guidance for a well-accepted practice, a satisfactory and advisable option or method. Optional, but subject to review by the approving agency.

SIDE SLOPES (ENGINEERING) - The slope of the sides of a channel, dam or embankment. It is customary to name the horizontal distance first, as 1.5 to 1, or frequently, 1 ½: 1, meaning a horizontal distance of 1.5 feet to 1 foot vertical.

SILT - 1. (Agronomy) A soil separate consisting of particles between 0.05 and 0.002 millimeter in equivalent diameter. 2. A soil textural class. 3. (Engineering) According to the Unified Soil Classification System a fine-grained soil (more than 50 percent passing the No. 200 sieve) that has a low plasticity index in relation to the liquid limit.

SITE – One or more lots, tracts, or parcels of land to be developed or redeveloped for a complex of uses, units or structures, including but not limited to commercial, residential, institutional, governmental, recreational, open space, and/or mixed uses. When calculating site size, jurisdictional wetland areas defined by DEM or CRMC regulations and undeveloped lands protected by conservation easements should be subtracted from the total site area.

SITE PLANNING AND DESIGN STRATEGIES – Techniques of planning, engineering, and landscape design that maintain predevelopment hydrologic functions and pollutant removal mechanisms to the extent practical.

SOIL TEST - Chemical analysis of soil to determine needs for fertilizers or amendments for species of plant being grown.

SOURCE CONTROLS - Practices to limit the generation of stormwater pollutants at their source.

STABILIZATION - Providing adequate measures, vegetative and/or structural that will prevent erosion from occurring.

STAGE (HYDRAULICS) - The variable water surface or the water surface elevation above any chosen datum.

STORMWATER – Water consisting of precipitation runoff or snowmelt.

STORMWATER BASIN - A land depression or impoundment created for the detention or retention of stormwater runoff.

STORMWATER FILTERING - Stormwater treatment methods that utilize an artificial media to filter out pollutants entrained in urban runoff.

STORMWATER MANAGEMENT PLAN - Plan describing the proposed methods and measures to prevent or minimize water quality and quantity impacts associated with a development project both during and after construction. It identifies selected LID source controls and treatment practices to address those potential impacts, the engineering design of the treatment practices, and maintenance requirements for proper performance of the selected practices.

STORMWATER POLLUTION PREVENTION PLAN (SWPPP) - Identifies potential sources of pollution and outlines specific management activities designed to minimize the introduction of pollutants into stormwater.

STORMWATER RETROFITS – Modifications to existing development to incorporate source controls and structural stormwater treatment practices to remedy problems associated with and improve water quality mitigation functions of older, poorly designed, or poorly maintained stormwater management systems.

STORMWATER TREATMENT TRAIN - Stormwater treatment practices, as well as site planning techniques and source controls, combined in series to enhance pollutant removal or achieve multiple stormwater objectives.

STREAM BUFFERS - Zones of variable width that are located along both sides of a stream and are designed to provide a protective natural area along a stream corridor.

STREAM ORDER – Stream order indicates the relative size of a stream based on Strahler's (1957) method. Streams with no tributaries are first-order streams, represented as the start of a solid line on a 1:24,000 USGS Quadrangle Sheet. A second-order stream is formed at the confluence of two first-order streams. However, if a first-order stream joins a second-order stream, it remains a second-order stream; it is not until a second-order stream combines with

another second-order stream that it becomes a third-order stream, and so on. Peak flow controls (CP_v and Q_p) are waived for discharges to fourth-order and larger streams. Appendix I includes a description and a map of all fourth-order and larger streams in Rhode Island.

STREET SWEEPER – Equipment that removes particulate debris from roadways and parking lots. Includes mechanical broom sweepers, vacuum sweepers, regenerative air sweepers, and dry vacuum sweepers.

STRUCTURAL BMPs - Devices that are constructed to manage stormwater runoff.

SUBGRADE - The soil prepared and compacted to support a structure or a pavement system.

SUBWATERSHED - The area draining to the point of confluence between two first-order tributaries.

TECHNICAL RELEASE No. 55 (TR-55) - A watershed hydrology model developed by the Soil Conservation Service (now NRCS) used to calculate runoff volumes and provide a simplified routing for storm events through ponds.

TEMPORARY SEEDING - A seeding which is made to provide temporary cover for the soil while waiting for further construction or other activity to take place.

TIME OF CONCENTRATION - Time required for water to flow from the most remote point of a drainage area, in a hydraulic sense, to the point of analysis.

TOE (OF SLOPE) - Where the slope stops or levels out. Bottom of the slope.

TOKEN SPILLWAYS – Also known as emergency spillways, these are placed above the water elevation of the largest managed storm and are required if not already provided as part of the conveyance of the 100-year storm event.

TOPSOIL - Fertile or desirable soil material used to top dress road banks, subsoils, parent material, etc.

TOTAL MAXIMUM DAILY LOAD (TMDL) - A calculation of the maximum amount of a pollutant that a water body can receive and still meet water quality standards, and an allocation of that amount to the pollutant's sources, including a margin of safety.

TOTAL NITROGEN (TN) – The sum of total Kjeldahl nitrogen, nitrate, and nitrite. Nitrogen is typically the growth-limiting nutrient is estuarine and marine systems.

TOTAL PHOSPHORUS (TP) – Sum of orthophosphate, metaphosphate (or polyphosphate) and organically bound phosphate. Phosphorus is typically the growth-limiting nutrient is freshwater systems.

TOTAL SUSPENDED SOLIDS (TSS) - The total amount of soils particulate matter that is suspended in the water column.

TRASH RACK - Grill, grate, or other device at the intake of a channel, pipe, drain or spillway for the purpose of preventing oversized debris from entering the structure and clogging the outlet weir/orifice.

ULTRA-URBAN - Densely developed urban areas in which little pervious surface exists.

UNDERGROUND DETENTION FACILITIES - Vaults, pipes, tanks, and other subsurface structures designed to temporarily store stormwater runoff for water quantity control and to drain completely between runoff events. They are intended to control peak flows, limit downstream flooding, and provide some channel protection.

UNDERGROUND INFILTRATION SYSTEMS – Structures designed to capture, temporarily store, and infiltrate the water quality volume over several days, including premanufactured pipes, vaults, and modular structures. Used as alternatives to infiltration trenches and basins for space-limited sites and stormwater retrofit applications.

URBAN STORMWATER RUNOFF - Stormwater runoff from developed areas.

VELOCITY HEAD - Head due to the velocity of a moving fluid, equal to the square of the mean velocity divided by twice the acceleration due to gravity (32.16 feet per second per second).

WATER BALANCE – Equation describing the input, output, and storage of water in a watershed or other hydrologic system.

WATER QUALITY SWALES - Vegetated open channels designed to treat and attenuate the water quality volume and convey excess stormwater runoff. Dry swales are primarily designed to receive drainage from small impervious areas and rural roads. Wet swales are primarily used for highway runoff, small parking lots, rooftops, and pervious areas.

WATER QUALITY VOLUME (WQ_v) -The storage needed to capture and treat 90% of the average annual stormwater runoff volume. In Rhode Island, this equates to 1-inch of runoff from impervious surfaces.

WATERSHED INCHES - Watershed inches are used to compare stormwater volume requirements between sites of varying sizes. Required volumes in acre-feet can be converted to watershed inches by dividing by the total site area in acres and multiplying by 12 inches/feet.

WATERSHED MANAGEMENT **-** Integrated approach addressing all aspects of water quality and related natural resource management, including pollution prevention and source control.

WET SWALE - An open drainage channel or depression, explicitly designed to retain water or intercept groundwater for water quality treatment.

WET VEGETATED TREATMENT SYSTEMS (WVTS) - Shallow, constructed pools that capture stormwater and allow for the growth of characteristic emergent vegetation.

XERISCAPING - Planting to minimize water usage (“xeri” is the Greek prefix meaning ”dry”) by using plants that are adapted to the local climate and require minimal watering, fertilizer, and pesticide application, and improving soils by adding soil amendments or using mulches to reduce the need for watering by increasing the moisture retained in the soil.

Topsoil - Fertile and desirable soil material used to top-dress exposed subsoil or parent material, etc. Topsoil typically has a soil organic matter (SOM) content between 5 and 10 percent by dry weight.

Compost - means a well cured soil amending material resulting from the aerobic thermophilic, microbial processing of organic materials resulting in a material that meets the definition of Class "A" Compost, as defined in Regulation 8.01 of the Solid Waste Regulations. Resulting materials will have < 1% by weight of foreign matter within it.

Existing/Native Topsoil – In-situ soil material, whether in a managed agricultural or natural setting, where all surface tier horizons, including any existing duff or organic layers remain in place or in agricultural settings the plowed topsoil horizon has not been regraded or stripped.

Amended topsoil - mixture of compost, as defined above and existing/native and/or imported earth materials with a USDA texture ranging in texture from sand to sandy loam which, after blending meets the soil component material specifications.

Organic matter is carbon-containing material composed of both living organisms and formerly living decomposing plant and animal matter. A subset of this pool referred to as soil organic matter or SOM consists mostly of humic substances and excludes living roots and undecomposed plant residual matter. The SOM content of a soil can be supplemented with compost or other partially decomposed plant material. Soil organic matter content is commonly measured using "loss on ignition" tests that measure the change in weight of an air-dried sample after carbon compounds are burned off. This test may be unreliable for use in soils where the parent material contains carboniferous minerals (e.g. graphite schist) as commonly associated with sedimentary rock in the Narragansett Basin.

Table 1-1 Key Abbreviations and Acronyms Cited in the Manual

Acronym	Term
A	Area
A_s	Sediment forebay surface area
AASHTO	American Association of State Highway and Transportation Officials
ac	Acre
ac-ft	Acre-feet
ACI	American Concrete Institute
ASTM	American Society of Testing and Materials
BMP	Best management practice
BOD	Biological Oxygen Demand
C	Flow-weighted mean concentration of the pollutant in urban runoff (mg/L)
C'	Flow-weighted mean bacteria concentration (#col/100 ml)
cfs	Cubic feet per second
CN	Curve number
COD	Chemical Oxygen Demand

col/100 ml	Bacteria colonies/100 milliliters
CP_v	Channel protection storage volume
CRMC	Rhode Island Coastal Resources Management Council
csm/in	cfs per square mile per inch
Cu	Copper
CWP	Center for Watershed Protection
DEM	Rhode Island Department of Environmental Management
DO	Dissolved Oxygen
DOH	Rhode Island Department of Health
DOT	Department of Transportation
E	Removal efficiency
E_{TSS}	Removal efficiency of total suspended solids
ED	Extended detention
EIC	Effective impervious area
EOEA	Executive office of Environmental Affairs
EPA	U.S. Environmental Protection Agency
ESC	Erosion and Sediment Control
ETV	EPA's Environmental Technology Verification Program
F	Recharge Factor
f_c	Soil infiltration rate
FC	Fecal coliforms
fps	Feet per second
GW	Groundwater
h:v	Horizontal to Vertical
HDPE	High Density Polyethelene
HECRAS	Hydraulic Engineering Center - River Analysis System
HSG	Hydrologic soil group
I	Impervious area
%I	Percent impervious area
I_a	Initial abstraction
K	Coefficient of permeability
L	Stormwater pollutant export load (pounds or billion colonies)
LID	Low impact development
LUHPPL	Land use with higher potential pollutant loads
MASTEP	Massachusetts Stormwater Technology Evaluation Project

μg/l	Micrograms per liter
mg/l	Milligrams per liter
MS4	Municipal separate storm sewer system
MSGP	Multi-sector General Permit
n	Porosity
N/A	Not applicable
NAPA	National Asphalt Pavement Association
NCDC	National Climatic Data Center
ND	No data
NPDES	National Pollutant Discharge Elimination System
NRCS	Natural Resources Conservation Service
NT	No treatment
o.c.	On-center
O/M	Operation and maintenance
OSHA	Occupational Safety and Health Administration
OWTS	Onsite wastewater treatment system
P	Precipitation depth
Pb	Lead
Pj	Rainfall correction factor
PCB	Polychlorinated biphenyls
PE	Professional Engineer
ppm	Parts per million
PVC	Polyvinyl chloride
Q	Flow rate
q_I	Peak inflow discharge
q_O	Peak outflow discharge
Q_p	Overbank flood protection storage volume
Q_{peak}	Peak discharge flow rate
q_u	Unit peak discharge (csm/inch)
QPA	Qualifying Pervious Area
Re_a	Recharge area
Re_v	Recharge volume
Rv	Runoff coefficient expressing the fraction of rainfall converted to runoff
RIDOT	Rhode Island Department of Transportation
RIPDES	Rhode Island Pollutant Discharge Elimination System

ROW	Right-of-way
SAMP	Special Area Management Plan
SCS	Soil Conservation Service
SD	Separation distance
sf	Square feet
SHGT	Seasonal high groundwater table
SMP	Stormwater Management Plan
SWMM	Stormwater Management Model
SWPPP	Stormwater Pollution Prevention Plan
T	Extended detention time
t_c	Time of concentration
TAP	Technology Assessment Protocol
TARP	Technology Acceptance and Reciprocity Partnership
TER	Technology Evaluation Report
TMDL	Total Maximum Daily Load
TN	Total nitrogen
TP	Total phosphorus
TR-20	NRCS Technical Release No. 20 Project Formulation – Hydrology
TR-55	NRCS Technical Release No. 55 Urban Hydrology for Small Watersheds
TSS	Total suspended solids
UIC	Underground Injection Control
UNHSC	University of New Hampshire Stormwater Center
USDA	United States Department of Agriculture
V_r	Runoff volume from a given storm event
V_s	Required storage volume for facility sizing
VOCs	Volatile organic compounds
WQ_f	Water quality flow
WQ_v	Water quality storage volume
WSE	Water surface elevation
WT	Water table
WVTS	Wet vegetated treatment system
Zn	Zinc

Appendix B. Model Ordinance: Erosion and Sediment Control

Recommended Modifications to Meet Phase II MS4 Permit Requirements

Southern Rhode Island Conservation District and
URI Cooperative Extension NEMO program
August 2009

Introduction

Rhode Island municipalities are required, under the Storm Water Phase II General Permit for Small Municipal Separate Storm Sewer Systems (MS4), to implement a program to reduce pollutants in stormwater runoff from construction activities that result in disturbance of one acre or more. This guidance uses the model ordinance provided as part of the Soil Erosion and Sediment Control enabling legislation, Title 45, Chapter 45-46-5, as the context for suggested modifications to meet the minimum requirements of the MS4 permit. Since the legislation was enacted in 1982, most RI cities and towns have adopted erosion controls based on this model ordinance. Some communities adopted the model "as is" or with minor variations while others made more substantial revisions to suit local needs. These provisions were incorporated into local codes through ordinances, subdivision and land development regulations, and/or zoning.

This guidance offers recommended modifications to fill gaps in the current model, addressing minimum MS4 permit requirements in key areas, including:

- control of construction wastes;
- consideration of water quality impacts in site plan review;
- strengthened site inspection and enforcement procedures; and
- coordination with state permit review and approval procedures

It should be noted that some standards of the original model ordinance are more protective than the MS4 permit requirements. In these cases, the modifications suggested retain the same provisions, without substituting minimum MS4 permit requirements, to provide a high level of protection.

It is our intent that municipalities will find the following annotated ordinance useful in either updating soil erosion and sediment controls, or reviewing adopted standards to verify conformance with permit requirements. Institutional MS4s are also likely to find the guidance useful in developing enforceable policies. As with any municipal ordinance or regulations, review by legal counsel is recommended.

Key to annotations
- Recommended modifications to meet minimum Phase II requirements are in **red, bold, underlined text.**
- Deletions to the original are in ~~red, strike-out text.~~
- Other notes, comments and example language are in **[blue, bold, italic text within brackets].**

Annotated Model Erosion and Sediment Control Ordinance
Recommended Modifications to Meet Phase II MS4 Permit Requirements

Base: RI General Law, TITLE 45 CHAPTER 45-46 SECTION 45-46-5
§ 45-46-5 Model ordinance – Soil erosion and sediment control.

ARTICLE I

Section 1. Purpose.

(a) The (city or town) council finds that excessive quantities of soil are eroding from certain areas that are undergoing development for non agricultural uses such as housing developments, industrial areas, recreational facilities, and roads. This erosion makes necessary costly repairs to gullies, washed out fills, roads, and embankments. The resulting sediment clogs the storm sewers and road ditches, muddies streams, leaves deposits of silt in ponds and reservoirs, and is considered a major water pollutant. [Construction debris, litter and spills also clog the storm water management system and contaminate surface and ground water.]

(b) The purpose of this ordinance is to [East Greenwich adds "to control the discharge of construction waste and"] prevent soil erosion and sedimentation from occurring as a result of non agricultural development within the city or town by requiring proper provisions for water disposal, construction waste management and the protection of soil surfaces during and after construction, in order to promote the safety, public health, and general welfare of the city or town.

ARTICLE II

Section 1. Applicability.

This ordinance is applicable to any situation involving any disturbance to the terrain, topsoil or vegetative ground cover upon any property within the city or town of]]]]]]]] after determination of applicability by the building official or his or her designee based upon criteria outlined in article III.
Compliance with the requirements as described in this ordinance shall not be construed to relieve the owner/applicant of any obligations to obtain necessary state or federal permits.

ARTICLE III

Section 1. Determination of applicability.

(a) It is unlawful for any person to disturb any existing vegetation, grades, and contours of land in a manner which may increase the potential for soil erosion, [East Greenwich changes this to "in a manner that may affect the quality of storm water discharges associated with the construction activity"] without first applying for a determination of applicability from the building official or his or her designee except that the following activities shall be determined to be subject to the requirements of this ordinance: all activities disturbing a total area equal to or greater than one acre[7], including disturbances less than one acre if part of a larger common plan; and any activity that requires permit approval by either the RIDEM or CRMC.

Upon determination of applicability, the owner/applicant shall submit a soil erosion and sediment control plan for approval by the building official or his or her designee, as provided in article IV.

[7] Throughout this document, this term shall include disturbances less than one acre if part of a larger common plan

The application for determination of applicability shall describe the location, nature, character, and time schedule of the proposed land disturbing activity in sufficient detail to allow the building official or his or her designee to determine the potential for soil erosion and sedimentation resulting from the proposed project. In determining the applicability of the soil erosion and sediment control ordinance to a particular land disturbing activity, the building official or his or her designee shall consider site topography, drainage patterns, soils, proximity to watercourses, and other information deemed appropriate by the building official or his or her designee. Where less than a total of one acre is disturbed, a particular land disturbing activity shall not be subject to the requirements of this ordinance if the building official or his or her designee finds that erosion resulting from the land disturbing activity is insignificant and represents no threat to adjacent properties or to the quality of any coastal feature or watercourse, as defined in Article IX. The current "Rhode Island Soil Erosion and Sediment Control Handbook," prepared by the U.S. department of agriculture ~~soil~~ natural resources conservation service, R.I. department of environmental management, and R.I. state conservation committee shall be consulted in making this determination.

In making this determination, the building official will also take into consideration the sensitivity of the waterbody to which the site drains. A waterbody and its watershed will be considered sensitive if a Total Maximum Daily Load or Special Area Management Plan is written or under development for it, or it is included on RIDEM's 303(d) list, or is included on RIDEM's list of Special Resource Protection Waters (Appendix G of the Water Quality Regulations), or has been noted by the municipality to be of special concern.

(2) This ordinance shall not apply to existing quarrying operations actively engaged in excavating rock but shall apply to sand and gravel extraction operations.

(b) No determination of applicability is required for the following:

(1) Construction, alteration, or use of any additions to existing single family or duplex homes or related structures; provided, that the grounds coverage of addition is less than one thousand (1,000) square feet, and construction, alteration and use does not occur within one hundred (100') feet of any watercourse or coastal feature [Middletown & Bristol use 200'], and the slopes at the site of land disturbance do not exceed ten percent (10%) [Johnston uses 8%].

(2) Use of a home garden in association with onsite residential use.

(3) Accepted agricultural management measures such as seasonal tilling and harvest activities associated with property utilized for private and/or commercial agricultural or silvicultural purposes.

(4) Excavations for improvements other than those described in subsection (b)(1) of this section which exhibit all of the following characteristics:

(i) Does not result in a total displacement of more than fifty (50) cubic yards of material;

(ii) Has no slopes steeper than ten feet (10') vertical in one hundred feet (100') horizontal or approximately ten percent (10%); and

(iii) Has all disturbed surface areas promptly and effectively protected to prevent soil erosion and sedimentation.

(5) Grading, as a maintenance measure, or for landscaping purposes on existing developed land parcels or lots; provided, that all bare surface is immediately seeded, sodded or otherwise protected from erosive actions, and all of the following conditions are met:

(i) The aggregate area of activity does not exceed two thousand (2,000) square feet; and

(ii) The change of elevation does not exceed two feet (2') at any point; and

(iii) The grading does not involve a quantity of fill greater than eighteen (18) cubic yards; except where fill is excavated from another portion of the same parcel and the quantity does not exceed fifty (50) cubic yards.

(6) Grading, filling, removal, or excavation activities and operations undertaken by the city or town under the direction and supervision of the director of public works for work on streets, roads, or rights-of-ways dedicated to public use; provided, that adequate and acceptable erosion and sediment controls [East Greenwich adds "and controls for other construction wastes"] are incorporated, in engineering plans and specifications, and employed. Appropriate controls apply during construction as well as after the completion of these activities. All work shall be undertaken in accordance with the performance principles provided for in Article V, Section 1(c) and the standards and definitions that may be adopted to implement the performance principles.

ARTICLE IV

Section 1. Provisions of plan – Procedures.

(1) To obtain approval for a land disturbing activity as found applicable by the building official or his or her designee under article III, an applicant shall first file an erosion and sediment control plan if the site is less than one (1) acre in size, or if the site is a total of one (1) acre or greater in size they shall submit a Stormwater Pollution Prevention Plan (SWPPP) signed by the owner of the property, or authorized agent, on which the work subject to approval is to be performed. The plan or drawings, as described in article V, shall include proposed erosion and sediment control and waste management measures to be employed by the applicant or the applicant's agent.

[Note: some municipalities, such as Lincoln, refer to all plans for construction site control as a SWPPP and no longer refer to soil erosion and sediment control plans.]

(2) R.I. Freshwater Wetlands Permit: Where any portion of a proposed development requires approval under any provision of the general laws approved by the general assembly or where the approval contains provisions for soil erosion and sediment controls, that approved plan shall be a component of the overall soil erosion and sediment control plan or SWPPP required under this ordinance for the development.

(3) Construction General Permit: In those cases where a SWPPP is submitted, the applicant will also submit a copy of the Notice of Intent.

[Note: when less than 1 acre, basic E/S plan may be required by municipality; when 1-5 acres, NOI must be submitted to RIDEM, and SWPPP prepared but not submitted; when > 5 acres must also submit SWPPP to RIDEM . For projects > 1 acre, local E/S Plan and SWPPP requirements should be the same so one plan can be submitted to municipality and state.]

The city or town adopting this ordinance may collect fair and reasonable fees from each applicant requesting approval of a soil erosion and sediment control plan for the purposes of administering this ordinance.

(1) Within five (5) working days [Woonsocket & Pawtucket made this 10 days] of the receipt of a completed plan, the building official or his or her designee shall send a copy of the plan to the review authorities which may include the public works department, the planning board or planning department, and conservation commission for the purpose of review and comment. The building official or his or her designee may also, within five (5) working days, submit copies of the plan to other local departments or agencies, including the conservation district that services their county, in order to better achieve the purposes of this chapter. Failure of these review authorities to respond within twenty-one (21) days [Pawtucket & Bristol made this15 days] of their receipt of the plan shall be deemed as no objection to the plan as submitted.

(2) The time allowed for plan review shall be commensurate with the proposed development project, and shall be done simultaneously with other reviews. [Bristol adds "The submittal of plans for review shall amount to acknowledgement and authorization from the applicant for municipal officials to enter upon and inspect private property where work is proposed for the purpose of reviewing site conditions as they relate to soil erosion, surface water runoff, and sediment control."]

(1) The building official or his or her designee shall take action in writing, either approving or disapproving the plan, with reasons stated within ten (10) days after the building official has received the written opinion of the review authorities. [Newport states no building permit issued until this written approval is presented.]

(2) In approving a plan, the building official or his or her designee may attach conditions deemed reasonably necessary by the review authorities to further the purposes of this ordinance. The conditions pertaining to erosion and sediment control measures and/or devices, may include, but are not limited to, the erection of walls, drains, dams, and structures, planting vegetation, trees
and shrubs, furnishings, necessary easements, and specifying a method of performing various kinds of work, and the sequence or timing of the work. The applicant/owner shall notify the building inspector, or his or her designee, in advance [Woonsocket requires 72 hours advance notice, Bristol requires 48 hours] of his or her intent to begin clearing and construction work described in the erosion and sediment control plan or SWPPP. The applicant shall have the erosion
and sediment control plan or SWPPP on the site during grading and construction [East Greenwich simply says "for the duration of the project"].

(1) Administrative procedures: (A) If the ruling made by the building official or his or her designee is unsatisfactory to the applicant/owner, the applicant/owner may file a written appeal. The appeal of plans for soil erosion and sediment control shall be to the zoning board of review or other appropriate board of review, as determined by the city or town council.

(B) Appeal procedures shall follow current requirements for appeal to the above-mentioned boards.

(C) During the period in which the request for appeal is filed, and until the time that a final decision is rendered on the appeal, the decision of the building official or his or her designee remains in effect.

(2) Expert opinion: The official, or his or her designee, the zoning board of review, or other board of review, may seek technical assistance on any soil erosion and sediment control plan. The expert opinion must be made available in the office of the building official, or his or her designee, as a public record
prior to the appeals hearing.

ARTICLE V.
Section 1. Soil Erosion and Sediment Control Plan, and Stormwater Pollution Prevention Plan.

The erosion and sediment control plan and/or Stormwater Pollution Prevention Plan shall be prepared by a registered engineer, or landscape architect or a ~~soil and water conservation society~~ CPESC, Inc. certified erosion and sediment control specialist, and copies of the plan shall be submitted to the building official or his or her designee.

The erosion and sediment control plan or Stormwater Pollution Prevention Plan shall include sufficient information about the proposed activities and land parcels to form a clear basis for discussion and review and to assure compliance with all applicable requirements of this chapter. The erosion and sediment control plan for proposed activities disturbing a total of one (1) acre or greater shall be prepared in conformance with the requirements for a Storm Water Pollution Prevention Plan (SWPPP), as provided in the RI Department of Environmental Management's General Permit for Storm Water Discharge Associated with Construction Activity. For sites disturbing less than one acre, the ~~The~~ plan shall be consistent with the data collection, data analysis, and plan preparation guidelines in the current "Rhode Island Soil Erosion and Sediment Control Handbook," prepared by the U.S. department of agriculture, ~~soil~~ natural resources conservation service, R.I. department of environmental management, R.I. state conservation committee, and at a minimum, shall contain:

(1) A brief narrative describing the proposed land disturbing activity and the soil erosion and sediment control measures, waste management measures and stormwater management measures to be installed to control erosion that could result from the proposed activity.

[Middletown adds, "and a description of any potential sources of pollution that may be expected to affect the quality of storm water discharges from the site"]

Supporting documentation, such as a drainage area, existing site, and soil maps shall be provided as required by the building official or his or her designee.

(2) Construction drawings in detail commensurate with the size of the project, sensitivity of the potentially impacted waterbody and distance to water and/or storm sewer system. These drawings will illustrat~~eing~~ ~~in detail~~ existing and proposed contours, drainage features, and vegetation; limits of clearing and grading, the location of soil erosion and sediment control and stormwater management measures, detail drawings of measures; stock piles and borrow areas; waste collection and burial areas; concrete truck wash out sites; sequence and staging of land disturbing activities; and other information needed for construction.

(3) A schedule showing the sequence of construction and inspection and maintenance of erosion and sediment control and waste control measures.

[Newport adds descriptions of erosion and sediment controls, and description of maintenance procedures to its list of plan requirements.]

(4 ~~3)~~ All applicants shall provide other ~~Other~~ information or construction plans and details as deemed necessary by the building official or his or her designee for a thorough review of the plan prior to action being taken as prescribed in this chapter. Withholding or delay of information may be reasons for the building official or his or her designee to judge the application as incomplete and providing grounds for disapproval of the application.

The contents of the erosion and sediment control plan shall clearly demonstrate how the principles, outlined in this subsection, have been met in the design and are to be accomplished by the proposed development project.

(1) The site selected shall show due regard for natural drainage characteristics and topography.

(2) To the extent possible, steep slopes shall be avoided.

(3) The grade of created slopes shall be minimized.

(4) Post development runoff rates should not exceed pre development rates, consistent with other stormwater requirements which may be in effect. Any increase in storm runoff shall be retained and recharged as close as feasible to its place of origin by means of detention ponds or basins, seepage areas, subsurface drains, porous paving, or similar technique.
[Bristol adds provisions for a watershed of special concern]

(5) Original boundaries, alignment, and slope of watercourses within the project locus shall be preserved to the greatest extent feasible.

(6) In general, drainage shall be directed away from structures intended for human occupancy, municipal or utility use, or similar structures.

(7) All drainage provisions shall be of a design and capacity so as to adequately handle stormwater runoff, including runoff from tributary upstream areas which may be outside the locus of the project.

(8) Drainage facilities shall be installed as early as feasible during construction, prior to site clearance, if possible.
[Bristol adds that they must be operational prior to increase in impervious area]

(9) Fill located adjacent to watercourses shall be suitably protected from erosion by means of riprap, gabions, retaining walls, vegetative stabilization, or similar measures.
[Woonsocket simply states that no fill shall be located adjacent to a watercourse]

(10) Temporary vegetation and/or mulching shall be used to protect bare areas and stockpiles from erosion during construction; the smallest areas feasible shall be exposed at any one time; disturbed areas shall be protected during the
non growing months, November through March.

(11) Permanent vegetation shall be placed immediately following fine grading.

(12) Trees and other existing vegetation shall be retained whenever feasible; the area within the dripline shall be fenced or roped off to protect trees from construction equipment.

(13) Construction wastes will be managed to reduce the potential for stormwater runoff to mobilize these wastes and subsequently contaminate surface or ground water. The storage, disposal, or use as fill of material containing asphalt, concrete, construction debris or stumps, even if determined to be non-hazardous, is prohibited.

(~~13~~14) All areas damaged during construction shall be resodded, reseeded, or otherwise restored. Where soil compaction has occurred through storage of materials or use of equipment, soil infiltration shall be restored through use of soil amendments or other means. Monitoring and maintenance schedules, where required, shall be predetermined.

(1) The building official and/or his or her designee shall accept plans for existing uses and facilities which by their nature may cause erosion and sedimentation, such as excavation and quarrying operations; provided, that this section shall not apply to article III, section 1(a)(1). Plans or satisfactory evidence to demonstrate that the existing operations accomplish the objectives
of the section shall be submitted to the building official and/or his/her designee within one hundred twenty (120) days from the date of the determination of applicability. Implementation of the plan shall be initiated upon approval of the plan.

(2) When the preexisting use is a gravel extraction operation, the property owner shall conduct the operation in a manner so as not to devalue abutting properties; to protect abutting property from wind erosion and soil erosion due to increased runoff, sedimentation of reservoirs, and drainage systems; and to
limit the depth of extraction so as not to interfere with the existing nearby water table.

ARTICLE VI. Enforcement.

Section 1. Performance bond.

(1) Before approving an erosion sediment control plan or SWPPP, the building official or his or her designee may require the applicant/owner to file a surety company performance bond, deposit of money, negotiable securities, or other method of surety, as specified by the building official or his or her designee. When any land disturbing activity is to take place within one hundred feet (100') of any watercourse or coastal feature or within an identified flood hazard district, or on slopes in excess of ten percent (10%), the filing of a performance bond shall be required. The amount of the bond, as determined by the public works department, or in its absence, the building official or his or her designee, shall be sufficient to cover the cost of implementing all erosion and sediment control measures as shown on the plan.

(2) The bond or negotiable security filed by the applicant shall be subject to approval of the form, content, amount, and manner of execution by the public works director and the city or town solicitor.

(3) A performance bond for an erosion sediment control plan for a subdivision may be included in the performance bond of the subdivision. The posting of the bond as part of the subdivision performance bond does not, however, relieve the owner of any requirements of this ordinance.

[Connecticut's model ordinance also requires the following:

yy) Site development shall not begin unless the soil erosion and sediment control plan is approved and those control measures and facilities in the plan scheduled for installation prior to site development are installed and functional.

zz) Planned soil erosion and sediment control measures and facilities shall be installed as scheduled according to the approved plan.]

(1) Whenever the building official or his or her designee finds that a default has occurred in the performance of any terms or conditions of the bond or in the implementation of measures secured by the bond, written notice shall be made to the applicant and to the surety of the bond by the municipal solicitor. The notice shall state the nature of default, work to be done, the estimated cost, and the period of time deemed by the building official or his or her designee to be reasonably necessary for the completion of the work.

(2) Failure of the applicant to acknowledge and comply with the provisions and deadlines outlined in the notice of default means the institution, by the city or town solicitor, without further notice of proceedings whatsoever, of appropriate measures to utilize the performance bond, to cause the required work to be completed by the city or town, by contract or by other appropriate means as determined by the city or town solicitor.

If a cash or negotiable securities deposit has been posted by the applicant, notice and procedure are the same as provided for in subsection (b) of this section.

The performance bonding requirement shall remain in full force and effect for twelve (12) months following completion of the project, or longer if deemed necessary by the building official or his or her designee.

Section 2. Approval – Expiration – Renewal.

(a) Every approval granted in this ordinance shall expire at the end of the time period established in the conditions. The developer shall fully perform and complete all of the work required within the specified time period.

(b) If the developer is unable to complete the work within the designated time period, he or she shall, at least thirty (30) days prior to the expiration date, submit a written request for an extension of time to the building official or his or her designee, stating the underlying reasons for the requested time extension. If the extension is warranted, the building official or his or her designee may grant an extension of time up to a maximum of one year from the date of the original deadline. Subsequent extensions under the same conditions may be granted at the discretion of the building official.

Section 3. Maintenance of measures.

Maintenance of all erosion sediment control devices under this ordinance shall be the responsibility of the owner. The erosion sediment control devices shall be maintained in good condition and working order on a continuing basis. Watercourses originating and located completely on private property shall be the responsibility of the owner to their point of open discharge at the property line or at a communal watercourse within the property.

Section 4. Liability of applicant.

Neither approval of an erosion and sediment control plan nor compliance with any condition of this chapter shall relieve the owner/applicant from any responsibility for damage to persons or property, nor impose any liability upon the city or town for damages to persons or property.

ARTICLE VII.

Section 1. Inspections.

The provisions of this ordinance shall be administered and enforced by the building official or his or her designee. All work shall be subject to periodic inspections by the building official, or his or her designee. All work shall be performed in accordance with an inspection and construction control schedule approved by the building official or his or her designee, who shall maintain a permanent file on all of his or her inspections.
The owner or his/her agent shall make regular inspections of all control measures in accordance with the inspection schedule outlined on the approved Erosion and Sediment Control Plan. The purpose of such inspections will be to determine the overall effectiveness of the control plan and the need for additional control measures. All inspections shall be conducted by a properly trained professional recognized as a Certified Erosion, Sediment and Storm Water Inspector (CESSWI) by the Certified Professional in Erosion and Sediment Control (CPESC, Inc). All inspections shall be documented in written form and submitted to the building official as requested.

The building official or his or her designee will perform a minimum of two (2) inspections; one during construction and one after final stabilization of the site. The developer or owner shall notify the building official of the installation of erosion and sediment control measures, in order for an inspection to be performed during the construction phase of the project. The building official or his/her designee will confirm that wastes are controlled and that the erosion and sediment control measures are installed as planned, meet the needs of the site and conform with the RI Erosion & Sediment Control Handbook.

Upon completion of ~~the~~ all work, the developer or owner shall notify the building official or his or her designee that all grading, drainage, erosion and sediment control measures and devices, and vegetation and ground cover planting has been completed in conformance with the approval, all attached plans, specifications, conditions, and other applicable provisions of this ordinance.

(1) Upon notification of the completion by the owner, the building official or his or her designee shall make a final inspection of the site in question, and shall prepare a final summary inspection report of its findings which shall be retained in the department of inspections, and in the department of public works' permanent inspections file.
[Johnston specifies that for public works projects, a copy of the final summary inspection report be placed in their permanent inspections file. Woonsocket sends a copy of the inspection report to the developer/owner.]

(2) The applicant/owner may request the release of his or her performance bond from the building official or his or her designee twelve (12) months after the final site inspection has been completed and approved. In the instance where the performance bond has been posted with the recording of a final subdivision, the bond shall be released after the building official or his or her designee has been notified by the city or town planning director of successful completion of all plat improvements by the applicant/owner.

ARTICLE VIII. Notification.

Section 1. Noncompliance.

If, at any stage, the work in progress and/or completed under the terms of an approved erosion and sediment control plan does not conform to the plan, a written notice from the building official or his or her designee to comply shall be transmitted by certified mail to the owner.

The notice shall state the nature of the temporary and permanent corrections required, and the time limit within which corrections shall be completed as established in section 2(b) of this article. Failure to comply with the required corrections within the specified time limit is considered a violation of this ordinance, in which case the performance bond or cash or negotiable securities deposit is subject to notice of default, in accordance with sections 1(b) and 1(c) of article VI.

Section 2. Penalties.

The approval of an erosion and sediment control plan under this chapter may be revoked or suspended by the building official and all work on the project halted for an indefinite time period by the building official after written notification is transmitted by the building official to the developer for one or more of the following reasons:

(1) Violation of any condition of the approved plan, or specifications pertaining to it;
(2) Violation of any provision of this ordinance or any other applicable law, ordinance, rule, or regulation related to the work or site of work; and

(3) The existence of any condition or the performance of any act constituting or creating a nuisance, hazard, or endangerment to human life or the property of others, or contrary to the spirit or intent of this ordinance.
In addition, whenever there is a failure to comply with the provisions of this ordinance, the city or town has the right to notify the applicant/owner that he or she has five (5) days from the receipt of notice to temporarily correct the violations and thirty (30) days from receipt of notice to permanently correct the violations. Should the applicant owner fail to take the temporary corrective measures within the five (5) day period and the permanent corrective measures within the thirty (30) day period, the city or town then has the right to take whatever actions it deems necessary to correct the violations and to assert a lien on the subject property in an amount equal to the costs of remedial actions. The lien shall be enforced in the manner provided or
authorized by law for the enforcement of common law liens on personal property. The lien shall be recorded with the records of land evidence of the municipality, and the lien does incur legal interest from the date of recording. The imposition of any penalty shall not exempt the offender from compliance with the provisions of this ordinance, including revocation of the performance bond
or assessment of a lien on the property by the city or town.

(c) In addition to any other penalties provided in this section, a city or town is authorized and empowered to provide by local ordinance for penalties and/or fines of not more than two hundred fifty dollars ($250) for failure to submit plans on or before the date on which the plan must be submitted, as

stated in the determination of applicability. Each day that the plan is not submitted constitutes a separate offense.

ARTICLE IX.

Section 1. Definition of selected terms.

(a) Applicant: Any persons, corporation, or public or private organization proposing a development which would involve disturbance to the natural terrain as defined in this ordinance.

[Newport defines best management measures (BMPs):
Best Management Measures (BMPs) means schedules of activities, prohibitions of measures, general good house keeping measures, pollution prevention and educational measures, maintenance procedures, and other management measures to prevent or reduce the discharge of pollutants directly or indirectly to stormwater, receiving waters, or stormwater conveyance systems. BMPs also include treatment measures, operating procedures, and measures to control site runoff, spillage or leaks, sludge or water disposal, or drainage from raw materials storage.]

[The annotators suggest including solid waste disposal in the last sentence]

(b) Coastal feature: Coastal beaches and dunes, barrier beaches, coastal wetlands, coastal cliffs, bluffs, and banks, rocky shores, and manmade shorelines as defined in "The State of Rhode Island Coastal Resources Management Program" as amended June 28, 1983.

[Pawtucket defines construction wastes:
Construction wastes: Solid and/or liquid wastes generated from the construction/site development process. This includes, but not limited to discarded building materials, concrete truck washout, chemicals, litter, and sanitary wastes.]

[The annotators suggest including fill material containing asphalt, concrete, discarded building materials, concrete truck washout, chemicals, litter, and sanitary wastes]

(c) Cut: An excavation. The difference between a point on the original ground and a designated point of lower elevation on the final grade. Also, the material removed in excavation.

(d) Development project: Any construction, reconstruction, demolition, or removal of structures, roadways, parking, or other paved areas, utilities, or other similar facilities, including any action requiring a building permit by the city or town.

(xx) Disturbed area: An area in which the natural vegetative soil cover has been removed or altered and, therefore, susceptible to erosion. [Definition from 2009 Draft Stormwater Manual]

(e) Erosion: The removal of mineral and/or organic matter by the action of wind, water, and/or gravity.

(f) Excavate: Any act by which earth, sand, gravel, or any other similar material is dug into, cut, removed, displaced, relocated, or bulldozed, and includes the resulting conditions.

(g) Fill: Any act by which earth, sand, or other material is placed or moved to a new location above ground. The fill is also the difference in elevation between a point of existing undisturbed ground and a designated point of higher elevation of the final grade.

(h) Land disturbing activity: Any physical land development activity which includes such actions as clearance of vegetation, moving or filling of land, removal or excavation of soil or mineral resources, or similar activities.

(xx) Limit of disturbance: Line delineating the boundary of the area to be disturbed during a development or redevelopment project. Area outside this boundary shall not be touched. [Definition from 2009 Draft Stormwater Manual]

(i) Runoff: The surface water discharge or rate of discharge of a given watershed after a fall of rain or snow, and including seepage flows that do not enter the soil but run off the surface of the land. Also, that portion of water that is not absorbed by the soil, but runs off the land surface.

(j) Sediment: Solid material, both mineral and/or organic, that is in suspension, is being transported, or has been moved from its site or origin by wind, water, and/or gravity as a product of erosion.

xx) Soil amendment: Any material, such as compost, lime, animal manures, crop residues, etc., that is worked into the soil. Generally pertains to materials other than fertilizers.

(k) Soil erosion and sediment control plan: The approved document required before any person may cause a disturbance to the natural terrain within the city or town as regulated by this ordinance. Also, referred to as erosion and sediment control plan, approved plan.

(l) Watercourse: The term watercourse means any tidewater or coastal wetland at its mean high water level, and any freshwater wetland at its seasonal high water level, including, but not limited to, any river, stream, brook, pond, lake, swamp, marsh bog, fen, wet meadow, or any other standing or flowing body of water. The edge of the watercourse shall be used for delineation purposes.

Appendix C. Request Form to Submit Updates to the Handbook

Request Form for Adoption of New or Alternative Soil and Sediment Control Measures and Updates to the Rhode Island Soil and Sediment Control Handbook (2014 Revision)

Review Form (requests will only be accepted on this format)	
Name (required):	Date (required*):
Organization/Company (if applicable):	
E-mail (required):	Tel:

NOTE: Handbook may be downloaded at:
http://www.dem.ri.gov/soilerosion2014final.pdf
* Response to requests will be made within 90 days of receipt as to response or status of request.

Item	Document Reference			Comments/Recommendations.
	Section No.	Page No.	Para-graph No.	
1.				
2.				
3.				
4.				
5.				
6.				
7.				
8.				
9.				
10.				
11.				
12.				
13.				
14.				

All interested parties are invited to continue to submit written comments on the updates to the Handbook by utilizing the review form located in Appendix C of the Handbook. Completed review forms may submitted here:

Beverly Migliore, Supervising Environmental Scientist
Office of Customer and Technical Assistance
RI Department of Environmental Management
235 Promenade Street
Providence, RI 02908
or by e-mail to SESC.Handbook@dem.ri.gov

Appendix D. Subscription for Updates and other Notices for the Handbook

Accessing the Handbook

Access to the *Rhode Island Soil Erosion and Sediment Control Handbook* will be managed through the following RI DEM website:

http://www.dem.ri.gov/programs/benviron/water/permits/swcoord/index.htm

An electronic (.pdf) version of the Handbook can be downloaded from this site.

Hardcopies of the *Handbook* can also be purchased via the Southern Rhode Island Conservation District website:

http://sricd.org/

Stay Informed Regarding Updates, Corrections, and Related Information Automatically

Persons wishing to be on a list serve to receive electronic notices of future additions, updates, corrections or related information regarding the *Rhode Island Soil Erosion and Sediment Control Handbook* will need to subscribe to the RIDEM Office of Water Resources (OWR) email list.

The Office of Water Resources (OWR) has created an e-mail list to distribute guidance, policies and new regulations regarding a variety of stormwater topics. You can subscribe by visiting the user-friendly webpage at: http://listserve.ri.gov/mailman/listinfo/owrinfo

If you have difficulty subscribing or have other questions, email: owner-owrinfo@listserve.ri.gov

Appendix E. Model SESC Plan Templates

RI Model SESC Plan Instructions

RI Model Soil Erosion and Sediment Control Plan For Construction Sites That Will Disturb ≥ 1 Acre of Land

To download an electronic version of the RI Model SESC Plan please visit our webpage at:

Instructions for SESC Plan Preparers:

Adherence to the principals and the format outlined in this RI Model SESC Plan developed by the RI Department of Environmental Management, Office of Water Resources for sites that will disturb ≥1 acre of land will ensure that your proposed project will receive a faster regulatory review, faster project approval, and will result in improved operator compliance with environmental regulations. When converting this Model SESC Plan into your site specific SESC Plan, please keep the following in mind:

1) Items in black should remain in the final site specific SESC Plan and do not need to be modified.
2) Items highlighted in gray indicate where information must be inserted. Click on the highlighted text and type response – the gray highlighting will be over-written.
3) *Items in blue-italics are included to provide guidance to you, the SESC Plan preparer, during the development of the site specific SESC Plan. These items may be deleted in the final site specific SESC Plan document.*
4) If any section of the Model SESC Plan does not apply to your project, simply note that it is not applicable and provide reasoning.

Any questions regarding the SESC Plan, control measures, inspection requirements, or any other facet of this document may be addressed to the RIDEM, Office of Water Resources, RIPDES Permitting Program at 401-222-4700.

Soil Erosion and Sediment Control Plan

For:

Project Name

Project Site Location/Address

City, State, Zip Code

Assessor's Plat and Lot Number

Owner:	Company Name Name Address City, State, Zip Code Telephone Number Email Address
Operator: *TO BE DETERMINED UPON CONTRACT AWARD*	Company Name Name Address City, State, Zip Code Telephone Number Email Address
Estimated Project Dates:	Start Date: Start Date Completion Date: End Date
SESC Plan Prepared By:	Company Name Name Address City, State, Zip Code Telephone Number Email Address
SESC Plan Preparation Date:	Date

OWNER CERTIFICATION

I certify under penalty of law that this document and all attachments were prepared under the direction or supervision in accordance with a system designed to assure that qualified personnel properly gather and evaluate the information submitted. Based on my inquiry of the person or persons who manage the system, or those persons directly responsible for gathering the information, the information submitted is, to the best of my knowledge and belief, true, accurate, and complete.

I am aware that there are significant penalties for submitting false information, including the possibility of fine and imprisonment for knowing violations. I am aware that it is the responsibility of the site owner and operator to implement and amend the Soil Erosion and Sediment Control Plan as appropriate in accordance with the requirements of the RIPDES Construction General Permit.

_____

Owner Signature: Date

Owner Name: Name

Owner Title: Title

Company Name: Company Name (if applicable)

Address: Mailing Address

Phone Number: Phone Number

Email Address: Email

OPERATOR CERTIFICATION

Upon contract award, the OPERATOR must sign this certification statement before construction may begin.

I certify under penalty of law that this document and all attachments were prepared under the direction or supervision in accordance with a system designed to assure that qualified personnel properly gather and evaluate the information submitted. Based on my inquiry of the person or persons who manage the system, or those persons directly responsible for gathering the information, the information submitted is, to the best of my knowledge and belief, true, accurate, and complete.

I am aware that there are significant penalties for submitting false information, including the possibility of fine and imprisonment for knowing violations. I am aware that it is the responsibility of the owner/operator to implement and amend the Soil Erosion and Sediment Control Plan as appropriate in accordance with the requirements of the RIPDES Construction General Permit.

_____

Operator Signature: Date

Contractor Representative: Name

Contractor Title: Title

Contractor Company Name: Company Name (if applicable)

Address: Mailing Address

Phone Number: Phone Number

Email Address: Email

TABLE OF CONTENTS

OWNER CERTIFICATION ..... Error! Bookmark not defined.

OPERATOR CERTIFICATION ..... Error! Bookmark not defined.

TABLE OF CONTENTS ..... Error! Bookmark not defined.

INTRODUCTION **391**

ADDITIONAL RESOURCES ..... Error! Bookmark not defined.

SECTION 1: SITE DESCRIPTION **393**

1.1 Project/Site Information 393
1.2 Nature and Duration of Construction Activity 393
1.3 Receiving Waters 429
1.4 Natural Heritage Area Information 430
1.5 Historic Preservation/Cultural Resources 430
1.6 Site Features and Sensitive Areas to be Protected 430

SECTION 2: EROSION, RUNOFF, AND SEDIMENT CONTROL **430**

2.1 Minimize Disturbed Area and Protect Natural Features and Soil 396
2.2 Phase Construction Activity 396
2.3 Monitoring Weather Conditions 397
2.4 Control Stormwater Flowing Onto and Through the Project 398
2.5 Stabilize Soils 398
2.6 Protect Storm Drain Inlets 399
2.7 Protect Storm Drain Outlets 399
2.8 Establish Perimeter Controls and Sediment Barriers 400
2.9 Establish Temporary Controls for the Protection of Post-Construction Stormwater Practices 400
2.10 Temporary Sediment Trapping and Temporary Stormwater Conveyance 400
2.11 Utilize Surface Outlets 401
2.12 Properly Use Treatment Chemicals 401
2.13 Construction Site Erosion, Runoff, and Sediment Control Measure List 404

SECTION 3: CONSTRUCTION ACTIVITY POLLUTION PREVENTION **405**

3.1 Existing Data of Known Discharges from Site 405
3.2 Prohibited Discharges 405
3.3 Potential Sources of Pollution 406
3.4 Minimize Off-site Tracking of Sediments 407
3.5 Proper Waste Disposal 407
3.6 Spill Prevention and Control 408
3.7 Control of Allowable Non-Stormwater Discharges 408
3.8 Control Dewatering Practices 409
3.9 Establish Proper Building Material Staging Areas 409
3.10 Control Discharges from Stockpiled Sediment or Soil 410
3.11 Minimize Dust 410
3.12 Designate Washout Areas 411
3.13 Establish Proper Equipment/Vehicle Fueling and Maintenance Practices 411
3.14 Construction Activity Pollution Prevention Control Measure List 412

SECTION 4: CONTROL PRACTICE INSTALLATION, INSPECTION and MAINTENANCE **413**

4.1 Installation 413
4.2 Inspections 413
4.3 Maintenance 414
4.4 Corrective Actions 415

SECTION 5: SITE PLANS **416**

5.1 SESC Plan Site Maps 416

SECTION 6: AMENDMENTS 418

SECTION 7: RECORDKEEPING 419

SECTION 8: PARTY CERTIFICATIONS 420

ATTACHMENTS 421

This Table of Contents is structured to be automatically populated by Microsoft Word.
Upon final completion of this template, "right-click" anywhere in the Table of Contents, select "Update Field", and then "Update entire table". Page numbers will automatically be synced with the changed document.

INTRODUCTION

This Construction Site Soil Erosion and Sediment Control Plan (SESC Plan) has been prepared for OWNER/COMPANY NAME for the PROJECT NAME. In accordance with the RIDEM Rhode Island Pollutant Discharge Elimination System (RIPDES) General Permit for Stormwater Discharge Associated with Construction Activity (RIPDES Construction General Permit ("CGP")), projects that disturb one (1) or more acres require the preparation of a SESC Plan. This SESC Plan provides guidance for complying with the terms and conditions of the RIPDES Construction General Permit. However, this document does not negate or eliminate the need to understand and adhere to all applicable RIPDES regulations.

The purpose of erosion, runoff, and sedimentation control measures is to prevent pollutants from leaving the construction site and entering waterways or environmentally sensitive areas during and after construction. This SESC Plan has been prepared prior to the initiation of construction activities to address anticipated worksite conditions. The control measures depicted on the site plan and described in this narrative should be considered the minimum measures required to control erosion, sedimentation, and stormwater runoff at the site. Since construction is a dynamic process with changing site conditions, it is the operator's responsibility to manage the site during each construction phase so as to prevent pollutants from leaving the site. This may require the operator to revise and amend the SESC Plan during construction to address varying site and/or weather conditions, such as by adding or realigning erosion or sediment controls, to ensure the SESC Plan remains compliant with the RIPDES Construction General Permit. Records of these changes must be added to the amendment log attached to the SESC Plan, and to the site plans as "red-lined" drawings. *Please Note*: **Even if practices are correctly installed on a site according to the approved plan, the site is only in compliance when erosion, runoff, and sedimentation are effectively controlled throughout the entire site.**

It is the responsibility of the site owner and the site operator to maintain the SESC Plan at the site, including all attachments, amendments and inspection records, and to make all records available for inspection by RIDEM during and after construction. (RIPDES CGP - Part III.G)

The site owner, the site operator, and the designated site inspector are required to review the SESC Plan and sign the Party Certification pages (Section 8). The primary contractor (if different) and all subcontractors (if applicable) involved in earthwork or exterior construction activities are also required to review the SESC Plan and sign the certification pages before construction begins.

Any questions regarding the SESC Plan, control measures, inspection requirements, or any other facet of this document may be addressed to the RIDEM Office of Water Resources, RIPDES Permitting Program at 401-222-4700.

ADDITIONAL RESOURCES

Rhode Island Department of Environmental Management
Office of Water Resources
RIPDES Permitting Program
235 Promenade Street
Providence, RI 02908-5767
phone: 401-222-4700
email: waterresources@dem.ri.gov

RIDEM Office of Water Resources website
http://www.dem.state.ri.us/programs/benviron/water/index.htm

RIDEM RIPDES website
http://www.dem.state.ri.us/programs/benviron/water/permits/ripdes/index.htm

RIDEM Water Quality website (for 303(d) and TMDL listings)
http://www.dem.ri.gov/programs/benviron/water/quality/index.htm

RIDEM Rhode Island Natural Heritage Program
http://www.dem.ri.gov/programs/bpoladm/plandev/heritage/index.htm

RIDEM Geographic Data Viewer – Environmental Resource Map
http://www.dem.ri.gov/maps/index.htm

RIDEM *RI Stormwater Design and Installation Standards Manual* (RISDISM) (as amended)
http://www.dem.state.ri.us/programs/benviron/water/permits/ripdes/stwater/t4guide/desman.htm

RIDEM, USDA Soil Conservation Service, and RI State Conservation Committee *Soil Erosion and Sediment Control Handbook* (as amended)
http://www.dot.ri.gov/documents/enviro/stormwater/Soil_Erosion_Sediment_Control_Handbook.pdf

Rhode Island Department of Transportation *Standard Specifications for Road and Bridge Design and Other Specifications* and *Standard Details*
http://www.dot.ri.gov/engineering/standards/index.asp

Natural Resources Conservation Service - Rhode Island Soil Survey Program
http://www.ri.nrcs.usda.gov/technical/soils.html

EPA NPDES Stormwater Pollution Prevention Plan Guidance website
http://cfpub.epa.gov/npdes/stormwater/SWPPP.cfm#guide

EPA National Menu of Stormwater Best Management Practices
http://cfpub.epa.gov/npdes/stormwater/menuofbmps

SECTION 1: SITE DESCRIPTION

1.1 Project/Site Information

Project/Site Name:

- INSERT TEXT HERE
- INSERT GENERAL PROJECT OVERVIEW HERE

Project Street/Location:

- INSERT TEXT HERE
- INSERT GENERAL LOCATION MAP HERE

Provide construction site estimates of the total area of the site and the total area of the site that is expected to undergo soil disturbance.

The following are estimates of the construction site area:

- Total Project Area acres
- Total Project Area to be disturbed acres

1.2 Nature and Duration of Construction Activity

Provide a narrative describing the nature and estimated timetable for the construction activities, including the ultimate intended use of the project.

- INSERT TEXT HERE

Estimated Project Start Date: INSERT DATE HERE

Estimated Project Completion Date: INSERT DATE HERE

Estimated Number of Months: INSERT # HERE

1.3 Receiving Waters

RIPDES CGP - Parts IV.A.7 & IV.A.8

List the waterbody(s) that will receive stormwater from the site, including streams, rivers, lakes, coastal waters, and wetlands. Note any stream crossings, if applicable.

List/description of receiving waters:

- INSERT TEXT HERE

List the separate storm sewer system or drainage system that stormwater from the site could discharge to and the waterbody(s) that receive discharges from the storm sewer or drainage system.

List/description of separate storm sewer systems:

- INSERT TEXT HERE

If any of the waterbodies above are impaired (303(d) listed) and/or subject to Total Maximum Daily Loads (TMDLs), list the pollutants causing the impairment and any specific requirements in the TMDL(s) that are

applicable to construction sites. Visit http://www.dem.ri.gov/programs/benviron/water/quality/index.htm for more information and a list of Rhode Island impaired waters and TMDL Studies. (See also the RIDEM RIPDES Construction General Permit Notice of Intent instructions.)

List/provide description of 303(d)/TMDL waters and applicable TMDL requirements:

- INSERT TEXT HERE

1.4 Natural Heritage Area Information

RIPDES CGP - Part III.H

Each project authorized under the RIPDES Construction General Permit must determine if the site is within or directly discharges to a Natural Heritage Area (NHA). DEM Natural Heritage Areas include known occurrences of state and federal rare, threatened and endangered species. Review RIDEM NHA maps to determine if there are natural heritage areas on or near the construction site. See also the RIDEM Notice of Intent instructions.

Are there any Natural Heritage Areas being disturbed by the construction activity or will discharges be directed to the Natural Heritage Area as a result of the construction activity?

☐ Yes ☐ No

If yes, describe or refer to documentation which determines the likelihood of an impact on this area and the steps that will be taken to address any impacts.

- INSERT TEXT HERE

1.5 Historic Preservation/Cultural Resources

The National Historic Preservation Act, and any state, local and tribal historic preservation laws apply to construction activities. As with endangered species, some permits may specifically require you to assess the potential impact of your stormwater discharges on historic properties. However, whether or not this is stated as a condition for permit coverage, the National Historic Preservation Act and any applicable state or tribal laws apply to you. Contact the Rhode Island Historic Preservation Officer (http://www.preservation.ri.gov/) or your Tribal Historic Preservation Officer (http://grants.cr.nps.gov/THPO_Review/index.cfm) for more information.

Are there any historic properties, historic cemeteries or cultural resources on or near the construction site?

☐ Yes ☐ No

Describe how this determination was made and summarize state or tribal review comments:

- INSERT TEXT HERE

If yes, describe or refer to documentation which determines the likelihood of an impact on this historic property, historic cemetery or cultural resource and the steps taken to address that impact including any conditions or mitigation measures that were approved by other parties.

- INSERT TEXT HERE

1.6 Site Features and Sensitive Areas to be Protected

RISDISM - Section 4.5.1

The first goal in the LID site planning and design process is to avoid disturbance of natural features. This includes identification and preservation of natural areas that can be used in the protection of water resources. It is important to understand that minimizing the hydrologic alteration of a site is just as important as stormwater treatment for resource protection. Therefore, describe all site features and sensitive resources that exist at the site such as floodplains, steep slopes (>15%), erodible soils, wetlands, hydric soils, surface waters, and their riparian buffers, specimen trees, natural vegetation,

forest areas, stream crossings, historic properties, historic cemeteries or cultural resources that are to be preserved.

Sensitive areas and measures that must be implemented to protect them:

- INSERT TEXT or TABLE HERE

SECTION 2: EROSION, RUNOFF, AND SEDIMENT CONTROL

RIPDES Construction General Permit – Part III.J.1

The purpose of erosion controls is to prevent sediment from being detached and moved by wind or the erosive action of raindrop, sheet, rill, gully, and channel erosion. Properly installed and maintained erosion controls are the primary defense against sediment pollution.

Runoff controls are used to slow the velocity of concentrated water flows. By intercepting and diverting stormwater runoff to a stabilized outlet or treatment practice, erosion and sedimentation are reduced.

Sedimentation controls are the last line of defense against moving sediment. The purpose is to prevent sediment from leaving the construction site and entering environmentally sensitive areas.

This section describes the set of measures that will be installed before and during the construction project to control pollutants in stormwater discharges that will occur at the site. Such measures may include: perimeter controls, stock pile covering, storm drain inlet protection, check dams, and temporary seeding.

Include any applicable references to design specifications and any applicable maintenance requirements.

2.1 Minimize Disturbed Area and Protect Natural Features and Soil

RISDISM - Minimum Standard 1

As far as is practicable, existing vegetation shall be protected and left in place, in accordance with the clearing limits shown on the approved plans. Prior to any land disturbance activities commencing on the site, the Contractor shall physically mark limits of disturbance (LOD) on the site and any areas to be protected within the site, so that workers can clearly identify the areas to be protected.

Describe natural features identified earlier and how each will be protected during construction activity. Also describe how topsoil will be preserved. Describe the areas that will be disturbed with each phase of construction and the control measures (signs, fences, etc.) that will be used to protect those areas that should not be disturbed. Plans should highlight measures to prevent soil compaction in areas designated as Qualified Pervious Areas (QPAs) and infiltration practices to protect infiltration capacity.

- INSERT TEXT

2.2 Phase Construction Activity

RIPDES CGP - Part III.J.1.a

CONSTRUCTION SITE ESTIMATES

For each phase of the construction project, provide site estimates of the total area of the project phase, the total area of the project phase that is expected to undergo soil disturbance, and the calculated pre-construction and post-construction runoff coefficients for the project phase.

The following are estimates of each phase of the construction project:

Total Area	acres
Area to be disturbed	acres
Percentage impervious area before construction	%
Runoff coefficient before construction	
Percentage impervious area after construction	%
Runoff coefficient after construction	

Proper sequencing of construction activities is essential to maximize the effectiveness of erosion, runoff, and sediment control measures. Construction sequencing and timing of construction activities will include:

1. Installation of all erosion, runoff, and sediment controls and temporary pollution prevention measures that are required to be in place and functional before any earthwork begins. This shall be done in accordance with the *Rhode Island Soil Erosion and Sediment Control Handbook* (as amended) and/or the *RI Department of Transportation Standard Specifications for Road and Bridge Construction* (as amended). Upon acceptable completion of site preparation and installation of erosion, runoff, and sediment controls and temporary pollution prevention measures, site construction activities may commence.
2. Protection of planned infiltration sites and qualifying pervious areas from compaction.
3. Upon commencement of site construction activities, the operator shall initiate appropriate stabilization practices on all disturbed areas as soon as possible, but not more than fourteen (14) days after the construction activity in that area has temporarily or permanently ceased.
4. Routine inspection and maintenance and/or modification of erosion, runoff, and sediment controls and temporary pollution prevention measures while earthwork is ongoing is required.
5. Final site stabilization of any disturbed areas after earthwork has been completed and removal of temporary erosion, runoff, and sediment controls and temporary pollution prevention measures.

For each phase of the construction project, describe the intended construction sequencing and timing of major activities, including grading activities, road and utility installation, and building phases. The first stage should include all erosion, runoff, and sediment controls and temporary pollution prevention measures that are required to be in place before earthwork begins. Stages II through XX may include erosion, runoff, and sediment controls and temporary pollution prevention measures required while earthwork is ongoing. The final stage should include final stabilization control measures.

- BEFORE EARTHWORK
  - ☐ Describe controls to be installed prior to earthwork
  - ☐ List associated control measures
  - ☐ Identify protection of planned infiltration sites and qualifying pervious areas from compaction
- DURING EARTHWORK
  - ☐ Describe controls to be inspected and maintained during earthwork
  - ☐ List associated control measures
  - ☐ Describe stabilization methods for this phase (describe any temporary stabilization methods that will be used before final stabilization)
- FINAL STABILIZATION
  - ☐ Describe controls to be removed and/or installed for final stabilization
  - ☐ List associated control measures
  - ☐ Describe stabilization methods for this phase (describe any temporary stabilization methods that will be used before final stabilization)

- Add additional stages as required

2.3 Monitoring Weather Conditions

Care will be taken to avoid having unstabilized areas exposed during precipitation events. Weather forecasts will be routinely checked, and in the case of an expected precipitation event of over 0.25-inches over a 24-hour period, all control measures will be inspected, and maintained as necessary, prior to the weather event.

In the case of an extreme weather forecast (greater than one-inch of rain over a 24-hour period), additional erosion/sediment controls will be installed where appropriate.

List the weather gauge station that will be utilized to monitor weather conditions on the construction site. See www.wunderground.com or www.weather.gov for available stations.

The weather gauge station and website that will be utilized to monitor weather conditions on the construction site is as follows:

- INSERT TEXT

2.4 Control Stormwater Flowing Onto and Through the Project

RIPDES CGP - Part III.J.1.b

Drainage Patterns:

Provide a description of the drainage patterns that will be impacted by construction activities.

- Existing: INSERT TEXT HERE
- Proposed: INSERT TEXT HERE

Structural control measures are used to divert flows from exposed soils, retain or detain flows, or otherwise limit runoff and the discharge of pollutants from exposed areas of the site.

Control measures shall be installed as depicted on the approved plan set and in accordance with the *Rhode Island Soil Erosion and Sediment Control Handbook* (as amended) or the *RI Department of Transportation Standard Specifications for Road and Bridge Construction*.

Describe structural practices (i.e., diversions, berms, ditches, storage basins) including design specifications and details used to divert flows from exposed soils, retain or detain flows, or otherwise limit runoff and the discharge of pollutants from exposed areas of the site.

- INSERT TEXT

2.5 Stabilize Soils

RIPDES CGP - Part III.J.1.c

Upon completion and acceptance of site preparation and initial installation of erosion, runoff, and sediment controls and temporary pollution prevention measures, the operator shall initiate appropriate stabilization practices during all phases of construction on all disturbed areas as soon as possible, but not more than fourteen (14) days after the construction activity in that area has temporarily or permanently ceased.

Any disturbed areas that will not have active construction activity occurring within 14 days must be stabilized using the control measures depicted on the approved plan set and in accordance with applicable measures specified in the *Rhode Island Soil Erosion and Sediment Control Handbook* (as amended).

Only areas that can be reasonably expected to have active construction work being performed within 14 days of disturbance will be cleared/grubbed at any one time. It is NOT acceptable to clear and grub the entire construction site if portions will not be active within the 14-day time frame. Proper phasing of clearing and grubbing activities shall include temporary stabilization techniques for areas cleared and grubbed that will not be active within the 14-day time frame.

No undisturbed areas shall be cleared of existing vegetation after October 15th of any calendar year or during any period of full or limited winter shutdown. All disturbed soils exposed prior to October 15 of any calendar year shall be seeded or protected by that date. Any such areas that do not have adequate vegetative stabilization, as determined by the site operator or designated inspector, by November 15 of any calendar year, must be stabilized through the use of structural erosion control measures (examples included but are not limited to: erosion control matting or mulch, in accordance with specifications

contained within the *RI Soil Erosion and Sediment Control Handbook* (as amended). If work continues within any of these areas during the period from October 15 through April 15, care must be taken to ensure that only the area required for that day's work is exposed.

Clearing/Grubbing shall not take place during a rain event if erosion is likely to occur; nor shall it occur if a rain event is forecasted and appropriate erosion controls cannot be installed prior to the storm.

After clearing, and by the end of each day's grubbing operation, the site operator shall install erosion control measures that are indicated on the Plans or as directed by the Engineer. Such erosion control measures shall be installed in strict accordance with the *RI Soil Erosion and Sediment Control Handbook* (as amended).

Describe controls (i.e., temporary seeding with native vegetation, hydroseeding, mulching, application of rolled erosion control products, etc.) including design specifications and details that will be implemented to stabilize exposed soils where construction activities have temporarily or permanently ceased.

- INSERT TEXT

2.6 Protect Storm Drain Inlets

RIPDES CGP - Part III.J.1.d

Storm drain inlet protection measures prevent soil and debris from entering storm drain inlets. These measures are usually temporary and are implemented before a site is disturbed. ALL stormwater inlets &/or catch basins that are operational during construction and may receive sediment-laden stormwater flow from the construction site must be protected using control measures outlined in the *Rhode Island Soil Erosion and Sediment Control Handbook* (as amended).

Possible control measures that may be used include compost filter socks, fiber rolls, gravel bag berms, or catch basin inserts. **(Please note: Hay Bale/Silt Fence protection measures DO NOT work on paved roadways.)**

If stormwater discharges from the construction site have the potential to enter storm drain inlets that then discharge to a surface water, the site owner and operator must install inlet protection practices that remove sediment from the discharge prior to entry into the storm drain inlet, and clean, or remove and replace the protection practices as sediment accumulates, as the filter becomes clogged, and/or as performance is compromised. Accumulated sediment adjacent to the inlet protection measures should be removed by the end of the same work day in which it is found or by the end of the following work day if removal by the same work day is not feasible.

Describe controls, including design specifications and details, which will be implemented to protect all inlets receiving stormwater from the project during the entire duration of the project.

- INSERT TEXT

2.7 Protect Storm Drain Outlets

RIPDES CGP - Part III.J.1.e

Outlet protection is necessary to prevent scour or severe erosion at discharge points. Outlets often have high velocity, high volume flows, and require strong materials that will withstand the forces of stormwater. The function of these control practices are to protect the soil surface, reduce velocity, and promote infiltration. Storm drain outlet control practices also offer a last line of protection against sediment entering environmentally sensitive areas.

All stormwater outlets that may discharge sediment-laden stormwater flow from the construction site must be protected using the control practices depicted on the approved plan set and in accordance with the *Rhode Island Soil Erosion and Sediment Control Handbook* (as amended).

Describe controls, including design specifications and details, which will be implemented to protect outlets discharging stormwater from the project.

- INSERT TEXT

2.8 Establish Perimeter Controls and Sediment Barriers

RIPDES CGP - Part III.J.1.f

Perimeter controls and sediment barriers shall be installed as depicted on the approved Site Plans and in accordance with the *Rhode Island Soil Erosion and Sediment Control Handbook* (as amended).

Sediment barriers and perimeter controls must be installed along those perimeter areas of the site that will receive stormwater from earth disturbing activities.

Maintenance of perimeter controls must be completed in accordance with the maintenance requirements specified in the *Rhode Island Soil Erosion and Sediment Control Handbook* (as amended).

Describe control practices including selection criteria and details, to be used to filter, and trap sediment before it leaves the construction site.

- INSERT TEXT

2.9 Establish Temporary Controls for the Protection of Post-Construction Stormwater Practices

RIPDES CGP - Part III.J.1.g

This section details the measures that will be installed to protect permanent or long term stormwater treatment practices as they are installed so that they will function properly when they are brought online at the end of the construction phase.

Include any applicable specifications from the *Rhode Island Soil Erosion and Sediment Control Handbook* (as amended), the RIDEM *RI Stormwater Design and Installation Standards Manual* (RISDISM) (as amended), including any applicable control practice maintenance requirements.

Examples of temporary control measures that can be used to protect permanent stormwater control measures include: establishing temporary sediment barriers around infiltrating practices, ensuring proper material staging areas and equipment routing (i.e. do not allow construction equipment to compact areas where infiltrating practices will be installed), and by conducting final cleaning of structural long term practices after construction is completed.

List and describe all post-construction stormwater management measures that will be installed during the construction process to control pollutants in stormwater discharges after construction operations have been completed.

After identifying all post-construction stormwater management measures, outline how these measures will be protected during the construction phase of the project to ensure that they will function appropriately once they are brought online.

- INSERT TEXT or TABLE HERE

2.10 Temporary Sediment Trapping and Temporary Stormwater Conveyance

RIPDES CGP - Part III.J.1.h

Temporary sediment trapping, temporary sediment basins, and/or temporary stormwater conveyance practices shall be installed as necessary, and maintained as depicted on approved plans and in accordance with the *Rhode Island Soil Erosion and Sediment Control Handbook* (as amended) and if

applicable, the *RI Department of Transportation Standard Specifications for Road and Bridge Construction* (as amended).

Sediment traps, basins, and barriers are used to retain sediment on the site to protect streams, lakes, drainage systems, and adjacent property. These devices are used at the outlets of channels, diversions, and other runoff conveyance measures to allow sediment-filled water to pool and sediment to settle. These measures are often used as the last line of defense to stop sediment from leaving the site.

Describe the need for temporary sediment control practices (i.e., sediment trap or sediment basin) and/or temporary stormwater conveyance practices, and if required, include design specifications and details (volume, dimensions, outlet structure) that will be implemented at the construction site to retain sediments on-site, and which demonstrate that they comply with Minimum Standard 10 of the RISDISM.

- INSERT TEXT

2.11 Utilize Surface Outlets

RIPDES CGP - Part III.J.1.i

Describe the need for surface outlets for any temporary sediment basins that will be utilized at the site. Identify whether or not these devices will be infeasible to use during periods of extended cold weather, where alternate outlets are required during frozen periods. If periods of extended cold weather are anticipated to be an issue, provide the operator with instructions for discharging from the basin using an alternate method during this period of time. In addition, instruct the operator to document the justification for not using a surface outlet device during frozen periods in the inspection reports associated with these instances.

- INSERT TEXT

2.12 Properly Use Treatment Chemicals

RIPDES CGP - Part III.J.1.j

Chemical stabilizers, polymers, and flocculants are readily available on the market and can be easily applied to construction sites for the purposes of enhancing the control of erosion, runoff, and sedimentation. The following guidelines should be adhered to for construction sites that plan to use treatment chemicals as part of their overall erosion, runoff, and sedimentation control strategy.

The U.S. Environmental Protection Agency has conducted research into the relative toxicity of chemicals commonly used for the treatment of construction stormwater discharges. The research conducted by the EPA focused on different formulations of chitosan, a cationic compound, and both cationic and anionic polyacrylamide (PAM). In summary, the studies found significant toxicity resulting from the use of chitosan and cationic PAM in laboratory conditions, and significantly less toxicity associated with using anionic PAM. EPA's research has lead to the conclusion that the use of treatment chemicals for erosion, runoff, and sedimentation control requires proper operator training and appropriate usage to avoid risk to aquatic species. In the case of cationic treatment chemicals additional safeguards may be necessary.

Application/Installation Minimum Requirements

If a site operator plans to use polymers, flocculants, or other treatment chemicals during construction the SESC plan must address the following:

1. <u>Treatment chemicals shall not be applied directly to or within 100 feet of any surface water body.</u>

2. <u>Use conventional erosion, runoff, and sedimentation controls prior to and after the application of treatment chemicals.</u> Use conventional erosion, runoff, and sedimentation controls prior to chemical addition to ensure effective treatment. Chemicals may only be applied where treated stormwater is directed to a sediment control (e.g. temporary sediment basin, perimeter control) prior to discharge.

3. Sites shall be stabilized as soon as possible using conventional measures to minimize the need to use chemical treatment.

4. Select appropriate treatment chemicals. Chemicals must be selected that are appropriately suited to the types of soils likely to be exposed during construction and to the expected turbidity, pH, and flow rate of stormwater flowing into the chemical treatment system or treatment area. **Soil testing is essential. Using the wrong form of chemical treatment will result in some form of performance failure.**

5. Minimize discharge risk from stored chemicals. Store all treatment chemicals in leak-proof containers that are kept under storm-resistant cover and surrounded by secondary containment structures (e.g., spill berms, decks, spill containment pallets), or provide equivalent measures, designed and maintained to minimize the potential discharge of treatment chemicals in stormwater or by any other means (e.g., storing chemicals in covered areas or having a spill kit available on site).

6. Use chemicals in accordance with good engineering practices and specifications of the chemical provider/supplier. You must also use treatment chemicals and chemical treatment systems in accordance with good engineering practices, and with dosing specifications and sediment removal design specifications provided by the supplier of the applicable chemicals, or document specific departures from these practices or specifications and how they reflect good engineering practice.

Treatment Chemical Application Plan

INSERT TEXT as described below:

1. List Manufacturer's name and product name for each treatment chemical proposed for use at the site.
2. Attach a copy of applicable Material Safety Data Sheets (MSDSs) or Safety Data Sheets (SDS) for each proposed treatment chemical.
3. Provide the results of third party toxicity testing of the materials proposed for use at the site.
4. Provide a certification from the site owner and operator that all proposed treatment chemicals are the same as those used in the toxicity tests and will not be altered in any way.
5. Provide an explanation as to why conventional erosion, runoff, and sediment control measures, alone or in combination, will not be sufficient to prevent turbidity impacts and sedimentation in downstream receptors.
6. Provide a plan prepared in consultation with the chemical treatment manufacturer(s) or authorized manufacturer's representative which includes the following:
    a. Identification of the areas of the site where treatment chemicals will be applied and the name, location, and distance to all downstream receptors that have the potential to be impacted from the discharges from the treatment areas.
    b. List the expected start and end dates or specific phases of the project during which each treatment chemical will be applied.
    c. Provide test results for representative soils from the site, and any recommendations from the manufacturer based on the soil tests, indicating the type of treatment chemical and the recommended application rate.
    d. List the frequency, method, and rates of application which are designed to ensure that treatment chemical concentrations will not exceed 50% of the IC25 or NOEC toxicity values, whichever is less, for each treatment chemical proposed.
    e. Provide the frequency of inspection and maintenance of the treatment chemical application system.
    f. List the method proposed for the collection, removal, and disposal or stabilization of settled particles to prevent resuspension.
    g. Describe the training that will be provided to all persons who will handle and use treatment chemicals at the construction site. Training must include appropriate, product-specific training and proper dosing requirements for each product.

Treatment Chemical SESC Plan Weekly Inspection Report Documentation Requirements

1. Document the type and quantity of treatment chemicals applied.
2. List the date, duration of discharge, and estimated discharge rate.
3. Provide an estimate of the volume of water treated.
4. Provide an estimate of the concentration of treatment chemicals in the discharge, with supporting calculations.

2.13 Construction Site Erosion, Runoff, and Sediment Control Measure List

Complete the following table for each location where Erosion, Runoff, and Sediment Control Measures will be utilized. This table is to be used as part of the SESC Plan Inspection Report – please fill out accordingly.

It is expected that this table will be amended as needed throughout the construction project.

Location/Station	Control Measure Description/Reference	Maintenance Requirement	Phase
Example: Perimeter	**Straw/Hay Bales. Chapter Five, Section F, *RI Soil Erosion and Sediment Control Handbook*.**	**Page 5-12** Inspection should be made after each storm event and repair or replacement should be made promptly as needed. **Page 5-12** Cleanout of accumulated sediment behind the bales is necessary if ½ of the original height of the bales becomes filled in with sediment.	Phase I, II, III, IV
Example: Grassed Waterways	**Erosion Control Mats. Chapter Five, Section A – Temporary Mulching (MU), *RI Soil Erosion and Sediment Control Handbook*.**	**Page 5-4** All mulches must be inspected periodically, in particular after rainstorms, to check for rill erosion. Matting should be inspected after rainstorms for dislocation or failure. If washouts or breakage occur, reinstall mat as necessary after repairing damage to the slope. Inspections should take place until grasses are firmly established. Grasses are considered established when a uniform height and density is achieved and when it is mature enough to control soil erosion and to survive severe weather conditions.	Phase I, II, III
INSERT TEXT			

SECTION 3: CONSTRUCTION ACTIVITY POLLUTION PREVENTION

RIPDES Construction General Permit – Part III.J.2

The purpose of construction activity pollution prevention is to prevent day to day construction activities from causing pollution.

This section describes the key pollution prevention measures that must be implemented to avoid and reduce the discharge of pollutants in stormwater. Example control measures include the proper management of waste, material handling and storage, and equipment/vehicle fueling/washing/maintenance operations.

Where applicable, include *RI Soil Erosion and Sediment Control Handbook* (as amended) or the *RI Department of Transportation Standard Specifications for Road and Bridge Construction* (as amended) specifications.

3.1 Existing Data of Known Discharges from Site

RIPDES CGP - Part III.I

List and provide existing data (if available) on the quality of any known discharges from the site.

Are there known discharges from the project area?

☐ Yes ☐ No

Describe how this determination was made:

- INSERT TEXT HERE

If yes, list discharges and locations:

- INSERT TEXT HERE

Is there existing data on the quality of the known discharges?

☐ Yes ☐ No

If yes, provide data:

- INSERT TEXT HERE

3.2 Prohibited Discharges

RIPDES CGP - Part III.J.2.a

The following discharges are prohibited at the construction site:

- Contaminated groundwater, unless specifically authorized by the DEM. These types of discharges may only be authorized under a separate DEM RIPDES permit.
- Wastewater from washout of concrete, unless the discharge is contained and managed by appropriate controls.
- Wastewater from washout and cleanout of stucco, paint, form release oils, curing compounds, and other construction materials.
- Fuels, oils, or other pollutants used in vehicle and equipment operation and maintenance. Proper storage and spill prevention practices must be utilized at all construction sites.
- Soaps or solvents used in vehicle and equipment washing.
- Toxic or hazardous substances from a spill or other release.

Should any of the above prohibited discharges be generated at the site, address how they will be handled. All types of waste generated at the site shall be disposed of in a manner consistent with State Law and/or regulations.

- INSERT TEXT

3.3 Potential Sources of Pollution

RIPDES CGP - Parts III.J.2 & III.J.4.h

Provide a description of potential sources of pollution that may reasonably be expected to affect the quality of stormwater discharges from the site (i.e. exposed, unstabilized soil stockpiles, clearing and grubbing operations, vehicle tracking, concrete washouts, diesel fuel, etc.)

Check All Those That Apply	Operation/ Location	Stormwater Pollutants
☐	Clearing, grading, excavating, and unstabilized areas	Sediment; Trash/Debris
☐	Construction Entrance	Sediment
☐	Soil Stockpiles	Sediment
☐	Paving operations	Sediment; Trash/Debris
☐	Concrete washout and waste	Heavy metals; pH; Trash/Debris
☐	Structure construction/ painting/ cleaning	Nutrients; pH; Trash/Debris; Toxic chemicals
☐	Demolition and debris disposal	Sediment; Trash/Debris
☐	Dewatering operations	Sediment; Nutrients
☐	Drilling and blasting operations	Sediment; pH; Trash/Debris
☐	Material delivery and storage	Sediment; Nutrients; Heavy metals; pH; Pesticides/Herbicides; Oil/Grease; Trash/Debris; Toxic chemicals
☐	Material use during building process	Nutrients; heavy metals; pH; pesticides/herbicides; oil/grease; trash/debris; toxic chemicals
☐	Solid waste/ trash/ debris	trash/debris; toxic chemicals
☐	Hazardous waste	heavy metals; pH; pesticides/herbicides; oil/grease; toxic chemicals
☐	Contaminated spills	Nutrients; heavy metals; pH; pesticides/herbicides; oil/grease; toxic chemicals
☐	Sanitary/septic waste	Nutrients; pH; Bacteria/Viruses; toxic chemicals
☐	Vehicle/equipment fueling and maintenance	Oil/Grease; Toxic chemicals
☐	Vehicle/equipment use and storage	Oil/Grease; Toxic chemicals
☐	Landscaping operations	Sediment; Nutrients; Trash/Debris

☐	Other:	
☐	Other:	

3.4 Minimize Off-site Tracking of Sediments

RIPDES CGP - Part III.J.2.b

Any construction site access point must employ the control measures on the approved SESC site plans and in accordance with the *Rhode Island Soil Erosion and Sediment Control Handbook* (as amended). Construction entrances shall be used in conjunction with the stabilization of construction roads to reduce the amount of mud picked up by construction vehicles. All construction access roads shall be constructed prior to any roadway accepting construction traffic.

The site owner and operator must:

1. Restrict vehicle use to properly designated exit points.
2. Use properly designed and constructed construction entrances at all points that exit onto paved roads so that sediment removal occurs prior to vehicle exit.
3. When and where necessary, use additional controls to remove sediment from vehicle tires prior to exit (i.e. wheel washing racks, rumble strips, and rattle plates).
4. Where sediment has been tracked out from the construction site onto the surface of off-site streets, other paved areas, and sidewalks, the deposited sediment must be removed by the end of the same work day in which the trackout occurs. Track-out must be removed by sweeping, shoveling, or vacuuming these surfaces, or by using other similarly effective means of sediment removal.

Describe location(s) of vehicle entrance(s) and exit(s), and stabilization practices used to prevent sediment from being tracked off-site. Sediment track-out must be minimized onto off-site streets, other paved areas, and sidewalks from vehicles exiting the construction site.

- INSERT TEXT

3.5 Proper Waste Disposal

RIPDES CGP - Part III.J.2.c

Building materials and other construction site wastes must be properly managed and disposed of to prevent the discharge of solid materials from wind and precipitation. All types of waste generated at the site shall be disposed of in a manner consistent with State Law and/or regulations.

- A waste collection area shall be designated on the site that does not receive a substantial amount of runoff from upland areas and does not drain directly to a waterbody or storm drain.
- All waste containers shall be covered to avoid contact with wind and precipitation.
- Waste collection shall be scheduled frequently enough to prevent containers from overfilling.
- All construction site wastes shall be collected, removed, and disposed of in accordance with applicable regulatory requirements and only at authorized disposal sites.
- Equipment and containers shall be checked for leaks, corrosion, support or foundation failure, or other signs of deterioration. Those that are found to be defective shall be immediately repaired or replaced.

Identify potential building materials and other construction wastes and document how these wastes will be properly managed and disposed of at the construction site (i.e., trash disposal, sanitary wastes, recycling, and proper material handling). All types of waste generated at the site shall be disposed of in a manner consistent with State Law and/or regulations.

- INSERT TEXT

3.6 Spill Prevention and Control

RIPDES CGP - Part III.J.2.d

All chemicals and/or hazardous waste material must be stored properly and legally in covered areas, with containment systems constructed in or around the storage areas. Areas must be designated for materials delivery and storage. All areas where potential spills can occur and their accompanying drainage points must be described. The owner and operator must establish spill prevention and control measures to reduce the chance of spills, stop the source of spills, contain and clean-up spills, and dispose of materials contaminated by spills. The operator must establish and make highly visible location(s) for the storage of spill prevention and control equipment and provide training for personnel responsible for spill prevention and control on the construction site.

Describe all areas where potential spills can occur, and their accompanying drainage points, and describe the spill prevention and control plan to reduce the chance of spills, stop the source of spills, contain and clean up spills, dispose of materials contaminated by spills, and train personnel responsible for spill prevention and control.

- INSERT TEXT

3.7 Control of Allowable Non-Stormwater Discharges

RIPDES CGP - Parts I.B.2 & III.J.2.e

Discharges not comprised of Stormwater are allowed under the RIPDES Construction General Permit but are limited to the following: discharges which result from the washdown of vehicles where no detergents are used; external building washdown where no detergents are used; the use of water to control dust; fire fighting activities; fire hydrant flushing; natural springs; uncontaminated groundwater; lawn watering; potable water sources including waterline flushing; irrigation drainage; pavement washwaters where spills or leaks of toxic or hazardous materials have not occurred (unless all spilled materials have been removed) and where detergents are not used; and foundation or footing drains where flows are not contaminated with process materials such as solvents, or contaminated by contact with soils where spills or leaks of toxic or hazardous materials has occurred. If any of these discharges may reasonably be expected to be present and to be mixed with stormwater discharges, they must be specifically listed here.

Are there allowable non-Stormwater discharges on or near the project area?

☐ Yes ☐ No

If yes, list the sources of allowable non-Stormwater discharge(s) associated with construction activity. For each of the allowable non-stormwater discharge(s) identified, describe the controls and measures that will be implemented at those sites to minimize pollutant contamination of these discharges.

List of allowable non-stormwater discharge(s) and the associated control measure(s):

- INSERT TEXT HERE

If any existing or proposed discharges consist of contaminated groundwater, such discharges are not authorized under the RIPDES Construction General Permit. These discharges must be permitted separately by seeking coverage to treat and discharge under a separate RIPDES individual permit or under the RIPDES Remediation General Permit. Contact the RIDEM Office of Water Resources RIPDES Permitting Program at 401-222-4700 for application requirements and additional information.

Are there any known or contaminated discharges, including dewatering operations, on or near the project area?
☐ Yes ☐ No

If yes, list the discharges and the RIPDES individual permit number(s) or RIPDES Remediation General Permit Authorization number(s) associated with these discharges.

- RIPDES Individual Permit number : INSERT TEXT HERE
- RIPDES Remediation General Permit Authorization number: INSERT TEXT HERE

3.8 Control Dewatering Practices

RIPDES CGP - Part III.J.2.f

Site owners and operators are prohibited from discharging groundwater or accumulated stormwater that is removed from excavations, trenches, foundations, vaults, or other similar points of accumulation, unless such waters are first effectively managed by appropriate control measures.

Examples of appropriate control measures include, but are not limited to, temporary sediment basins or sediment traps, sediment socks, dewatering tanks and bags, or filtration systems (e.g. bag or sand filters) that are designed to remove sediment. Uncontaminated, non-turbid dewatering water can be discharged without being routed to a control.

At a minimum the following discharge requirements must be met for dewatering activities:

1. Do not discharge visible floating solids or foam.
2. To the extent feasible, utilize vegetated, upland areas of the site to infiltrate dewatering water before discharge. In no case will surface waters be considered part of the treatment area.
3. At all points where dewatering water is discharged, utilize velocity dissipation devices.
4. With filter backwash water, either haul it away for disposal or return it to the beginning of the treatment process.
5. Replace and clean the filter media used in dewatering devices when the pressure differential equals or exceeds the manufacturer's specifications.
6. Dewatering practices must involve the implementation of appropriate control measures as applicable (i.e. containment areas for dewatering earth materials, portable sediment tanks and bags, pumping settling basins, and pump intake protection.)

Describe dewatering practices that will be implemented if water must be removed from an area so that construction activity can continue.

- INSERT TEXT

3.9 Establish Proper Building Material Staging Areas

RIPDES CGP - Part III.J.2.g

All chemicals and/or hazardous waste material must be stored properly and legally in covered areas, with containment systems constructed in or around the storage areas. Areas must be designated for materials delivery and storage. Designated areas shall be approved by the site owner/engineer.

Describe construction materials expected to be stored on-site and procedures for storage of materials to minimize exposure of the materials to stormwater. Minimization of exposure is not required in cases where the exposure to precipitation and to stormwater will not result in a discharge of pollutants, or where

exposure of a specific material or product poses little risk of stormwater contamination (such as final products and materials intended for outdoor use).

- INSERT TEXT

3.10 Control Discharges from Stockpiled Sediment or Soil

RIPDES CGP - Part III.J.2.h

Stock pile management consists of procedures and practices designed to minimize or eliminate the discharge of stockpiled material (soil, topsoil, base material, rubble) from entering drainage systems or surface waters.

Stockpile management consists of procedures and practices designed to minimize or eliminate the discharge of stockpiled material (soil, topsoil, base material, rubble) from entering drainage systems or surface waters. For any stockpiles or land clearing debris composed, in whole or in part, of sediment or soil, you must comply with the following requirements:

1. Locate piles within the designated limits of disturbance.
2. Protect from contact with stormwater (including run-on) using a temporary perimeter sediment barrier.
3. Where practicable, provide cover or appropriate temporary vegetative or structural stabilization to avoid direct contact with precipitation or to minimize the discharge of sediments.
4. NEVER hose down or sweep soil or sediment accumulated on pavement or other impervious surfaces into any stormwater conveyance, storm drain inlet, or surface water.
5. To the maximum extent practicable, contain and securely protect from wind.

Describe materials expected to be stockpiled or stored on-site and procedures for storage of materials to minimize exposure of the materials to stormwater and to eliminate the discharge of stockpiled material from entering drainage systems or surface waters.

- INSERT TEXT

3.11 Minimize Dust

RIPDES CGP - Part III.J.2.i

Dust control procedures and practices shall be used to suppress dust on a construction site during the construction process, as applicable. Precipitation, temperature, humidity, wind velocity and direction will determine amount and frequency of applications. However, the best method of controlling dust is to prevent dust production. This can best be accomplished by limiting the amount of bare soil exposed at one time. Dust Control measures outlined in the *Rhode Island Soil Erosion and Sediment Control Handbook* (as amended) shall be followed.

Other Dust Control methods include surface roughening, wind barriers, walls, and covers.

Describe dust control practices that will be used to suppress dust and limit its generation (i.e. applying water, limiting the amount of bare soil exposed at one time etc.).

- INSERT TEXT

3.12 Designate Washout Areas

RIPDES CGP - Part III.J.2.j

At no time shall any material (concrete, paint, chemicals) be washed into storm drains, open ditches, streets, streams, wetlands, or any environmentally sensitive area. The site operator must ensure that construction waste is properly disposed of, to avoid exposure to precipitation, at the end of each working day.

Describe location(s) and control measures that will be used to minimize the discharge of pollutants from equipment and vehicle washing, wheel wash water, washout areas for concrete mixers, paint, stucco, etc. The recommended location(s) of washout areas should be identified, or at a minimum the locations where these washout areas should not be sited should be called out.

- INSERT TEXT

3.13 Establish Proper Equipment/Vehicle Fueling and Maintenance Practices

RIPDES CGP - Part III.J.2.k

Vehicle fueling shall not take place within regulated wetlands or buffer zone areas, or within 50-feet of the storm drain system. Designated areas shall be depicted on the Approved Plans, or shall be approved by the site owner.

Vehicle maintenance and washing shall occur off-site, or in designated areas depicted on the Approved Plans or approved of by the site owner. Maintenance or washing areas shall not be within regulated wetlands or buffer zone areas, or within 50-feet of the storm drain system. Maintenance areas shall be clearly designated, and barriers shall be used around the perimeter of the maintenance area to prevent stormwater contamination.

Construction vehicles shall be inspected frequently for leaks. Repairs shall take place immediately. Disposal of all used oil, antifreeze, solvents and other automotive-related chemicals shall be according to applicable regulations; at no time shall any material be washed down the storm drain or in to any environmentally sensitive area.

Describe equipment/vehicle fueling and maintenance practices that will be implemented to prevent pollutants from mixing with stormwater (e.g., secondary containment, drip pans, spill kits, etc.) Provide recommended location(s) of fueling/maintenance areas, or, at a minimum, locations where fueling/maintenance should be avoided.

- INSERT TEXT

3.14 Construction Activity Pollution Prevention Control Measure List

Complete the following table for each location where pollution prevention control measures will be utilized. This table is to be used for the preparation of SESC Plan Inspection Reports – please fill out accordingly.

It is expected that this table will be amended as needed throughout the construction project.

Location/Station	Control Measure Description/Reference	Maintenance Requirement	Phase
Example: Construction Site Entrance/Exit	**Stone Stabilization Pad. Chapter Five, Section D – Construction Entrances, *RI Soil Erosion and Sediment Control Handbook*.**	**Page 5-9** The entrance shall be maintained in a condition which will prevent tracking or flowing of sediment onto public right-of-ways. This will require periodic top dressing with additional stone or additional length as conditions demand and repair and/or cleanout of any measures used to trap sediment. All sediment spilled, dropped, washed or tracked onto public right-of-ways must be removed immediately.	Phase I, II, III, IV
Example: Adjacent Roads	Public roads adjacent to a construction site shall be clean at the end of each day	Street Sweep if construction site sediment is visible	Phase I, II, III, IV
Example: Site Wide	Pick up of construction trash and debris	All loose trash and debris must be disposed of properly at the end of each working day	Phase I, II, III, IV
INSERT TEXT			

SECTION 4: CONTROL PRACTICE INSTALLATION, INSPECTION and MAINTENANCE

RIPDES Construction General Permit – Part III.J.3

4.1 Installation

RIPDES CGP - Part III.J.3.a

All temporary erosion, runoff, and sediment control practices should be completely installed and functioning prior to any earth disturbing activities. All stormwater controls must be installed in accordance with good engineering practices, including applicable design specifications, which may be found in manufacturer specifications and/or the *RI Soil Erosion and Sediment Control Handbook* (as amended). Any departures from such specifications must be provided, justified, and demonstrated to reflect good engineering practices.

Describe any departures from specifications and justify/demonstrate that they reflect good engineering practices.

- INSERT TEXT

4.2 Inspections

RIPDES CGP - Part III.J.3.b

Minimum Frequency - Each of the following areas must be inspected by or under the supervision of the owner and operator at least once every seven (7) calendar days and within twenty-four (24) hours after any storm event, which generates at least 0.25 inches of rainfall per twenty-four (24) hour period and/or after a significant amount of runoff or snowmelt:

a. All areas that have been cleared, graded, or excavated and that have not yet completed stabilization;
b. All stormwater erosion, runoff, and sediment control measures (including pollution prevention practices) installed at the site to comply with this permit;
c. Construction material, unstabilized soil stockpiles, waste, borrow, or equipment storage, and maintenance areas that are covered by this permit and are exposed to precipitation;
d. All areas where stormwater typically flows within the site, including temporary drainage ways designed to divert, convey, and/or treat stormwater;
e. All points of discharge from the site;
f. All locations where temporary or permanent soil stabilization measures have been implemented;
g. All locations where vehicles enter or exit the site.

Qualified Personnel – The site owner and operator are responsible for designating personnel to conduct inspections and for ensuring that the personnel who are responsible for conducting the inspections are "qualified" to do so. A "qualified person" is a person knowledgeable in the principles and practices of erosion, runoff, sediment, and pollution prevention controls, who possesses the skills to assess conditions at the construction site that could impact stormwater quality, and the skills to assess the effectiveness of any stormwater controls selected and installed to meet the requirements of the permit.

Recordkeeping Requirements - All records of inspections, including records of maintenance and corrective actions must be maintained with the SESC Plan. Inspection records must include the date and time of the inspection, and the inspector's name, signature, and contact information.

Reductions in Inspection Frequency - If earth disturbing activities are suspended due to frozen conditions, inspections may be reduced to a frequency of once per month. The owner and operator must document the beginning and ending dates of these periods in the SESC Plan.

General Notes

- A separate inspection report will be prepared for each inspection.
- The Inspection Reference Number shall be a combination of the RIPDES Construction General Permit No - consecutively numbered inspections.
  ex/ Inspection reference number for the **4**th inspection of a project would be:
  RIR10####-**4**
- Each report will be signed and dated by the Inspector and must be kept onsite as required by Part III.G of the RIPDES Construction General Permit.
- Each report will be signed and dated by the Site Operator and returned to the Inspector within 24 hours of receipt.
- It is the responsibility of the site operator to maintain a copy of the SESC Plan, copies of all completed inspection reports, and amendments as part of the SESC Plan documentation at the site during construction.

Failure to make and provide documentation of inspections under this part constitutes a violation of this permit and enforcement actions under 46-12 of R.I. General Laws may result.

Describe any additional inspection requirements.

- INSERT TEXT

4.3 Maintenance

RIPDES CGP - Parts III.J.3.c & V.N

Maintenance procedures for erosion and sedimentation controls and stormwater management structures/facilities are described on the plans and in the *Rhode Island Soil Erosion and Sediment Control Handbook* (as amended).

Construction shall not commence or continue until all specified erosion and pollution controls are in place and properly installed.

Site owners and operators must ensure that all erosion, runoff, sediment, and pollution prevention controls remain in effective operating condition and are protected from activities that would reduce their effectiveness. Erosion and pollution controls must be able to prevent, under normal weather conditions, both the movement of soil materials and the intrusion of sediment-laden discharges into environmentally sensitive areas.

Erosion and pollution controls will be cleaned and maintained when directed by the site operator; after a rainstorm; and/or whenever maintenance is required for any control measure as specified in the *Rhode Island Soil Erosion and Sediment Control Handbook* (as amended) or the *RI Department of Transportation Standard Specifications for Road and Bridge Construction* (as amended).

Erosion, runoff, sediment, and pollution prevention control measures shall remain in place until all disturbed earth has been securely stabilized and accepted by the site owner. Before final removal, all accumulated sediment on the upstream side shall be removed and legally disposed of. After removal of structures, disturbed areas shall be regraded and stabilized as necessary.

Note: It is recommended that the site operator designates a full-time, on-site contact person responsible for working with the site owner to resolve SESC Plan-related issues.

Describe any specific maintenance requirements.

- INSERT TEXT

4.4 Corrective Actions

RIPDES CGP - Part III.J.3.c.iii

If, in the opinion of the designated site inspector, corrective action is required, the inspector shall note it on the inspection report and shall inform the site operator that corrective action is necessary. The site operator must make all necessary repairs whenever maintenance of any of the control measures instituted at the site is required.

In accordance with the RIPDES Construction General Permit, the site operator shall initiate work to fix the problem immediately after its discovery, and complete such work by the close of the next work day, if the problem does not require significant repair or replacement, or if the problem can be corrected through routine maintenance.

When installation of a new control or a significant repair is needed, site owners and operators must ensure that the new or modified control measure is installed and made operational by no later than seven (7) calendar days from the time of discovery where feasible. If it is infeasible to complete the installation or repair within seven (7) calendar days, the reasons why it is infeasible must be documented in the SESC Plan along with the schedule for installing the control measures and making it operational as soon as practicable after the 7-day timeframe. Such documentation of these maintenance procedures and timeframes should be described in the inspection report in which the issue was first documented. If these actions result in changes to any of the control measures outlined in the SESC Plan, site owners and operators must also modify the SESC Plan accordingly within seven (7) calendar days of completing this work.

The corrective action log contained in each inspection report must be completed, signed, and dated by the site operator once all necessary repairs have been completed.

SECTION 5: SITE PLANS

RIPDES Construction General Permit – Part III.J.4

5.1 SESC Plan Site Maps

A series of construction phase site maps must be included as part of the SESC Plan. Attachment A of this SESC Plan must contain a General Location Map. Attachment B of this SESC Plan should ideally contain several maps, the first of which should depict the undeveloped site and its current features. An additional Construction Site Map should be developed, which identifies the erosion and sedimentation control measures and construction phase pollution prevention control measures that will be implemented at the site and maintained throughout the active construction phase of the project. In some cases, more than one Construction Site Map may be necessary depending on the length and complexity of the project. It is also recommended that a working draft copy of the Construction Site Map be made available as part of the SESC Plan so that the operator may document any changes to the control measures and keep a record of any changes with the SESC Plan as required by the RIPDES Construction General Permit.

At a minimum, the SESC Plan Site Maps must include all of the following elements:

The attached SESC Plan Site Maps contain the following elements:

- ☐ Title and date of plan set(s)
- ☐ Map scale should have no less detail than 1" = 100'
- ☐ A minimum contour interval of 2' must be utilized.
- ☐ Total project area/area of development and area of soil disturbance
- ☐ Proposed limits of disturbance
- ☐ Construction site property lines
- ☐ Pre- and post-development drainage patterns
- ☐ Location and name of the receiving waters and/or separate storm sewer system and the ultimate receiving waters, including wetlands, that may be impacted during construction
- ☐ Locations where stormwater discharges to a surface water or wetland
- ☐ Location of environmentally sensitive features/areas that will be preserved and/or protected (e.g. endangered species habitats, historic sites, natural heritage areas, Qualified Pervious Areas (QPAs), etc.)
- ☐ Location and field verified boundaries of resource protection areas such as freshwater and coastal wetlands, lakes, ponds, coastal shoreline features and required setbacks (e.g. buffers, water supply wells, septic systems)
- ☐ Boundaries of existing predominant vegetation
- ☐ Location of all existing and proposed impervious surfaces/structures
- ☐ Direction(s) of stormwater flow
- ☐ Approximate slopes anticipated after the completion of major grading activities
- ☐ Location of existing and proposed conveyance systems such as grass channels and swales
- ☐ Locations of potential sources of pollution that may reasonably be expected to affect the quality of stormwater discharges from the site (i.e. exposed, unstabilized soil stockpiles and construction material and waste collection areas)
- ☐ Locations of all non-structural control measures, which will address all potential sources of pollution that may reasonably be expected to affect the quality of stormwater discharges from

the site (i.e. fueling areas, material storage areas, equipment storage areas, designated concrete washout areas, solid and hazardous waste collection areas, soil stockpiles, etc.)

- ☐ Locations and timing of stabilization practices including passed clearing and grubbing based on scheduled activities
- ☐ Locations of construction staging and material stockpiling areas
- ☐ The location of all erosion, runoff, sediment, and pollution prevention control measures, including the location of temporary or permanent sediment basins, diversions, or other water quality, peak discharge, and volume control structures
- ☐ Areas within the project limits, which are unsuitable for material storage, equipment storage, designated concrete washout collection, dumpsters, stockpiles, fueling locations, etc. (i.e. locations where these activities shall not occur, and recommendations of where they may occur)
- ☐ Locations of storm drain inlets and outfalls that need to be protected
- ☐ Locations of all graveled access entrance and exit drives and parking areas to reduce the tracking of sediment onto public and private roads
- ☐ The location of spill prevention and response equipment
- ☐ The location of all proposed post-construction best management practices, including locations of infiltrating practices and prohibited traffic areas

SECTION 6: AMENDMENTS

RIPDES Construction General Permit – Part III.F

This SESC Plan is intended to be a working document. It is expected that amendments will be required throughout the active construction phase of the project. **Even if practices are installed on a site according to the approved plan, the site is only in compliance when erosion, runoff, and sedimentation are effectively controlled throughout the entire site for the entire duration of the project.**

The SESC Plan shall be amended within seven (7) days whenever there is a change in design, construction, operation, maintenance or other procedure which has a significant effect on the potential for the discharge of pollutants, or if the SESC Plan proves to be ineffective in achieving its objectives (i.e. the selected control measures are not effective in controlling erosion or sedimentation).

In addition, the SESC Plan shall be amended to identify any new operator that will implement a component of the SESC Plan.

All revisions must be recorded in the Record of Amendments Log Sheet, which is contained in Attachment G of this SESC Plan, and dated red-lined drawings and/or a detailed written description must be appended to the SESC Plan. Inspection Forms must be revised to reflect all amendments. Update the Revision Date and the Version # in the footer of the Report to reflect amendments made.

All SESC Plan Amendments, except minor non-technical revisions, must be approved by the site owner and operator. Any amendments to control measures that involve the practice of engineering must be reviewed, signed, and stamped by a Professional Engineer registered in the State of RI.

The amended SESC plan must be kept on file at the site while construction is ongoing and any modifications must be documented.

Attach a copy of the Amendment Log.

- REFERENCE ATTACHMENT G

SECTION 7: RECORDKEEPING

RIPDES Construction General Permit – Parts III.D, III.G, III.J.3.b.iii, & V.O

It is the site owner and site operator's responsibility to have the following documents available at the construction site and immediately available for RIDEM review upon request:

- A copy of the fully signed and dated SESC Plan, which includes:
  - A copy of the General Location Map
    INCLUDED AS ATTACHMENT A
  - A copy of all SESC Plan Site Maps
    INCLUDED AS ATTACHMENT B
  - A copy of the RIPDES Construction General Permit
    INCLUDED AS ATTACHMENT C
  - A copy of any regulatory permits (RIDEM Freshwater Wetlands Permit, CRMC Assent, RIDEM Water Quality Certification, RIDEM Groundwater Discharge Permit, RIDEM RIPDES Construction General Permit authorization letter, etc.)
    INCLUDED AS ATTACHMENT D
  - The signed and certified NOI form or permit application form
    INCLUDED AS ATTACHMENT E
  - Completed Inspection Reports w/Completed Corrective Action Logs
    INCLUDED AS ATTACHMENT F
  - SESC Plan Amendment Log
    INCLUDED AS ATTACHMENT G

SECTION 8: PARTY CERTIFICATIONS

RIPDES Construction General Permit – Part V.G

All parties working at the project site are required to comply with the Soil Erosion and Sediment Control Plan (SESC Plan) for any work that is performed on-site. The site owner, site operator, contractors and sub-contractors are encouraged to advise all employees working on this project of the requirements of the SESC Plan. A copy of the SESC Plan is available for your review at the following location: _____, or may be obtained by contacting the site owner or site operator.

The site owner and site operator and each subcontractor engaged in activities at the construction site that could impact stormwater must be identified and sign the following certification statement.

I acknowledge that I have read and understand the terms and conditions of the Soil Erosion and Sediment Control (SESC) Plan for the above designated project and agree to follow the control measures described in the SESC Plan.

Site Owner:

Insert Company or Organization Name
Insert Name & Title
Insert Address
Insert City, State, Zip Code
Insert Telephone Number, Insert Fax/Email

_____
signature/date

Site Operator:

Insert Company or Organization Name
Insert Name & Title
Insert Address
Insert City, State, Zip Code
Insert Telephone Number, Insert Fax/Email

_____
signature/date

Designated Site Inspector:

Insert Company or Organization Name
Insert Name & Title
Insert Address
Insert City, State, Zip Code
Insert Telephone Number, Insert Fax/Email

_____
signature/date

SubContractor SESC Plan Contact:

Insert Company or Organization Name
Insert Name & Title
Insert Address
Insert City, State, Zip Code
Insert Telephone Number, Insert Fax/Email

_____
signature/date

Insert more contact/signature lines as necessary

ATTACHMENTS

Attachment A - General Location Map

Attachment B - SESC Plan Site Maps

Attachment C - Copy of RIPDES Construction General Permit

Attachment D - Copy of Regulatory Permits

Attachment E - Copy of RIPDES NOI

Attachment F - Inspection Reports and Corrective Action Log

Attachment G - Amendment Log

SESC Plan Inspection Report Instructions

For all projects with at least one (1) acre of soil disturbance, the site owner and operator are required to develop and comply with a site specific Soil Erosion and Sediment Control Plan (SESC Plan) in order to remain in compliance with the Rhode Island Pollutant Discharge Elimination System (RIPDES) General Permit for Stormwater Discharges Associated with Construction Activity (RIPDES Construction General Permit).

This inspection report template has been provided by RIDEM for use by the site operator and designated inspector to document the erosion, runoff, and sediment control conditions at the construction site. It should be customized to meet the requirements in the RIPDES Construction General Permit and the site specific SESC Plan.

Using the Inspection Report

This inspection report is designed to be customized according to the control measures and conditions at the site. On a copy of the site plan, number all stormwater control measures and areas of the site that will be inspected. Include both structural (basins, outlet protection, swales, etc.) and non-structural (construction entrances, perimeter barriers, trash areas, etc.) control measures and areas that will be inspected. Also, identify all point source discharges/outfalls, areas of highly erosive soils, and the priority natural resource areas (i.e. streams, wetlands, mature trees, etc). List each control measure or area to be inspected separately in the site-specific control measure section of the inspection report.

Complete any items that will remain constant, such as the project information and control measure locations and descriptions. Then, print out multiple copies of this customized inspection report to use during the inspections.

When conducting the inspection, walk the site by following the site map and numbered control measure locations for inspection. Also note whether the overall site issues have been addressed. Customize this list according to the conditions at the site.

Minimum Monitoring and Reporting Requirements

All stormwater control measures, disturbed areas, areas used for the storage of materials that are exposed to precipitation (including unstabilized soil stockpiles), discharge locations, and locations where vehicles enter or exit the site must be inspected at least once every seven (7) calendar days and within twenty-four (24) hours after any storm event, which generates at least 0.25-inches of precipitation per twenty four (24) hour period and/or after a significant amount of runoff or snowmelt. An appropriate rain gauge (as may be found on www.wunderground.com or www.nws.noaa.gov (or similar sites)) must be identified and utilized for the determination of the storm events.

General Notes

- A separate inspection report will be prepared for each inspection.
- The Inspection Reference Number shall be a combination of the RIPDES Permit Authorization Number - consecutively numbered inspections.
  ex/ Inspection reference number for the **4**th inspection of a project would be:
  RIR10####-**4**
- Each report will be signed and dated by the inspector and forwarded to the site operator within 24 hours of the inspection.
- Each report will be signed and dated by the site operator and returned to the inspector within 24 hours of receipt.
- It is the responsibility of the site operator to maintain a copy of the SESC Plan, copies of all completed inspection reports, and amendments as part of the SESC Plan documentation at the site during construction.

Corrective Actions

If the SESC Plan Inspection determines that corrective actions are necessary to install or repair control measures, the resultant actions taken must be documented by the site operator. The actions must be recorded in the Corrective Action Log attached to each SESC Plan inspection form. If the site operator disagrees with the corrective action recommendations, it must be documented, with justifiable reasons, in the Corrective Action Log, as well.

Amendments

All SESC Plan Amendments, except minor non-technical revisions, must be approved by the site owner and site operator. The revision must be recorded in the Record of Amendments Log Sheet within the SESC Plan, and dated red-line drawings and/or a detailed written description of the revision must be appended to the SESC Plan. Inspection forms must be revised to reflect all amendments. Update the *Revision Date* and the *Version #* in the footer of the report to reflect amendments made.

The SESC Plan shall be amended whenever there is a change in design, construction, operation, maintenance or other procedure, which has a significant effect on the potential for the discharge of pollutants, or if the SESC Plan proves to be ineffective in achieving its objectives.

******Remember that the regulations are performance-oriented. Even if best management practices are installed on a site according to the approved plan, the site is only in compliance when erosion, runoff, sedimentation, and pollution are effectively controlled.******

SESC Plan Inspection Report

Project Information			
Name			
Location			
DEM Permit No.			
Site Owner	Name	Phone	Email
Site Operator	Name	Phone	Email

Inspection Information			
Inspector Name	Name	Phone	Email
Inspection Date		**Start/End Time**	
Inspection Type ❑ Weekly ❑ Pre-storm event ❑ During storm event ❑ Post-storm event ❑ Other			

Weather Information
Last Rain Event **Date:** **Duration (hrs):** **Approximate Rainfall (in):**
Rain Gauge Location & Source:
Weather at time of this inspection:

Check statement that applies then sign and date below:

☐ **I, as the designated Inspector, certify that this site has been inspected and is in compliance with the site SESC Plan and the RIPDES Construction General Permit.**

☐ **I, as the designated Inspector, certify that this site has been inspected and I have made the determination that the site requires corrective actions before it will be compliant with the site SESC Plan and the RIPDES Construction General Permit. The required corrective actions are noted within this inspection report.**

Inspector:	Print Name	Signature	Date

The Site Operator (identified in the permit application) acknowledges the receipt of this SESC Plan inspection report, and understands the requirements set forth in the RIPDES Construction General Permit regarding the implementation and maintenance of erosion, runoff, and sedimentation controls and pollution prevention measures.

Operator:	Print Name	Signature	Date

Site-specific Control Measures

Number the structural and non-structural stormwater control measures identified in the SESC Plan on the site map and list them below (add as necessary). Bring a copy of this inspection form and numbered site map with you during your inspections. This list will help ensure that you are inspecting all required control measures at your site.

FILL THIS TABLE USING THE SESC PLAN TABLES 2.13 & 3.14.

	Location/Station	**Control Measure Description**	**Installed & Operating Properly?**	**Assoc. Photo/ Figure #**	**Corrective Action Needed (Yes or No; if 'Yes', please detail action required)**
1			❑Yes ❑No		
2			❑Yes ❑No		
3			❑Yes ❑No		
4			❑Yes ❑No		
5			❑Yes ❑No		
6			❑Yes ❑No		
7			❑Yes ❑No		
8			❑Yes ❑No		
9			❑Yes ❑No		
10			❑Yes ❑No		
11			❑Yes ❑No		
12			❑Yes ❑No		
13			❑Yes ❑No		
14			❑Yes ❑No		
15			❑Yes ❑No		

Overall Site Issues

Below are some general site issues that should be assessed during inspections. Please customize this list as needed for conditions at the site. If item is not applicable, please note why.

	Location/Station		**Assoc. Photo/ Figure #**	**Corrective Action Needed (If 'Yes', please detail action required and include location/station)**
1	Have Limits of Disturbance been properly marked and maintained?	❑Yes ❑No ❑ N/A		
2	Have perimeter controls and sediment barriers been adequately installed and maintained?	❑Yes ❑No ❑ N/A		
3	Are storm drain inlets properly protected?	❑Yes ❑No ❑ N/A		
4	Are natural resource areas (e.g., streams, wetlands, trees, etc.) protected with barriers or similar best management practices (BMPs)?	❑Yes ❑No ❑ N/A		
5	Have graveled access entrance and exit drives and parking areas been installed and maintained?	❑Yes ❑No ❑ N/A		
6	Have sediment controls been installed on all steep side slopes and down slopes that are disturbed, especially those adjacent to property lines, drainage conveyances/inlets or water bodies?	❑Yes ❑No ❑ N/A		
7	Are all steep slopes and disturbed areas not actively being worked properly stabilized?	❑Yes ❑No ❑ N/A		
8	Have soils been stabilized where final grading is complete and land disturbance activities have permanently ceased?	❑Yes ❑No ❑ N/A		
9	Have soils been stabilized where land disturbance activities have been halted temporarily and are not planned to resume within the next fourteen (14) days?	❑Yes ❑No ❑ N/A		
10	Have soil/gravel stockpiles been stabilized or isolated?	❑Yes		

	Location/Station		Assoc. Photo/ Figure #	Corrective Action Needed (If 'Yes', please detail action required and include location/station)
		❑No ❑ N/A		
11	Are building materials which possess an elevated pollution potential stored inside or under cover?	❑Yes ❑No ❑ N/A		
12	Are stockpiles of construction wastes properly covered or disposed of to reduce exposure?	❑Yes ❑No ❑ N/A		
13	Are washout facilities (e.g. paint, concrete) available, clearly marked, and maintained?	❑Yes ❑No ❑ N/A		
14	Are vehicle and equipment fueling, cleaning, and maintenance areas free of spills, leaks, or any other deleterious material?	❑Yes ❑No ❑ N/A		
15	Are hazardous materials spill kits in place and are there enough materials as prescribed in the SESC Plan to adequately prevent spills from entering any stormwater drainage systems?	❑Yes ❑No ❑ N/A		
16	Have provisions been made for wind erosion and dust control?	❑Yes ❑No ❑ N/A		
17	Have areas of obvious erosion/channelization been repaired?	❑Yes ❑No ❑ N/A		
18	Are receiving conveyance systems and receiving waters at discharge points free of sediment deposition?	❑Yes ❑No ❑ N/A		
19	Is there evidence of sediment being tracked into the street or off-site?	❑Yes ❑No ❑ N/A		
20	Are non-stormwater discharges (e.g., wash water, dewatering) properly controlled?	❑Yes ❑No ❑ N/A		
21	Are post-construction	❑Yes		

	Location/Station		**Assoc. Photo/ Figure #**	**Corrective Action Needed (If 'Yes', please detail action required and include location/station)**
	stormwater practices protected from sedimentation prior to final stabilization and bringing them online?	❑No ❑ N/A		
22	Are infiltrating stormwater practices and qualifying pervious areas protected during construction activities to avoid compacting soil?	❑Yes ❑No ❑ N/A		
23	(Other)	❑Yes ❑No ❑ N/A		

Appendix F. Site Constraint Map (and Reports)

'Constraints' mean any physical, technical, legal, environmental, topographical or other consideration that may potentially affect, limit, restrict or confine the location or other aspect of the project, within the project area and areas beyond the project that may be impacted by the project as directed by site conditions or the regulatory agency(ies).

Constraints are identified to ensure a comprehensive understanding of the project and surrounding areas. The Site Constraints Report, if required, contains information which is important in the identification of features and sensitive areas, e.g. elevated topography; steep slopes; surface waters and bodies of water such as rivers and lakes; designated or protected areas; existing infrastructure such as roads and railways; archaeological and heritage sites such as national, state or local monuments; and many more.

The Site Constraints Report may also contain information which will be considered at a later stage in the project, such as local historical sites, sites of local ecological importance and historical landscapes.

Feedback gathered from consultation, as well as desktop studies and expert input, all fed into the completion of the Site Constraints Report. A key part of the report is the associated mapping that graphically shows the constraints that have been identified within the study area to date.

The site constraints maps produced, as well information for a constraints report, can be accessed using the below links. This mapping is also available for viewing on the Rhode Island Data Atlas at http://www.edc.uri.edu/atlas/.

Information that should be considered for inclusion on a Site Constraint Map can include, but not be limited to the following:

Receiving Waters - *Show the waterbody(s) that will receive stormwater from the site, including streams, rivers, lakes, coastal waters, and wetlands. Note any stream crossings, if applicable.*

MS4s -Show the separate storm sewer system or drainage system that stormwater from the site could discharge to and the waterbody(s) that receive discharges from the storm sewer or drainage system.

Impaired Water Bodies – Show any of the waterbodies above are impaired (303(d) listed) and/or subject to Total Maximum Daily Loads (TMDLs - visit http://www.dem.ri.gov/programs/benviron/water/quality/index.htm for more information and a list of Rhode Island impaired waters and TMDL Studies).

Natural Heritage Area Information *- determine if the site is within or directly discharges to a Natural Heritage Area (NHA).*
Historic Preservation/Cultural Resources – *Show any historic properties, historic properties, historic cemeteries or cultural resources on or near the construction site (Contact the Rhode Island Historic Preservation Officer (http://www.preservation.ri.gov/) or Tribal Historic Preservation Officer (http://grants.cr.nps.gov/THPO_Review/index.cfm) for more information.*
Site Features and Sensitive Areas to be Protected - *Show all site features and sensitive resources that exist at the site such as* ***floodplains, steep slopes (>15%), erodible soils, wetlands, hydric soils, surface waters, and their riparian buffers, specimen trees, natural and existing vegetation, forest areas and stream crossings.***

Limits of Disturbance and proposed Site Clearing Limits – show existing vegetation that shall be protected and left in place, in accordance with the clearing limits being proposed. Show natural features identified earlier and how each will be protected during construction activity. Show where topsoil will be protected/preserved.

Waste Storage, Vehicle Refueling and Maintenance, Stockpiles and other Areas – Show where activities that have a polluting potential will be.

Appendix G. Spill Prevention, Control and Countermeasures Plans (SPCC Plans)

The SPCC regulations, found in 40 CFR 112, require the owners and operators of facilities to prepare and implement spill prevention plans to avoid oil spills into navigable waters or adjoining shorelines. SPCC plans must identify operating procedures in place and control measures installed to prevent oil spills, and countermeasures to contain, clean up, or mitigate the effects of any oil spills that occur. The plan must be updated as conditions change at your construction site.

Any business that maintains a total aboveground oil storage capacity of greater than 1,320 gallons, or a total underground oil storage capacity of greater than 42,000 gallons, where there is a reasonable potential for a discharge to reach navigable waters is subject to SPCC regulatory requirements.

Statutory Authority: The *Clean Water Act of 1977* and its amendments, primarily the *Water Quality Act of 1987, and the Oil Pollution Act of 1990.*
Regulations: The requirements for the development and implementation of SPCC Plans are found in 40 CFR:
• **Part 112** – Requirement to prepare and implement an SPCC Plan.
• **Part 110** – Requirements for spill reporting

EPA rules that require oil Spill Prevention Control and Countermeasures (SPCC) are nationwide rules that apply in all 50 states. A construction site with a total above-ground oil storage capacity of more than 1,320 gallons of oil (counting only tanks that equal or exceed 55 gallons) is subject to EPA's SPCC rules if a spill could discharge oil to U.S. navigable waters or adjoining shorelines. The rules require all such jobsites to have a comprehensive SPCC Plan detailing how the contractor will store oil and both control and clean up any spills

In RI, active construction sites that meet these criteria are required to complete SPCC plans.

Smaller sites and all projects implementing a Soil Erosion Sediment Control Plan (SESC Plan) that are not required to develop a formal SPCC plan must at a minimum address the following:

- All chemicals and/or hazardous waste material must be stored properly and legally in covered areas, with containment systems constructed in or around the storage areas.
- Areas must be designated for materials delivery and storage.
- All areas where potential spills can occur and their accompanying drainage points must be described.
- The Applicant (Owner and Operator) must establish spill prevention and control measures to reduce the chance of spills, stop the source of spills, contain and clean-up spills, and dispose of materials contaminated by spills.

Appendix H. Soil Classification Systems

Description

Soil is an aggregate of loose mineral and organic particles being distinguished from rock, which exhibits strong permanent cohesion between the mineral particles. The primary components of soil are gravel, sand, silt, and clay. Organic material is commonly present in surface samples of soil. A soil's properties are dependent upon its composition from these components.

A number of soil classification systems have been established by different organizations to be used for specific purposes. These systems index various qualities of the soil, depending on need. Only three will be discussed here.

- Textural Soil Classification System (USDA)
- American Association of State Highway Transportation Officials System (AASHTO)
- Unified Soil Classification System (USCS)

The actual classification of a soil will depend on the percentage of each constituent (i.e. gravel, sand, silt and clay).

Indexing of the soil is needed to apply some of the qualitative and quantitative property relationships contained in these classification systems. Indexed properties are of two types:

- Grain properties -- include particle size distribution, density and mineral composition. (Particle size distribution is determined by a sieve test for coarse soils and a dispersion test for fine soils.)
- Aggregate properties -- are weight-volume relationships. The aggregate properties are derived from the percentages of solid material in the soil sample in relation to the air-filled and water-filled voids. The aggregate soil properties include soil porosity, void ratio, water content, degree of saturation, soil density, dry density, bulk density, compacted density, percent pore space and the density index.

The most commonly used indexed property is particle size.

Specifications

- The Textural Soil Classification System by the USDA (see **Figure H-1**) uses a qualitative description of each soil's texture and ignores the presence of gravel. A mechanical analysis is performed in the laboratory and a percentage obtained for each of the soil constituents. Total amount of sand, from coarse to very fine, is used, along with silt and clay contents, to determine the soil textural name from the USDA textural triangle. This system is commonly used for agricultural and farming measures. Since this system provides only a general qualitative description, other methods have been developed which more fully reflect the mechanical properties of the soil.
- The AASHTO system (see **Figure H-2**) classifies soils according to the properties that affect roadway construction and maintenance. The fraction of mineral soil that is less than 3 inches in diameter is classified in one of seven groups from A-1 through A-7 on the basis of grain-size distribution, liquid limit, and plasticity index. Soils in Group A-1 are coarse grained and low in silt and clay. Soils in Group A-7 are fine grained. Highly organic soils are classified on the basis of visual inspection and assigned a Group A-8 classification. The AASHTO System classifies soils specifically for their engineering properties.
- The Unified System (see **Figure H-3**) classifies soils according to their suitability for construction material, including its stability, permeability, resistance to erosion,

compressibility and ability to bear loads without deformation. It considers grain-size distribution, plasticity index, liquid limit, and organic matter content in the soil. The Unified System is based on that portion of soil having particles smaller than 3 inches in diameter. Soil classes include coarse-grained soils (GW, GP, GM, GC, SW, SP, SM, SC), fine-grained soils (ML, CL, OL, MH, CH, OH), and highly organic soils (PT). Borderline soils require a dual classification symbol. The Unified System classifies soils specifically for their engineering properties.

Figure H-1. USDA Textural Triangle

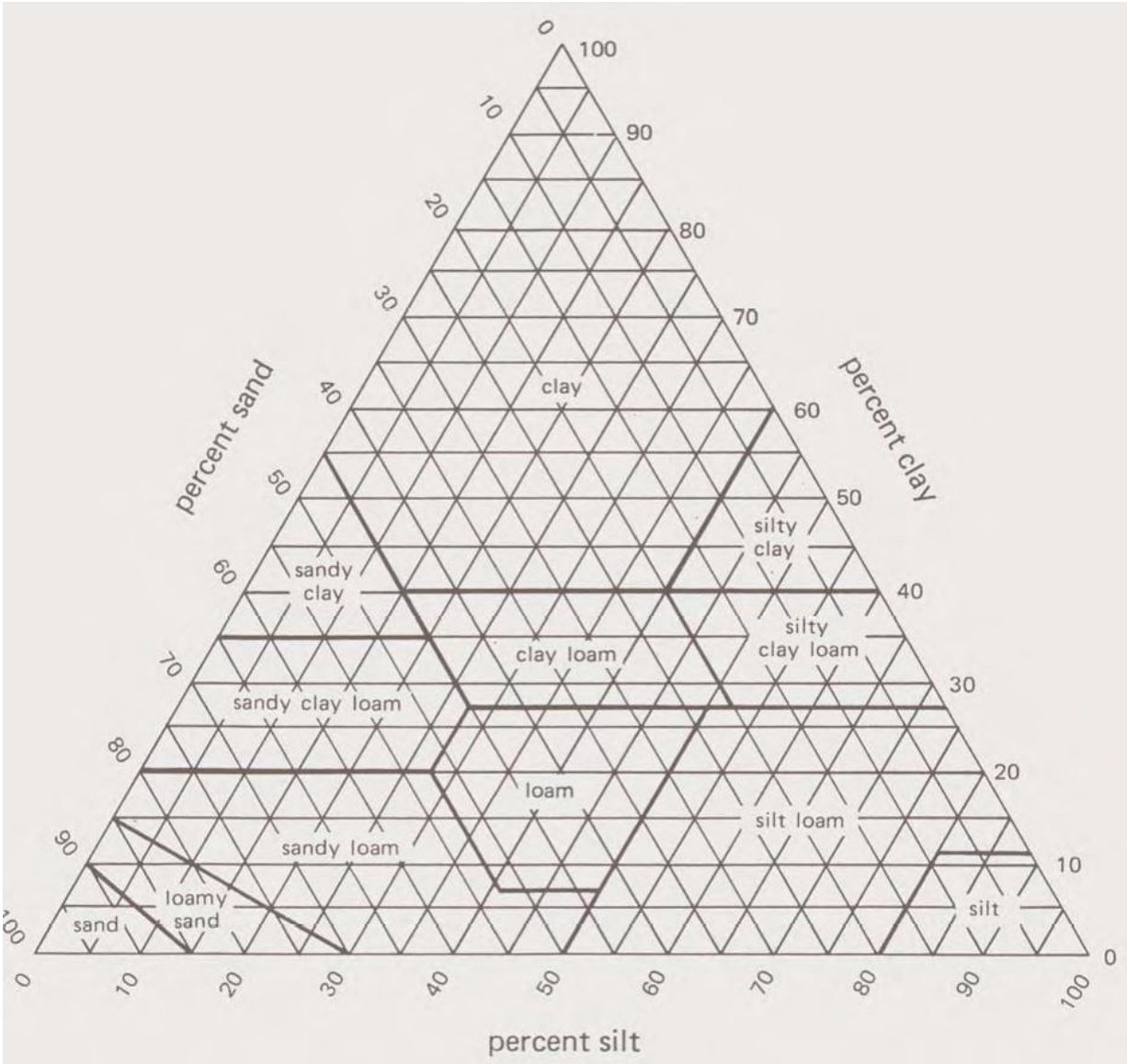

Figure H-2. AASHTO Soil Classification System

Classification procedure: Using the test data, proceed from left to right in the chart. The correct group will be found by process of elimination. The first group from the left consistent with the test data is the correct classification. The A-7 group is subdivided into A-7-5 or A-7-6 depending on the plastic limit. For plastic limit $w_p = w_l - I_p$ less than 30, the classification is A-7-6. For plastic limit $w_p = w_l - I_p$ greater than or equal to 30, it is A-7-5. NP means non-plastic.

	granular materials (35% or less passing no. 200 sieve)							silt-clay materials (more than 35% passing no. 200 sieve)				
	A-1		A-3	A-2				A-4	A-5	A-6	A-7	A-8
	A-1-a	A-1-b		A-2-4	A-2-5	A-2-6	A-2-7				A-7-5 or A-7-6	
sieve analysis: % passing												
no. 10	50 max											
no. 40	30 max	50 max	51 min									
no. 200	15 max	25 max	10 max	35 max	35 max	35 max	35 max	36 min	36 min	36 min	36 min	
characteristics of fraction passing no. 40:												
w_l: liquid limit				40 max	41 min	40 max	41 min	40 max	41 min	40 max	41 min	
I_p: plasticity index	6 max		NP	10 max	10 max	11 min	11 min	10 max	10 max	11 min	11 min	
usual types of significant constituents	stone fragments gravel and sand		fine sand	silty or clayey gravel and sand				silty soils		clayey soils		peat, highly organic soils
general subgrade rating	excellent to good					fair to poor						unsatisfactory

Figure H-3. Unified Soil Classification System

	Major Divisions		Group Symbol	Group Name
Coarse Grained Soils >50% Retained on No.200 Sieve	Gravel > 50% of Coarse Fraction Retained on No.4 Sieve	Clean Gravel	GW	Well-Graded Gravel, Fine to Coard Gravel
			GP	Poorly-Graded Gravel
		Gravel with Fines	GM	Silty Gravel
			GC	Clayey Gravel
	Sand >50% of Coarse Fraction Passes No.4 Sieve	Clean Sand	SW	Well-Graded Sand, Fine to Coarse Sand
			SP	Poorly Graded Sand
		Sand with Fines	SM	Poorly Graded Sand
			SC	Clayey Sand
Fine Grained Soils >50% Passes No.200 Sieve	Silt and Clay Liquid Limit Less than 50	Inorganic	ML	Silt
			CL	Clay
		Organic	OL	Organic Silt, Organic Clay
	Silt and Clay Liquid Limit 50 or More	Inorganic	MH	Organic Silt, Organic Clay
			CH	Organic Silt, Organic Clay
		Organic	OH	Organic Silt, Organic Clay
	Highly Organized Soils		PT	Peat

Appendix I. Revised Universal Soil Loss Equation -- RUSLE2

Description

RUSLE is the Revised Universal Soil Loss Equation (RUSLE) developed by the U.S. Department of Agriculture (USDA)-Agricultural Research Service (ARS). RUSLE2 is the most recent version of this planning and analysis tool.

RUSLE2 estimates rates of rill and interrill soil erosion caused by rainfall and its associated overland flow. Detachment (separation of soil particles from the soil mass) by surface runoff erodes small channels (rills) across the hillslope. Erosion that occurs in these channels is called rill erosion. Erosion on the areas between the rills, is called interrill erosion. Detachment on interrill areas is by the impact of raindrops and waterdrops falling from vegetation. The detached particles (sediment) produced on interrill areas is transported laterally by thin flow to the rill areas where surface runoff transports the sediment downslope to concentrated flow areas (channels).

RUSLE2 was developed primarily to guide conservation planning, inventory erosion rates and estimate sediment delivery. RUSLE2 has evolved from a series of previous erosion prediction technologies.

Values computed by RUSLE2 are supported by accepted scientific knowledge and technical judgment, are consistent with sound principles of conservation planning, and result in good conservation plans. RUSLE2 is also based on additional analysis and knowledge that were not available when RUSLE1 was developed. RUSLE2 is based on science and judgment that is superior to that of RUSLE1. We learned things from RUSLE1 that are incorporated into RUSLE2.

The major visible change in RUSLE2 is its new, modern graphical user interface. It makes the model easy to use, but is extremely powerful in the information that it displays and the types of situations that it can represent. RUSLE2 is a very powerful model yet it uses very simple, easy to obtain inputs. Riprap is a permanent, durable, erosion-resistant ground cover of large.

Specifications

RUSLE2 Components

RUSLE2 includes several components:

- The computer program that solves the many mathematical equations used by RUSLE2.
- The interface that connects the user to RUSLE2.
- The database of input values -- the user selects entries from the database to describe site-specific field conditions.
- Mathematical equations, scientific knowledge, and technical judgment on which RUSLE2 is based.

RUSLE2 is Land Use Independent

RUSLE2 is based on equations that describe how basic features like plant yield, vegetative canopy and rooting patterns, surface roughness, mechanical soil disturbance, amount of biomass on the soil surface and in the upper layer of soil, and related factors affect rill and interrill erosion. RUSLE2 takes advantage of the fact that erosion is directly related to the forces applied to the soil by erosive agents in relation to the soil's resisting forces regardless of the land use. RUSLE2 can be applied to cropland, rangeland, disturbed forestland, mined land, construction sites, reclaimed land, landfills, military training sites, parks, and any land where mineral soil is exposed to the direct forces of waterdrop impact and surface runoff generated by rainfall intensity being greater than the infiltration rate of water into the soil.

Input to RUSLE2 -- Factors Affecting Erosion

The four major factors of climate, soil, topography, and landuse determine rates of rill and interrill erosion. A RUSLE2 user applies RUSLE2 to a specific site by describing field conditions at the site for these four factors. RUSLE2 uses this field description to compute erosion estimates.

- Climate: The most important climatic variable used by RUSLE2 is rainfall erosivity, which is related to rainfall amount (how much it rains) and intensity (how hard it rains). Another important climatic variable is temperature because temperature and precipitation together determine the longevity of biological materials like crop residue and applied mulch used to control erosion. Climate varies by location, and choosing a location in RUSLE2 chooses the erosivity, precipitation, and temperature values needed to apply RUSLE2 at a particular site.
- Soils: Soils vary in their inherent erodibility as measured in a standard test involving a "unit plot." A unit plot is 72.6 ft (22.1 m) long on a 9% slope and is maintained in continuous tilled fallow (no vegetation) using periodic tillage up and down slope to leave a "seedbed-like" soil condition. The USDA-NRCS has assigned soil erodibility values for most cropland and similar soils across the US. RUSLE2 includes a procedure for estimating soil erodibility for highly disturbed soils at construction sites and reclaimed mined land. The RUSLE2 user typically selects a soil by soil-map unit name from a list of soils in the RUSLE2 database.
- Topography: Slope length, steepness, and shape are the topographic characteristics that most affect rill and interrill erosion. Site-specific values are entered for these variables.
- Land Use: Land use is the single most important factor affecting rill and interrill erosion because type of land use and land use condition are features that can be most easily changed to reduce excessive erosion. RUSLE2 uses the combination of cover-management (cultural) measures and support measures to describe land use. Cover-management measures affect both the forces applied to the soil by erosive agents and the susceptibility of the soil to detachment. Important features on a construction site include whether or not the land is bare, the soil material is a cut or fill, mulch has been applied, or the slope has been recently reseeded. Changes can be made in key variables such as mulch application rate so that the measure fits the local climate, soil, and other conditions. Support measures include ridging (e.g., contouring), vegetative strips and barriers (e.g., buffer strips, fabric fence, gravel bags), runoff interceptors (e.g., terraces, diversions), and small impoundments (e.g., sediment basins, impoundment terraces). These measures reduce erosion primarily by reducing the erosivity of surface runoff and by causing deposition. Support measures are selected from a list in the RUSLE2 database. Site-specific information, such as the location of a diversion on the hillslope, is entered as required for each measure.

Notes on Application/Installation

RUSLE2 is very easy to use. With the exception of topography, the RUSLE2 user describes the site-specific field conditions by selecting entries from menus. When a menu selection is made, RUSLE2 "pulls" values stored in the RUSLE2 database and uses them as input values to compute erosion. The user enters site-specific values for slope length and steepness to represent topography.

The RUSLE2 user conveniently selects information in the RUSLE2 database to describe variables at a specific field site. The RUSLE2 user is not required to collect field data on these variables.

To download a current version of RUSLE2 software, go to the Purdue University website at: (http://fargo.nserl.purdue.edu/rusle2_dataweb/About_RUSLE2_Technology.htm)

For additional information on the use and development of RUSLE2, go to the USDA Agricultural Service website at: http://www.ars.usda.gov/Research/docs.htm?docid=6010

Appendix J. Chemical Treatment for Erosion and Sediment Control

Description

Chemical stabilizers, polymers and flocculants

Chemical stabilizers, polymers and flocculants are readily available on the market and can be easily applied to the surface of the soil for a variety of purposes.

The guidelines listed below apply to all construction sites that plan to use treatment chemical s as part of their erosion and sedimentation control strategy. Treatment chemicals are available for stabilizing soil in areas where vegetation cannot be established, and can also be used to help to enhance settling in temporary stormwater treatment systems. Flocculation is a process wherein suspended clays or fine grained sediments (colloids) are formed into aggregates and come out of suspension as flocs or flakes, due to the addition of a clarifying agent. As water flows over the flocculant, the flocculant binds with fine suspended sediments, then these heavier clumps of sediment settle out of suspension or attach to a substrate. Flocculants are polymers that are used to increase the efficiency of settling. For some projects operators may be required to meet end-of-pipe turbidity limits based on applicable water quality criteria for the receiving stream. Where a project is subject to end-of-pipe turbidity limits, operators may propose using treatment chemicals to ensure that they are discharging in compliance with these limitations.

Applications

Soil Stabilization

- Soft armoring--used as a soil binder to enhance performance of coir netting, erosion control blankets or turf reinforcement mats in higher velocity applications.
- Hydromulching--polymers are added to the seed, fertilizer, mulch mixture as a binder or tackifier.
- Loose mulches--can assist with binding mulch, seed and soil together.
- Dust control--used in conjunction with water to bind very fine particulate and increase soil particle size.

Stormwater Treatment

- Systems designed to treat turbid water, clarifying runoff as it is conveyed through the stormwater treatment train.

Settling/Water Clarification

- Used in conjunction with various water clarification devices and treatment systems to remove suspended sediment.

Particle Collection

- Polymers are used for particle removal in dispersion fields, in conjunction with particle curtains, baffles grids and ditch check systems.

Sediment Control

- Inlet Protection--polymers used an enhancement in to prevent undercutting and minimize failure in these critical applications.
- Sediment Retention Barriers--a double row of silt fence or other sediment barrier is installed. It is then filled with polymer treated wood chips, mulch or other organic material.
- Rock checks--performance can be enhanced using jute matting, treated with polymers applied over the entire surface of the check structure.

- Outlet protection--can be used in conjunction with flow dissipaters for water clarification at pipe of box culvert outfalls.
- Dredging--polymers are often used to help clarify turbid water before discharge.
- Particle Collection--often used after the settling pond for final polishing of water to remove remaining fine particulate.
- Mud & Sediment Removal--polymers are often added to highly saturated sludge, thickening the material and making it much easier to remove.

Specifications

Limiting Risks of Toxicity in the Environment

Because site operators may need to use treatment chemicals at their sites, this guidance will ensure that these chemicals are properly used and will not lead to adverse environmental impacts. With the proper operator training and appropriate usage, chemicals can be used properly on construction sites to avoid risk to aquatic species. Knowledge from toxicity studies suggest that polymers are highly variable as to their toxic effects on aquatic organisms. While it is recognized that there is the potential for problems due to improper application of polymers, it has also been determined that when properly used, environmental impacts from polymers or flocculants should not occur through the use of passive treatment systems. The dose ranges where polymers are typically utilized on construction sites are well below the chronic toxicity levels. The utilization of polymers on construction sites has occurred for a significant period of time and they are currently being used on construction sites throughout the nation. The state and local permitting authorities will need to carefully consider the appropriateness of authorizing the use of these materials where there are sensitive or protected aquatic organisms in receiving waters, including threatened or endangered species and their critical habitat. Permitting authorities may require additional measures including but not limited to the following: establishing specific controls on dosage and usage, requiring protocols for residual toxicity testing, requiring prior approval before the use of particular polymers, and requiring specific training requirements for site operators.

Acute Toxicity Concerns

This guidance in this handbook prohibits the discharge of a specific class of chemicals (i.e., cationic treatment chemicals), except in cases where specific regulatory approval has been granted. Current data suggests that the cationic treatment chemicals are acutely toxic to aquatic species and the fact that the use of chemicals on construction sites is far different from the type of highly engineered systems used for water and wastewater treatment. Cationic treatment chemicals are polymers, flocculants, or other chemicals that contain an overall positive charge. Among other things, they are used to reduce turbidity in stormwater discharges by chemically bonding to the overall negative charge of suspended silts and other soil materials and causing them to bind together and settle out. Common examples of cationic treatment chemicals are chitosan and cationic polyacrylamide (PAM).

The U.S. Environmental Protection Agency (EPA) has conducted research into the relative toxicity of chemicals commonly used for treatment of construction stormwater discharges. The research conducted by the EPA focused on different formulations of chitosan, a cationic compound, and both cationic and anionic PAM. In summary, the studies found significant toxicity resulting from use of chitosan and cationic PAM in laboratory conditions, and significantly less toxicity associated with using anionic PAM. The lethality in fish species results when the positive charge of the cationic chemical binds to the negative charge of the fish gills. The adhesion of the cationic chemical to the gills interferes with oxygen uptake resulting in suffocation. In comparison to cationic chemicals, the use of non-oil based PAM has shown minimal toxicity even at 10 times the normal erosion control concentration, 10 ppm. (See Weston et. Al., Toxicity of Anionic

Polyacrylamide Formulations When Used for Erosion Control in Agriculture, Journal of Environmental Quality, Vol 38 (2009), p. 238-247.) Refer to EPA's Office of Research and Development memorandum entitled Survey of Polymer Toxicity for Construction General Permit (CGP) Work Group (November 2011) for additional information.

EPA's research has lead to the conclusion that the use of cationic treatment chemicals at construction sites requires additional safeguards. In recognition of the fact that some operators have successfully used cationic treatment chemicals to achieve significant reductions in sediment discharges and protection of water quality, operators may request specific regulatory approval to use cationic treatment chemicals. Such requests must identify the controls and safeguards that will be employed to ensure that use of such chemicals does not lead to toxic effects to aquatic organisms in receiving waters. The permitting authorities may determine that additional controls are necessary or may in some cases prohibit the use of cationic chemicals altogether.

The sources of information for this chapter are:

- Environmental Protection Agency 2012 Construction General Permit
- NHDES – Alteration of Terrain Bureau, NH Code of Administrative Rules, Methods for Erosion and Sediment Control During Terrain Alteration Activities ENV-Wq 1506.12 – Sediment Control Methods: Flocculants

Notes on Application/Installation

Minimum Requirements

If a site operator plans to use polymers, flocculants, or other treatment chemicals during construction the site SWPPP must address the following minimum requirements.

- Treatment chemicals shall not be applied directly to or within 100 feet of any surface water.
- Use conventional erosion and sediment controls prior to and after the application of treatment chemicals. Use conventional erosion and sediment controls prior to chemical addition to ensure effective treatment. Chemicals may only be applied where treated stormwater is directed to a sediment control (e.g. sediment basin, perimeter control) prior to discharge.
- Sites shall be stabilized as soon as possible using conventional measures to minimize the need to use chemical treatment.
- Select appropriate treatment chemicals. Chemicals must be selected that are appropriately suited to the types of soils likely to be exposed during construction and to the expected turbidity, pH, and flow rate of stormwater flowing into the chemical treatment system or treatment area. Soil testing is essential. Using the wrong form of chemical treatment will result in some form of performance failure.
- Minimize discharge risk from stored chemicals. Store all treatment chemicals in leak-proof containers that are kept under storm-resistant cover and surrounded by secondary containment structures (e.g., spill berms, decks, spill containment pallets), or provide equivalent measures, designed and maintained to minimize the potential discharge of treatment chemicals in stormwater or by any other means (e.g., storing chemicals in covered area or having a spill kit available on site).
- Comply with state/local requirements. Comply with relevant state and local requirements affecting the use of treatment chemicals. If you have been authorized by the RIDEM to use cationic treatment chemicals, include the specific controls and implementation procedures designed to ensure that your use of cationic treatment chemicals will not lead to a violation of water quality standards. See Part B below for additional information

regarding the specific concerns associated with the use of cationic polymers.

- Use chemicals in accordance with good engineering measures and specifications of the chemical provider/supplier. You must also use treatment chemicals and chemical treatment systems in accordance with good engineering measures, and with dosing specifications and sediment removal design specifications provided by the provider/supplier of the applicable chemicals, or document specific departures from these measures or specifications and how they reflect good engineering measure. At a minimum your SWPPP must specifically address the following.
  - Manufacturer's name and Product name for each treatment chemical proposed for use at the site
  - Material safety data sheets (MSDS) for each proposed treatment chemical
  - The results of third party toxicity testing of the materials proposed for use at the site conducted in accordance with 40 CFR 136
  - Proof from the manufacturer that the treatment chemicals are anionic
  - Certification by the site owner and operator that all proposed treatment chemicals are the same as those used in the toxicity tests and will not be altered in any way for the project
  - An explanation as to why conventional erosion control measures, alone or in combination, will not be sufficient to prevent turbidity violations and sedimentation in downstream receiving waters
  - A treatment chemical application plan prepared in consultation with the chemical treatment manufacturer(s) or authorized manufacturer's representative which includes the following.
    - A plan of the project showing where the treatment chemicals will be applied and the name, location, and distance to all surface waters immediately downstream that might receive discharge from the areas treated
    - The expected start and end dates for using treatment chemicals, including a schedule and list of measures which will be taken to stabilize the site as soon as possible using conventional stabilization measures
    - Test results for representative soils from the site, and recommendations from the manufacturer based on the soil tests, indicating the type of treatment chemical and the recommended application rate
    - Frequency, method, and rates of application designed to ensure that treatment chemical concentrations will not exceed 50% of the IC25 or NOEC toxicity values, whichever is less, for the treatment chemicals proposed;
    - Frequency of inspection and maintenance of the treatment chemical application system
    - Method for collection, removal, and disposal or stabilization of settled particles to prevent resuspension
- Ensure proper training. Ensure that all persons who handle and use treatment chemicals at the construction site are provided with appropriate, product-specific training. Among other things, the training must cover proper dosing requirements.
- Provide proper SWPPP documentation. You must document in your SWPPP the details of your treatment chemical usage throughout the course of the project and keep weekly records demonstrating that you are using the treatment chemicals in accordance with the site SWPPP and in accordance with any additional regulatory requirements, if applicable. At a minimum weekly records pertaining to treatment chemical usage must address the following.
  - The type and quantity of treatment chemicals used

- The date, duration of discharge, and estimated discharge rate
- The total volume of water treated
- The concentration of treatment chemical(s) in the discharge, with supporting calculations
- A comparison of the amount of the treatment chemical(s) used to that which was originally proposed in the approved SWPPP and an explanation for any deviations from the plan.

Appendix K. Turf Reinforcement Mats

Description

Turf Reinforcement Mats are permanent rolled erosion control products (RECPs) and are designed to reinforce vegetation at the root and stem level, reinforcing the turf and make it less vulnerable to erosion. Turf Reinforcement Mats are designed to provide a vegetated alternative to hard armor systems. By providing permanent root reinforcement, areas stabilized by turf reinforcement mats can handle substantially higher flows than unreinforced vegetation. When compared to hard armor systems such as rock riprap, turf reinforcement mats can provide many advantages, including cost savings, improved aesthetics and ease of maintenance. Turf Reinforcement Mats allow vegetation to be used for permanent protection in drainage swales, for shoreline protection, and on steep slopes. Turf Reinforcement Mats are often used when site flow conditions rule out the use of unreinforced vegetation.

TRMS are used to control erosion and stabilize soil in stormwater detention ponds, small channels, streambanks, and shorelines.

Specifications

It is extremely important to base designs on correct engineering data, including flow velocities, peak flow periods, rainfall data, etc. Many manufacturer's design software programs can assist with proper product selection.

Notes on Application/Installation

- Turf Reinforcement mats must never be installed over existing vegetation. Any existing vegetation should be tilled under or removed prior to installation.
- Large rocks and other debris must be removed prior to installation. Failure to remove this material can cause tenting and result in poor blanket to soil contact.
- After final grading, apply fertilizer, if needed, and seed.
- Turf Reinforcement mats should then be installed over the prepared seedbed. Be sure to follow manufacturer's installation instructions.
- It is important so secure all overlaps to trench blankets in at all high points. The required number of staples must be used to secure the blankets. They should be installed so that all runoff flows over the top of the installation and not underneath.
- Inspect to assure that mats are securely fastened and trenched in.
- Irrigation will be necessary during dry periods in order to assure proper vegetative growth.
- Vegetation should be maintained appropriately. Because of the three-dimensional nature of turf reinforcement mats, it is recommended that early mowing be at higher levels. As the turf develops, mowers can be lowered gradually. In the long term, over time, reinforced turf areas can be mowed at the same level of adjacent areas.

Appendix L. Riprap

Description

Riprap is a permanent, erosion-resistant ground cover of large, loose, angular stone designed to: (1) slow water velocities and enhance the potential for infiltration, (2) protect the soil surface from the erosive forces of concentrated runoff, high velocity stream flows and wave action, and (3) stabilize slopes. It is often employed at storm drain outlets, on channel banks and/or bottoms, roadside ditches, permanent slope drains, at the toe of slopes, or on steep slopes in need of permanent stabilization.

Specifications

Materials

Regardless of the size used, riprap shall be composed of a well-graded mixture down to the one-inch size particle such that 50% of the mixture by weight shall be larger than the d50 size as determined from the design procedure. The diameter of the largest stone size in such a mixture shall be 1.5 times the d50 size. A well-graded mixture as used herein is defined as a mixture composed primarily of the larger stone sizes but with a sufficient mixture of other sizes to fill the progressively smaller voids between the stones. The RIDOT riprap standards are examples of well graded mixtures.

Individual rock fragments shall be dense, sound and free from cracks, seams and other defects conducive to accelerated weathering. The rock fragments shall be angular in shape. The least dimension of an individual rock fragment shall be not less than one-third the greatest dimension of the fragment. The stone shall be of such quality that it will not disintegrate on exposure to water or weathering, be chemically stable, and shall be suitable in all other respects for the purpose intended. The bulk specific gravity (saturated surface -dry basis) of the individual stones shall be at least 2.65.

Riprap shall consist of broken stone produced from sound ledge or large boulders with at least three fractured faces on each particle and shall be free from overburden, spoil, shale or organic material. The stone shall have a minimum density of 160 pounds per cubic foot. It shall be angular in shape with its minimum dimension not less than one third of the maximum dimension. Stone for Placed Riprap shall have one flat face and shall be roughly square or rectangular to facilitate laying up.

Individual rock fragments shall be dense, sound and free from cracks, seams and other defects conducive to accelerated weathering. The rock fragments shall be angular in shape. The least dimension of an individual rock fragment shall be not less than one-third the greatest dimension of the fragment. The stone shall be of such quality that it will not disintegrate on exposure to water or weathering, be chemically stable, and shall be suitable in all other respects for the purpose intended. The bulk specific gravity (saturated surface -dry basis) of the individual stones shall be at least 2.65.

Riprap gradations shall be specified by either the DOT Standard Specifications, or other established published standards. Regardless of the standard used, riprap shall be composed of a well-graded mixture down to the one-inch size particle such that 50% of the mixture by weight shall be larger than the d50 size as determined from the design procedure. The diameter of the largest stone size in such a mixture shall be 1.5 times the d50 size. A well-graded mixture as used herein is defined as a mixture composed primarily of the larger stone sizes but with a sufficient mixture of other sizes to fill the progressively smaller voids between the stones. The DOT riprap standards are examples of well graded mixtures (see **Figure L-1**).

Figure L-1. Specification for Riprap for Stone Slope Protection
(National Stone Association manual; "Quarried Stone for Erosion and Sediment Control," 1978)

Graded Riprap Stone			
	Size Inches (Square Openings)		
National Stone Association Modified NSA No	100% Passing	0-50% Passing	0-15% Passing
R-1	2	1	No. 4
R-2	4	2	1
R-3	8	4	2
R-4	14	7	4
R-5	20	10	6
R-6	26	13	8
R-7	34	18	14
R-8	50	24	18

Planning Considerations

Since riprap is used where erosion potential is high, sequence construction so that the riprap is placed prior to exposed areas being subject to erosive forces such as water. As a result, riprap-lined areas should typically be completed early in the construction project. Plan to disturb areas where riprap is to be placed only when final preparation and placement of the riprap will follow immediately behind the initial disturbance. Where riprap is used for outlet protection, plan to place the riprap before or in conjunction with the construction of the pipe or channel so that it is in place when the pipe or channel begins to function.

Notes on Application/Installation

The elapsed time between construction of the embankment and the placement of the riprap shall be limited to that required to permit the orderly construction of the embankment and to preclude the mixing of embankment and riprap materials.

Subgrade Preparation

Prepare the subgrade for the riprap, bedding, filter or geotextile to the required lines and grades. Compact any fill required in the subgrade to a density approximating that of the surrounding undisturbed material or at least 90% of its maximum density. Remove brush, trees, stumps and other objectionable material.

Geotextile

Use only geotextiles that were stored in a clean dry place, out of direct sunlight, with the manufacture's protective cover in place to ensure the geotextile was not damaged by ultraviolet light. Place the geotextile in accordance with the manufacturer's recommendations including recommended overlaps and pinning to ground.

Bedding

Immediately after slope preparation, install the bedding materials. Spread the bedding materials in a uniform layer to the specified depth. Where more than one distinct layer of filter or bedding material is required, spread the layers so that there is minimal mixing between materials.

Stone Placement

Immediately after placement of the filter blanket, bedding and/or geotextile, place the riprap to its full course thickness in one operation so that it produces a dense well-graded mass of stone with a minimum of voids. The desired distribution of stones throughout the mass may be obtained by selective loading at the quarry, controlled dumping of successive loads during final placing, or by a combination of these methods. Do not place the riprap in layers or use chutes or similar methods to dump the riprap which are likely to cause segregation of the various stone sizes.

Take care not to dislodge the underlying material when placing the stones. When placing riprap on a geotextile take care not to damage the fabric. If damage occurs, remove and replace the damaged sheet.

Ensure the finished slope is free of pockets of small stones or clusters of large stones. Hand placing may be necessary to achieve the required grades and a good distribution of stone sizes. Ensure the final thickness of the riprap blanket is within plus or minus 0.25 of the specified thickness.

Gradation

After determining the riprap size that will be stable under the flow conditions, consider that size to be a minimum and then, based on riprap gradations actually available in the area, select the size or gradations that equal or exceed the minimum size.

Thickness

The minimum thickness of the riprap layer shall be 1.5 times the maximum stone diameter but not less than 12 inches.

Riprap for Lakes and Ponds Subject to Wave Action

Riprap may be used for shoreline protection on lakes and ponds subject to wave action. The waves affecting the shoreline may be wind-driven or created by boat wakes. For more in-depth design criteria concerning these installations, see the U.S. Army Corps of Engineers Shore Protection Manual (59) or U.S.D.A. Natural Resources Conservation Service Technical Release # 69 Riprap for Slope Protection Against Wave Action.

Maintenance

Inspect periodically to determine if high flows have caused scour beneath the riprap or filter blanket or dislodged any of the riprap or filter blanket materials. Once a riprap installation has been completed, it should require very little maintenance. Periodic removal of woody vegetation may be required to insure the integrity of the riprap that will be impacted by growth of trees.

Appendix M. Gabions

Description

Gabions are flexible wire mesh baskets composed of rectangular cells filled with riprap or other selected (hard, durable) rock.

Specifications

Wire

- The wire mesh shall be made of galvanized steel wire having a minimum size of no less than No. 11 gage. A selvedge wire, running through the edges of the basket shall be made of galvanized steel wire having a minimum size of No. 9 gage. The lacing wire necessary for assembling and lacing the basket units and the connecting wires shall be made of galvanized steel wire having a minimum size of No. 13.5 gage. All wire shall be zinc coated with not less than 0.24 kg/m^2 of uncoated wire, and complying with FS QQ-W-461g, Class 3. The maximum dimension of the mesh opening shall not exceed 115 mm and the area of the mesh opening shall not exceed 9500 mm^2. The wire mesh shall be fabricated in such a manner as to be non-raveling.
- Wire for polyvinyl chloride coated gabions: The wire mesh shall have a galvanized steel wire core having a minimum size of no less than No. 12 gage.
- The selvedge wire shall have a steel wire core having a minimum size of no less than No. 10.5 gage. The lacing wire shall have a galvanized wire core having a minimum size of no less than No. 13.5 gage. The mass of the zinc coating for galvanized wire with extruded PVC coating shall be 0.24 kg/m^2 and shall comply with FS QQ-W-461g.
- The mass of the zinc coating per galvanized wire with bonded PVC coating shall be 0.03 kg/m^2.
- The minimum PVC coating thickness shall be 0.4 mm. The color of the polyvinyl chloride shall be black unless noted otherwise on the plans.

Dimensions

The baskets shall be constructed to the details shown on the plans or as directed. All baskets furnished by the manufacturer shall be of uniform width. All basket units shall be subdivided into equal compartments and separated by diaphragms of the same mesh and gage as the basket body. Each compartment length shall not exceed the compartment's width. The height of the gabion shall not exceed its width.

Fabrication

The baskets shall be fabricated in such a manner that the sides, ends, lid and diaphragms can be assembled at the construction site into rectangular baskets of the specified sizes. The baskets shall be of single unit construction. The front, base, back and lid shall be woven into a single unit. The ends shall be factory connected to the base section of the basket in such a manner that strength and flexibility at the point of connection is at least equal to tat of the mesh. All perimeter edges of the mesh forming the baskets shall be securely selvedged so that the joints obtained have at least the same strength as the wire mesh itself. Lacing wire shall be supplied in sufficient quantity for securely fastening all edges of the baskets and diaphragms and to provide for the necessary internal connecting wires in each cell. There shall be four cross connecting wires in

each cell whose height is 1/3 or 1/2 the width of the gabion and eight (8) connecting wires in each cell whose height equals the width of the gabion.

Tests

- Tensile strength of all wire used for manufacturing the baskets and lacing wire shall not be less than 400 MPa in accordance with FS QQW-461g, Class 3.
- Load and elongation tests shall be conducted in accordance with FS QQ-W-461g, Class 3.

Certification

- The Contractor shall furnish Certified Test Reports and/or Material Certificates with the requirements set forth in the specifications.
- The aggregate for this work shall conform to the requirements of Article M.12.02. Each side of the aggregate shall not be less than 100 mm and not more than 330 mm or 7/10 of the basket's smallest dimension, whichever is less. It shall be reasonably well graded between the limiting sizes.

Construction Methods

Each basket unit shall be assembled by binding together all vertical edges with lacing wire on 125 mm spacing or by a continuous piece of lacing wire looped around the vertical edges with a coil every 125 mm. Empty baskets shall be set to line and grade as shown on the plans. All adjoining empty basket units must be laced along the perimeter of their contact surfaces in the same manner as described previously for assembling. The empty upper baskets, that form the upper tier, shall also be laced to the top of the lower ones. A standard fence stretcher or other approved device shall be used to remove any kinks from the mesh and hold alignment of the units. The aggregate shall be carefully placed to assure alignment and avoid bulges with a minimum of voids. After the aggregate is placed to the level at which the connecting wires are to be installed, two connecting wires are placed perpendicular to each other, then looped and tied around two (2) meshes of each gabion wall. Filling is then resumed until the level of the next connecting wires or the top of the gabion is reached. After a gabion has been filled, the lid shall be stretched tightly over the filling until the lid meets the perimeter edges of the front and end panels. The lid shall then be tightly laced along all edges, ends and diaphragms in the same manner as described for assembling. Shop drawings detailing the layout of the gabions shall be furnished to the Department by the Contractor at least two weeks prior to their installation.

Notes on Application/Installation

Gabions are used where erosion potential is high. Therefore, construction must be sequenced so that the gabions are constructed before threatened areas are exposed to erosive forces.

Periodic inspection for signs of corrosion of wire, undercutting or excessive erosion at transition areas is essential and repair must be carried out promptly.

Figure M - 1 (NRCS)

Figure G-1 Gabion Use for Streambank Protection and Retaining Walls

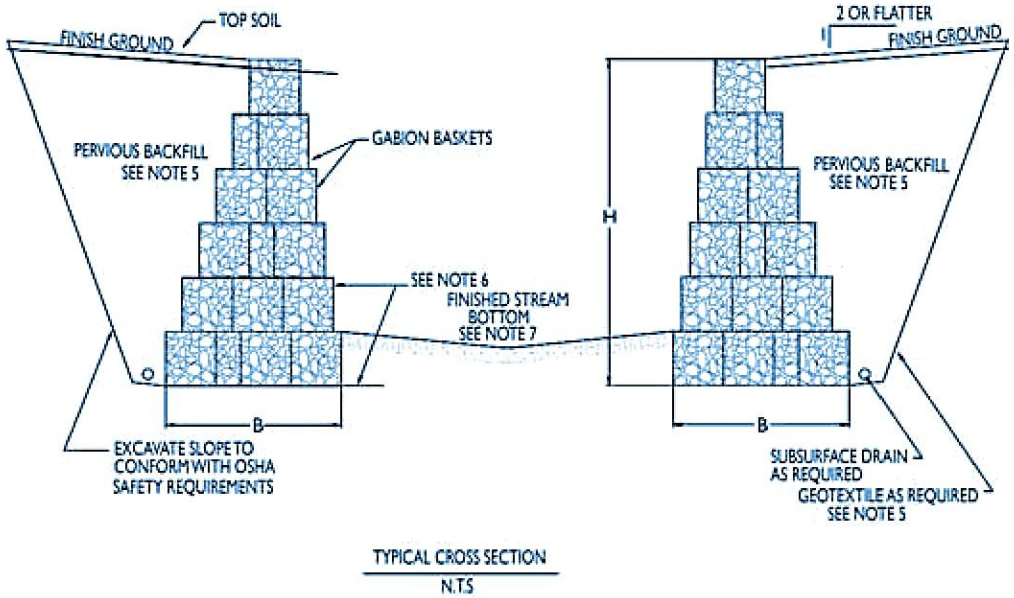

TYPICAL CROSS SECTION
N.T.S

NOTES:

1. SIZES OF INDIVIDUAL GABION BASKETS TO BE DETERMINED ON A CASE BY CASE BASIS.
2. 'H' AND 'B' DIMENSIONS INDIVIDUALLY DESIGNED BASED UPON EARTH AND HYDROSTATIC LOADINGS.
3. FOUNDATION BEARING CAPACITY TO BE CONFIRMED IN THE DESIGN PROCESS.
4. WIRE BASKETS SHALL CONFORM WITH CT DOT SPECIFICATIONS SECTION 7.04 OR USDA NRCS SPECIFICATION 64.
5. PROPERLY DESIGNED PERVIOUS BACKFILL AND GEOTEXTILE MAY BE REQUIRED TO RELIEVE HYDROSTATIC PRESSURES AND PREVENT PIPING OF FINE SOIL PARTICLES.
6. THE BOTTOM OF THE BASE BASKET SHALL BE AT LEAST THE DEPTH OF ANTICIPATED SCOUR. THE FACE OF BOTTOM BASKETS MAY REQUIRE GROUT OR GUNITE PROTECTION TO PREVENT ABRASION AND INCREASE GABION WIRE LONGEVITY.
7. STREAM BOTTOM MAY REQUIRE RIPRAP OR GABION MATTRESS FOR STABILITY.
8. PROVIDE SAFETY BARRIERS IF REQUIRED BY CODE.

Figure M - 2 (NRCS)

Figure G-2 Gabion Revetment

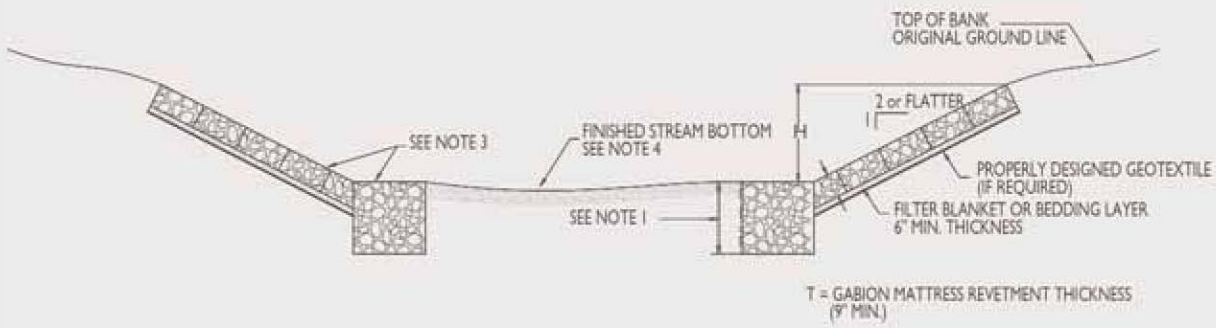

TYPICAL CROSS SECTION
N.T.S

NOTES:

1. SIZE OF ANCHOR OR TOE BASKET TO BE DETERMINED ON A CASE-BY-CASE BASIS. THE BOTTOM OF THE BASKET SHALL BE AT LEAST THE DEPTH OF ANTICIPATED SCOUR.
2. THE TOTAL HEIGHT OF GABION REVETMENT IS DEPENDENT UPON THE DESIGN FLOW DEPTH PLUS FREEBOARD.
3. FACE OF ANCHOR BASKET AND LOWER REVETMENT BASKETS MAY REQUIRE GROUT OR GUNITE PROTECTION TO PREVENT ABRASION AND INCREASE GABION WIRE LONGEVITY.
4. STREAM BOTTOM MAY REQUIRE RIPRAP OR GABION MATTRESS FOR STABILITY.
5. WIRE BASKETS SHALL CONFORM WITH CT DOT SPECIFICATIONS SECTION 7.04 OR USDA SPECIFICATION 64.

Appendix N. Erosion Control Blankets (ECBs)

SUMMARY

Definition

A manufactured blanket composed of biodegradable / photodegradable natural or polymer fibers and/or filaments that have been mechanically, structurally or chemically bound together to form a continuous matrix.

Purpose

To provide temporary surface protection to newly seeded and/or disturbed soils to absorb raindrop impact and to reduce sheet and rill erosion and to enhance the establishment of vegetation.

Applicability

- On disturbed soils where slopes are 2:1 or flatter.
- Where wind and traffic generated air flow may dislodge standard, unarmored mulches.
- May be used as a substitute for **Temporary Soil Protection**.
- May be used as a substitute for **Mulch for Seed.**

PLANNING CONSIDERATIONS

When considering the use of ECB, keep in mind the blanket's capability to conform to the ground surface irregularities. If the blanket is not capable of developing a continuous contact with the soil then it must be applied to a fine graded surface. Some blankets will soften and when wetted reconform to the ground. Also, when the ground is frozen, proper anchoring can be difficult, if not impossible.

Care must be taken to choose the type of blanket which is most appropriate for the specific need of the project. With the abundance of erosion control blankets available, it is impossible to cover all of the advantages, disadvantages and specifications of all manufactured blankets. There is no substitute for a thorough understanding of the manufacturer's instructions and recommendations in conjunction with a site visit by the erosion and sedimentation plan designer prior to and during installation to verify a product's appropriateness.

The success of temporary erosion control blankets is dependent upon strict adherence to the manufacturer's installation recommendations. As such, a final inspection should be planned to ensure that the lap joints are secure, all edges are properly anchored and all staking/stapling patterns follow the manufacturer's recommendations.

SPECIFICATIONS

Materials

Temporary erosion control blankets shall be composed of fibers and/or filaments that:

- are biodegradable or photodegradable within two years but without substantial degradation over the period of intended usage (five months maximum);

- are mechanically, structurally or chemically bound together to form a continuous matrix of even thickness and distribution that resist raindrop splash and when used with seedings allows vegetation to penetrate the blanket;
- are of sufficient structural strength to withstand stretching or movement by wind or water when installed in accordance with the manufacturer's recommendations;
- are free of any substance toxic to plant growth and unprotected human skin or which interferes with seed germination;
- contain no contaminants that pollute the air or waters of the State when properly applied; and
- provide either 80%-95% soil coverage when used as a substitute for Mulch for Seed or 100% initial soil coverage when used as a substitute for **Temporary Soil Protection** measure.

Materials shall be selected as appropriate for the specific site conditions in accordance with manufacturer's recommendations. Use of any particular temporary erosion control blanket should be supported by manufacturer's test data that confirms the blanket meets these material specifications and will provide the short term erosion control capabilities necessary for the specific project.

Site Preparation and Installation

(see **Figure ECB-1**) Prepare the surface, remove protruding objects and install temporary erosion control blankets in accordance with the manufacturer's recommendations. Ensure that the orientation and anchoring of the blanket is appropriate for the site.

The blanket can be laid over areas where sprigged grass seedlings have been inserted into the soil. Where landscape plantings are planned, lay the blanket first and then plant through the blanket in accordance with **Landscape Planting** measure.

Inspect the installation to insure that all lap joints are secure, all edges are properly anchored and all staking or stapling patterns follow manufacturer's recommendations.

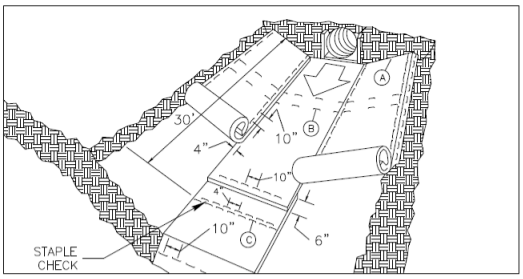

MATTING IN DITCHES

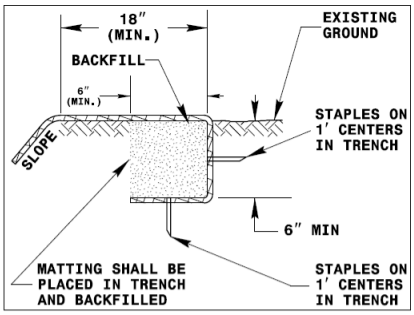

DIAGRAM A

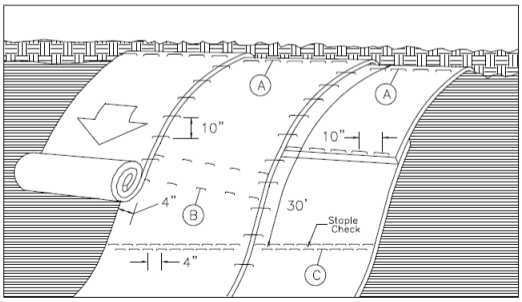

MATTING ON SLOPES

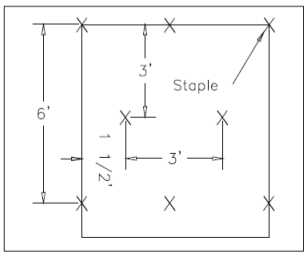

DIAGRAM B

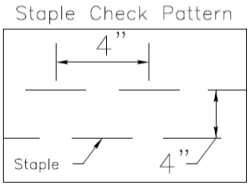

DIAGRAM C

NOTES:

THIS DETAIL APPLIES TO STRAW, EXCELSIOR, AND PERMANENT SOIL REINFORCEMENT MAT (PSRM) INSTALLATION.

STAPLES SHALL BE NO. 11 GAUGE STEEL WIRE FORMED INTO A "U" SHAPE WITH A MINIMUM THROAT WIDTH OF 1 INCH AND NOT LESS THAN 6 INCHES IN LENGTH.

MAINTENANCE

Inspect temporary erosion control blankets at least once a week and within 24 hours of the end of a storm with a rainfall amount of 0.5 inch or greater for failures. Blanket failure has occurred when (1) soils and/or seed have washed away from beneath the blanket and the soil surface can be expected to continue to erode at an accelerated rate, and/or (2) the blanket has become dislodged from the soil surface or is torn.

If washouts or breakouts occur, reinstall the blanket after regrading and reseeding, ensuring that blanket installation still meets design specifications. When repetitive failures occur at the same location, review conditions and limitations for use and determine if diversions, stone check dams or other measures are needed to reduce failure rate.

Repair any dislodged or failed blankets immediately.

When used as a substitute for Mulch for Seed, continue to inspect as required by the seeding measure. When used as a substitute for Temporary Soil Protection, continue to inspect until it is replaced by other erosion control measures or until work resumes.

Appendix O. Earth Fill

Description

Earthfill is composed of natural earth materials that can be placed and compacted by construction equipment operated in a conventional manner.

Earth backfill is composed of natural earth materials placed and compacted in confined spaces or adjacent to structures (including pipes) by means of hand tamping, manually directed power tampers or vibrating plates, or equivalent.

Specifications

All fill materials shall be obtained from required excavations and designated or approved borrow areas. The selection, blending, routing and disposition of materials in the various fills shall be as listed and described in the specifications and drawings and subject to approval by the Engineer.

Fill materials shall contain no sod, roots, frozen soil, snow or ice, or other perishable materials. Stones larger than 6 inches in diameter shall be removed prior to compaction of the fill.

The type of materials that are acceptable shall be as listed and described in the specifications and drawings.

Notes on Application/Installation

Foundation Preparation

Foundations for earthfill shall be stripped to remove vegetation and other unsuitable materials. Earth foundation surfaces shall be graded to remove surface irregularities and scarified to a depth of not less than two (2) inches.

Placement

- Fill shall not be placed upon a frozen surface, nor shall snow, ice or frozen material be incorporated in the fill.
- Adjacent to structures, fill shall be manually tamped in a manner which will prevent damage to the structures.
- Earthfill in dams, levees and other structures designed to restrain the movement of water shall be placed so as to meet the following additional requirements.
    - The distribution of materials throughout each zone shall be essentially uniform, and the fill shall be free from lenses, pockets, streaks or layers of material differing substantially in texture, moisture content or gradation from the surrounding material.
    - If the surface of any layer becomes too hard and smooth to achieve a suitable bond with the succeeding layer, it shall be scarified parallel to the axis of the fill to a depth of not less than two (2) inches before the next layer is placed.
    - The top surfaces of embankments shall be maintained approximately level during construction, except that a crown or cross-slope of approximately 2% shall be maintained to ensure effective drainage.
    - Dam embankments shall be constructed in continuous layers from abutment to abutment, except where openings to facilitate construction or to allow passage of stream flow during construction are specified.

Control of Moisture Content

- The fill material shall have a moisture content sufficient to secure compaction. When kneaded in the hand, it will form a ball which does not readily separate when struck

sharply with a pencil and will not extrude out of the hand when squeezed tightly.

- If the top surface of the preceding layer of compacted fill or a foundation or abutment surface in the zone of contact with the fill becomes too dry to permit suitable bond, it shall either be removed or scarified and wetted by sprinkling to an acceptable moisture content prior to placement of the next layer of fill.
- If the top surface of the preceding layer of compacted fill or a foundation or abutment surface in the zone of contact with the fill becomes too slick or saturated, it shall be allowed to dry and shall be thoroughly scarified to a depth of not less than two (2) inches before placing additional layers of fill.

Compaction

The methods of compaction listed below are intended to achieve at least 90 percent of the maximum density as determined by the Standard Proctor Test, ASTM D 698. All fill materials shall be placed and spread in layers not over nine (9) inches thick before compaction. Fill materials adjacent to structures shall be placed and spread in layers not over four (4) inches thick before compaction. Each layer shall be compacted by traversing the entire surface using one of the following methods:

- Tamping (Sheepsfoot) Roller - Minimum of three (3) passes with contact pressure of at least 100 pounds per square inch (psi), towed at speeds not exceeding five (5) miles per hour (mph).
- Pneumatic (Rubber Tire) Roller - Minimum of three (3) passes with a wheel load of at least 18,000 pounds and a tire pressure of 80 psi, towed at speeds not exceeding five (5) mph.
- Loaded Earth Moving Equipment - Minimum of three (3) passes with a wheel load of at least 10 psi, towed at speeds not exceeding five (5) mph. The following limitation applies to this method: Fill height shall be less than 15 feet.
- Track Type Tractor (Crawler, Bulldozer) - Minimum of three (3) passes with a track type tractor exerting a pressure of not less than 8 psi. Tractor speeds shall not exceed five (5) mph during compaction process. The following limitations apply to this method:
    - Maximum loose lift thickness of 6 inches. Stones larger than three (3) inches in diameter shall be removed prior to compaction.
    - Fill height shall be less than eight (8) feet.
    - Fill shall not have permanent water stored against it.