STATE OF RHODE ISLAND AND PROVIDENCE PLANTATIONS
DEPARTMENT OF ENVIRONMENTAL MANAGEMENT
Office of Water Resources

Rules Establishing Minimum Standards Relating to

Location, Design, Construction and Maintenance of Onsite Wastewater

Treatment Systems

November 25, 2018

AUTHORITY: These rules are adopted in accordance with Part 6, Subchapter 10 pursuant to Chapter 150 Title 250 of the Rhode Island General Laws of 1956, as amended.

Table of Contents

6.2 Authority 1

6.3 Liberal Application 1

6.4 Severability 1

6.5 Applicability 1

6.6 Administrative Findings 2

6.7 Incorporated Materials 3

6.8 Definitions 4

6.9 Prohibitions 11

6.10 Class I, II, III, and IV Licenses 12

6.11 Obtaining a Class I, II, III or IV License 13

6.12 Expiration and Renewal of a Class I, II, III or IV License 16

6.13 Disciplinary Action for Class I, II, III and IV Licensees 16

6.14 Installer's License 18

6.15 Onsite Wastewater Treatment Systems - General 20

6.16 Soil Evaluation 21

6.17 Additional Site Testing 26

6.18 OWTS Applications 27

6.19 Required Content of OWTS Submissions 32

6.20 Applications Involving the DEM Freshwater Wetlands Program and the Coastal Resources Management Council 35

6.21 Subdivisions 36

6.22 Wastewater Flow 39

6.23 Minimum Setback Distances 46

6.24 Subsurface Drains 52

6.25 Building Sewers 52

6.26 Grease Tanks 53

6.27 Septic Tanks 54

6.28 Septic Tank Effluent Pipe 57

6.29 Holding Tanks 57
6.30 Pump Tanks 58
6.31 Pumps 59
6.32 Distribution Boxes 60
6.33 Leachfields 61
6.34 Dispersal Trenches 65
6.35 Concrete Chambers 68
6.36 Pressurized Drainfields 71
6.37 Advanced Pressure Drainfields (APDs) 75
6.38 Low Pressure Pipe (LPP) 81
6.39 Large OWTS Requirements 82
6.40 Alternative Toilets 84
6.41 Alternative or Experimental Technology Approval 85
6.42 Critical Resource Areas - General 90
6.43 Requirements in the Salt Pond and Narrow River Critical Resource Areas 91
6.44 Requirements in Drinking Water Supply Watershed Critical Resource Areas 92
6.45 Nitrogen Loading in Areas of Onsite Drinking Water Wells 92
6.46 Permit Expiration 93
6.47 OWTS Installation 95
6.48 Certificate of Construction 97
6.49 Certificate of Conformance 98
6.50 Permit Suspensions and Revocations 98
6.51 Variance Requests 99
6.52 Variance Review Process 101
6.53 Appeals 103
6.54 Fees 104
6.55 Operation and Maintenance 109
6.56 Removal and Abandonment 109

6.57 Cesspool Phase Out 109

6.58 Guidance Documents 111

6.59 Figure 1: Leachfield Over Restrictive Layer or Bedrock 112

6.60 Figure 2: Minimum Setback Distances in Drinking Water Supply Watershed Critical Resource Areas 113

6.61 Figure 3: Minimum Setback Distances in the Salt Pond and Narrow River Critical Resource Areas 114

6.62 Figure 4: Grease Tanks 115

6.63 Figure 5: Septic Tanks 116

6.64 Figure 6: Septic Tank Riser Detail 117

6.65 Figure 7: Leachfield Construction, Invert of Distribution Lines Below Original Grade 118

6.66 Figure 8: Leachfield Construction, Invert of Distribution Lines Above Original Grade 119

6.67 Figure 9: Leachfield Construction on Sloping Sites 120

6.68 Figure 10: Shallow Concrete Chambers 121

6.69 Figure 11: Category 1 Technology and Pressurized Drainfield Schematic 122

6.70 Figure 12: Category 2 Technology and Pressurized Drainfield Schematic 122

6.71 Figure 13: Demand Dosing Tank with Centrifugal Pump 123

6.72 Figure 14: Demand Dosing Tank With Multi-stage Centrifugal Pump 123

6.73 Figure 15: Timed-dosing Tank With Centrifugal Pump and In-line Screen 124

6.74 Figure 16: Timed-dosing Tank With Centrifugal Pump and Basket Screen 124

6.75 Figure 17: Timed-dosing Tank With Screened Vault and Multi-stage Centrifugal Pump 125

6.76 Figure 18: Above-ground Bottomless Sand Filter (Side View) 125

6.77 Figure 19: In-ground Bottomless Sand Filter (Side View) 126

6.78 Figure 20: Typical Bottomless Sand Filter (Top View) 126

6.79 Figure 21: Side View Detail- Typical Bottomless Sand Filter 126

6.80 Figure 22: Orifice Shield Detail: Note: Shields shall be able to drain. Details vary from manufacturer. 127

6.81 Figure 23: BSF Flushing Valve Choice Detail 127

6.82 Figure 24: PSND Cross Section Details 127

6.83 Figure 25: PSND Cross Section Detail (Long Side) 128

6.84 Figure 26: LPP Details for Regular Trenches (Top and Isometric Views) 129

6.85 Figure 27: LPP Details for Shallow Concrete Chambers (Top and Isometric Views) 129

6.86 Figure 28: South Shore Salt Ponds Critical Resource Area..... 130

6.87 Figure 29: Narrow River Critical Resource Area 131

6.88 Figure 30: Providence Water Supply Board Drinking Water Supply Watershed..... 132

6.89 Figure 31: Cumberland, Pawtucket Water Supply Board and Woonsocket Drinking Water Supply Watersheds 133

6.90 Figure 32: Newport, New Shoreham and Stone Bridge Fire District Drinking Water Supply Watersheds 134

6.91 Figure 33: Eleanor Slater/Zambarano Unit, Bristol County Water Authority, Yawgoog Scout Reservation, and Jamestown Drinking Water Supply……...……..135

250-RICR-150-10-6

TITLE 250 – DEPARTMENT OF ENVIRONMENTAL MANAGEMENT

CHAPTER 150 – WATER RESOURCES

SUBCHAPTER 10 - WASTEWATER & STORMWATER

PART 6 – Rules Establishing Minimum Standards Relating to Location, Design, Construction and Maintenance of Onsite Wastewater Treatment Systems

6.1 Purpose

The purpose of these rules is to protect public health and the environment by establishing minimum standards for the proper location, design, construction and maintenance of onsite wastewater treatment systems (OWTSs) used for the treatment and dispersal of wastewater.

6.2 Authority

These rules are promulgated pursuant to R.I. Gen. Laws Chapter 42-17.1 Environmental Management; Chapter 5-56 Installers of Individual Sewage Disposal Systems; Chapter 5-56.1 Designers of Individual Sewage Disposal Systems; Chapter 23-19.5 Percolation Tests and Water Table Elevations; Chapter 23-24.3 Substances or Compounds Used as Sewerage System Cleaners; Chapter 46-13.2 Drilling of Drinking Water Wells, and Chapter 23-19.15 Rhode Island Cesspool Act of 2007; in accordance with Chapter 42-35 Administrative Procedures.

6.3 Liberal Application

The terms and provisions of these rules shall be liberally construed to allow the Department to effectuate the purposes of state laws, goals, and policies.

6.4 Severability

If any provision of these rules, or application thereof to any person or circumstances, is held invalid by a court of competent jurisdiction, the validity of the remainder of the rules shall not be affected thereby.

6.5 Applicability

A. These rules apply to the discharge of wastewater to an OWTS. Other wastewater that does not meet the definition in § 6.8 of this Part discharged to the subsurface must be done in accordance with Subchapter 05-4 of this Title. Where an OWTS is approved for discharge of wastewater from commercial or industrial uses, the Director may require the applicant to obtain an approval from the Groundwater Discharge Program if, in the opinion of the Director, there is a reasonable risk that materials used in commercial or industrial processing may be discharged to the system.

B. These rules provide minimum requirements for the design of an OWTS and its components. In addition, the rules provide for the approval of alternative or experimental technologies (§ 6.41 of this Part) that may be used in conjunction with, or as an alternative to, the OWTSs and components specified herein.

C. No provision of these rules nor permit granted hereunder shall be construed to prevent enforcement of any other state, federal or local laws and regulations duly adopted for the purpose of protecting the public health or environmental quality.

D. Nothing in these rules shall affect the Director's power and duty to issue an immediate compliance order or take any other action pursuant to the R.I. Gen. Laws.

E. These rules shall apply to all applications submitted to the Department after the effective date of these rules. Applications submitted to the Department prior to the effective date of these rules shall be governed by the rules in effect at that time.

6.6 Administrative Findings

A. OWTSs are an integral part of our total wastewater infrastructure representing the decentralized systems on the Rhode Island landscape. The people of the State should be assured that adequate OWTSs have been and are being provided and maintained for all dwellings and buildings not served by public wastewater systems.

B. OWTSs must be viewed as wastewater treatment and dispersal systems, not merely as disposal systems. OWTSs must be located, designed, constructed, operated, and maintained in a manner to produce an effluent that, when released into the environment, will not cause adverse public health or environmental impacts.

C. The improper location, design, construction, operation and maintenance of OWTSs may have the following harmful effects:

1. Public health may be imperiled by diseases and other health hazards relating to inadequately treated wastewater;

2. The public health and interest may be harmed by contamination of groundwater resources that are now used or which may be used in the future as sources of public or private drinking water supply;

3. The public health and interest may be harmed by contamination of public or private drinking water wells and other water supplies or tributaries thereto;

4. Freshwater and coastal waters of the State may be imperiled by high nutrient and bacteriological contamination;

5. The people of the State may be inconvenienced or harmed by nuisance conditions such as odors and OWTS overflows; and

6. The public use and enjoyment of the water resources of the State for recreational endeavors may be disrupted or imperiled by contamination of those resources.

D. The science and technology for onsite wastewater treatment and disposal is rapidly advancing, necessitating that licensed professionals and the Department continue to evaluate and share information and knowledge in order to more effectively protect the public health and the environment.

E. Properly functioning OWTS, other than those employing nitrogen reducing technologies, remove only a small percent of nitrogen in the wastewater. Excess nitrogen is a contaminant in drinking water. Excess nitrogen in estuarine environments causes eutrophication, which results in depleted dissolved oxygen conditions and habitat loss.

F. Phosphorus in OWTS wastewater is a contaminant that can cause eutrophication in fresh water environments, which results in habitat loss.

G. Cesspools are not an approved method of wastewater disposal under these rules, and all existing cesspools are considered to be substandard.

1. There exists a need to abate pollution and threats to public health caused by cesspools;

2. Cesspools contribute directly to groundwater and surface water contamination and environmental impacts will be exacerbated by increased precipitation, storm frequency, and sea level rise;

3. Wastewater disposed from cesspools can pose significant health threats to people who come into contact with, or consume, contaminated surface waters or groundwaters;

4. Appropriate treatment of wastewater disposed into the ground is essential to the protection of public health and the environment, particularly in relation to Narragansett Bay and the rest of the State's coastal region, and public drinking water resources;

5. Replacement of cesspools with modern OWTS technology reduces risks to public health and the environment;

6. In areas served by public wastewater systems, connection to said system offers a readily available, low-cost means of mitigating problems and threats caused by cesspools; and

7. A fund exists to assist homeowners with the costs of removing cesspools and inadequate septic systems and replacing them with an approved OWTS if the community in which the homeowner resides has created a wastewater management district in accordance with R.I. Gen. Laws Chapter 24.5 of Title 45.

H. OWTSs must be properly maintained to prevent their malfunction or failure in order to help avoid both contamination of State waters and the associated risks to the public health and to help preserve natural ecosystems.

I. Prior to January 1, 2008, the Department used the term “Individual Sewage Disposal Systems,” or ISDS, in these rules when referring to onsite wastewater treatment systems. The term “Onsite Wastewater Treatment Systems,” or OWTS, has been used since January 1, 2008, and is synonymous with ISDS.

6.7 Incorporated Materials

A. These regulations hereby adopt and incorporate the ASTM International “Standard Specification for Precast Concrete Septic Tanks C-1227-10a” (2010) by reference, not including any further editions or amendments thereof and only to the extent that the provisions therein are not inconsistent with these regulations.

B. These regulations hereby adopt and incorporate the International Association of Plumbing and Mechanical Officials “American National Standard for Prefabricated Septic Tanks IAPMO/ANSI Z1000-2007” (2007) by reference, not including any further editions or amendments thereof and only to the extent that the provisions therein are not inconsistent with these regulations.

C. These regulations hereby adopt and incorporate the NSF International/American National Standards Institute Standard 41 "Non-liquid Saturated Treatment Systems" (2005) by reference, not including any further editions or amendments thereof and only to the extent that the provisions therein are not inconsistent with these regulations.

D. These regulations hereby adopt and incorporate the NSF International/American National Standards Institute Standard 245 "Nitrogen Reduction Wastewater Treatment Systems" (2010) by reference, not including any further editions or amendments thereof and only to the extent that the provisions therein are not inconsistent with these regulations.

E. These regulations hereby adopt and incorporate 40 C.F.R. §§ 9, 144, 145, and 146 (1999) by reference, not including any further editions or amendments thereof and only to the extent that the provisions therein are not inconsistent with these regulations.

F. These regulations hereby adopt and incorporate the National Electrical Manufacturers Association Standard 250-2014 "Enclosures for Electrical Equipment (1000 Volts Maximum)" (2014) by reference, not including any further editions or amendments thereof and only to the extent that the provisions therein are not inconsistent with these regulations.

G. These regulations hereby adopt and incorporate the ASTM International "Standard Specification for Concrete Aggregates C33/C33M-16e1)" (2016) by reference, not including any further editions or amendments thereof and only to the extent that the provisions therein are not inconsistent with these regulations.

6.8 Definitions

A. As used in these rules, the following terms shall, where the context permits, be construed as follows:

1. "Advanced treatment unit" means an alternative and experimental treatment system that has been approved to reduce the BOD5 and TSS to 30/30 mg/L or less.

2. "Alternative OWTS component" means any part of an OWTS that does not meet the design or construction requirements as provided by these rules, but has been demonstrated through field testing, calculations and other engineering evaluations to be equal to, or provide the equivalent performance of any part of an OWTS within these rules or to enhance or facilitate treatment, maintenance, longevity or efficiency of an OWTS, and for which a certification from DEM has been issued.

3. "Alternative technology" means any OWTS technology for which design parameters are not specified in these rules, but has been demonstrated through field testing, calculations and other engineering evaluations to comply with performance standards consistent with these rules, and for which a certification from DEM has been issued.

4. "APD" means advanced pressure drainfield.

5. "Applicant" means the owner or owners of the property or easement that is the subject of the application, or it must be the person who holds a valid purchase and sales agreement for said property.

6. "Area subject to storm flowage" means drainage swales and channels which lead into, out of, pass through, or connect other watercourses, and which carry flows resulting from storm events but may remain relatively dry at other times.

7. "ASTM" means ASTM International, formerly known as the American Society for Testing and Materials.

8. "Basal area" means the horizontal surface in an APD or LPP designed to receive effluent.

9. "Bedrock" means rock, commonly called ledge, that forms the earth's crust. Bedrock includes rotten rock.

10. "Bedroom" means any room in a residential structure which is greater than seventy (70) square feet in area, which is susceptible to present or future use as a private sleeping area and which satisfies all of the following requirements:

    a. Has at least one (1) window that meets the four point four (4.4) square foot minimum size and all other requirements of the "Rhode Island State Building Code SBC-1 or SBC-2";

    b. Has at least one (1) interior method of entry and egress, excluding closets and bathrooms, allowing the room to be closed off from the remainder of the residence for privacy; and

    c. Is a heated living space that is unrestricted for year-round use. Rooms located below grade that are not recognized as bedrooms by the "Rhode Island State Building Code SBC-1 or SBC-2" are not recognized as bedrooms under these rules.

11. "Blackwater" means liquid and solid human body waste and the carriage waters generated through toilet usage.

12. "BOD5" means biochemical oxygen demand - five day. BOD5 is determined by a five day laboratory test which determines the amount of dissolved oxygen used by microorganisms in the biochemical oxidation (breakdown) of organic matter. BOD5 concentrations are used as a measure of the strength of a wastewater.

13. "BSF" means bottomless sand filter. A BSF is a timed-dosed sand filter used specifically as a dispersal / drainfield option for pretreated effluent which at least meets the BOD5 and TSS requirements of thirty (30) mg/l, and FOG of five (5) mg/l. The filter is intermittently pressure dosed with the effluent followed by periods of drying and oxygenation of the filter bed. Wastewater applied to the surface of a bottomless sand filter flows through that filter media once before infiltrating to the underlying native soils.

14. “Building sewer” means the pipe that begins outside the building foundation wall and extends to the septic tank, the pipe that begins outside the building foundation wall and extends to the grease tank, the pipe from a grease tank to a septic tank, or the pipe carrying laundry wastes directly to a leachfield.

15. “Cesspool” means any buried chamber, including, but not limited to, any perforated metal tank, perforated concrete vault or covered hollow or excavation, which receives discharges of wastewater from a building sewer for the purpose of collecting solids and discharging liquids to the surrounding soil.

16. “Change of use” means any change in use or occupancy of any structure or part thereof which would violate any provision of the Rhode Island State Building Code, R.I. Gen. Laws Chapter 23-27.3, or any regulation promulgated thereto without first obtaining a certificate of occupancy indicating that the structure complies with the provisions of the State building code for the proposed new use. Change of use shall also be held to mean a conversion of a seasonally used structure to a structure for year-round use.

17. “Coastal shoreline feature” means a part of the shore as categorized by the State of Rhode Island Coastal Resources Management Program using the following categories: coastal beaches; barrier islands and spits; coastal wetlands; coastal headlands, bluffs and cliffs; rocky shores; manmade shorelines; and dunes.

18. “Compost toilet” means any self-contained toilet from which no liquid or solid waste materials are regularly discharged and from which a humus-like end product is produced.

19. “Department” or “DEM” means the Rhode Island Department of Environmental Management.

20. “Director” means the Director of the Rhode Island Department of Environmental Management or any subordinate(s) to whom the Director has delegated the powers and duties vested in him/her pursuant to R.I. Gen. Laws Chapters 46-12 and 42-17.1, or any other duly authorized Agent.

21. “Dispersal trench” means a shallow ditch with vertical sides, filled with stone, in which a single perforated distribution line or other suitable distribution device is laid and over which a cover of earth is placed.

22. “Distribution box” means a watertight compartment that receives effluent and distributes it in approximately equal portions to two (2) or more distribution lines leading to some type of leachfield.

23. "Distribution laterals" (pressure dosed) means usually small diameter PVC pipe with orifices evenly spaced, used to uniformly distribute wastewater over a treatment zone in an enclosed component or drainfield.

24. “Distribution line” means the imperforated and perforated pipe or other suitable distribution device used to disperse effluent that extends from the distribution box.

25. “Dosing” means the pumped or regulated flow of wastewater.

26. "Dosing tank" means a tank that collects wastewater and from which wastewater is discharged it into another treatment or dispersal step; equivalent to a dosing chamber.

27. "Drainfield" means a soil treatment area.

28. "Effluent" means liquid that is discharged from a septic tank, filter, or other onsite wastewater system component.

29. “Experimental technology” means any OWTS technology that does not meet the location, design or construction requirements as provided by these rules, but has been demonstrated in theory to meet the requirements of these rules and may not be in use in Rhode Island or elsewhere as an approved technology for wastewater treatment.

30. “Failed OWTS” means any OWTS that does not adequately treat and disperse wastewater so as to create a public or private nuisance or threat to public health or environmental quality, as evidenced by, but not limited to, one or more of the following conditions:

    a. Failure to accept wastewater into the building sewer;

    b. Discharge of wastewater to a basement; subsurface drain; stormwater collection, conveyance, or treatment device; or watercourse unless expressly permitted by the Department;

    c. Wastewater rising to the surface of the ground over or near any part of OWTS or seeping from the absorption area at any change in grade, bank or road cut;

    d. The top of the inlet or the top of the outlet for a septic tank, distribution box, or pump tank is submerged;

    e. The liquid depth in a cesspool is less than six (6) inches from the inlet pipe invert;

    f. Pumping of the cesspool or septic tank is required more than two (2) times per year;

    g. OWTS is shown to have contaminated a drinking water well or watercourse;

    h. If a septic tank, pump tank, distribution box, or cesspool is pumped and groundwater seeps into it;

    i. Any deterioration, damage, or malfunction relating to any OWTS that would preclude adequate treatment and dispersal of wastewater; or

    j. Excessive solids are evident in the distribution box or distribution lines.

31. "Filter" means a device or structure for removing suspended solid, colloidal material, or BOD5 from wastewater.

32. "Filter fabric" means any man-made permeable textile material used with foundations, soil, rock, or earth.

33. "Filter media" means the material through which wastewater is passed for the purpose of treatment.

34. “Financial surety” means a general obligation bond, revenue bond, performance bond, or any other type of financial guaranty, in fully marketable form, as evidence to the commitment of the construction of a public wastewater project.

35. “Floodplain” means that land area adjacent to a river or stream or other body of flowing water which is, on the average, likely to be covered with flood waters resulting from a one hundred (100) year frequency storm. A one hundred (100) year frequency storm is one that is to be expected to be equaled or exceeded

once in one hundred (100) years; or may be said to have a one percent (1%) probability of being equaled or exceeded in any given year. Rainfall intensity data for a one hundred (100) year frequency storm are those established for New England locations by the National Weather Service.

36. "FOG" means fats, oils, and grease contained in wastewater.

37. “Foundation drain” means any mechanical or gravity drainage system, including all porous media installed to facilitate drainage, that lowers the groundwater elevation beneath a building foundation and which has an outlet for the collected groundwater.

38. “Freshwater wetland” is defined as set forth in R.I. Gen. Laws § 2-1-20(8), and as further defined by the Department's "Rules and Regulations Governing the Administration and Enforcement of the Fresh Water Wetlands Act." The term shall further be held to include those wetland types defined by the remainder of R.I. Gen. Laws § 2-1-20 and the wetland regulations, including, but not limited to: marshes, swamps, bogs, ponds, rivers, river and stream floodplains and banks, areas subject to flooding or stream water, including rivers and streams, and that area of land within fifty (50) feet of the edge of any bog, marsh, swamp or pond or that area within one hundred (100) feet of a flowing body of water less than ten (10) feet wide or that area within two hundred (200) feet of a flowing body of water greater than ten (10) feet in width.

39. “Graywater” means wastewater drained from sinks, tubs, showers, dishwashers, clothes washers, and other non-toilet sources.

40. “Groundwater table” means the upper surface of the zone of saturation in an unconfined aquifer; includes a perched groundwater table.

41. “Holding tank” means a closed watertight structure used to contain wastewater prior to being removed from the premises. A holding tank does not discharge wastewater to the surface of the ground or to the subsurface.

42. “Human transported material” means any materials, other than those emplaced pursuant to these rules, including but not limited to artifacts, organic materials, soil, rock, or sediment moved horizontally by directed human activity.

43. "Influent" means wastewater being applied to a treatment unit or to a drainfield.

44. “Invert” means the lowest portion of the interior of a pipe or fitting.

45. “Large onsite wastewater treatment system” means an OWTS that meets any of the following:

    a. Any single OWTS designed to treat five thousand (5,000) gallons or more per day;

    b. Multiple OWTSs for any project on one or more parcels of land, excluding residential subdivisions, where the total design flow for the project is five thousand (5,000) gallons or more per day;

    c. All OWTSs serving more than one (1) unit in a residential subdivision, provided that the total design flow of these OWTSs, each serving more than one unit, is five thousand (5,000) gallons or more per day; or

    d. Proposed OWTSs and existing OWTSs on the parcel that will result in a total design flow for the parcel exceeding five thousand (5,000) gallons per day.

46. “Large capacity cesspool” means a cesspool that serves any non-residential facility that has the capacity to serve more than twenty (20) people per day or serves any multi-family residence or apartment building.

47. “Leachfield” means a group of one (1) or more dispersal chambers or trenches designed for the final treatment and dispersal of wastewater into the underlying soil. The leachfield shall be held to mean the horizontal and vertical lines circumscribing the outermost edges including the area between the chambers or trenches and the depth to the bottom of stone.

48. “Linear loading rate” means the loading rate per linear foot of leachfield (gallons per day per linear foot) along the land’s contour.

49. "LPP" means low pressure pipe:

    a. Application of effluent over an infiltrative surface via pressurized orifices and associated devices and parts (including pump, filters, controls, and piping).

    b. Distribution via a network of small diameter laterals with small orifices installed in a soil treatment area; also called low- pressure-pipe (LPP) distribution.

50. “Maintenance” means the regular cleaning of any concrete chamber, cesspool, septic tank, building sewer, distribution lines or any other component of an OWTS for the purpose of removing accumulated liquid, scum or sludge. The term, "maintenance," shall also be held to include regularly required servicing or replacement of any related mechanical, electrical, or other component equipment.

51. “Nitrogen reducing technology” means a wastewater treatment technology that is accepted by the Department as capable of reducing the total nitrogen concentrations by at least fifty percent (50%) and meeting an effluent concentration of less than or equal to nineteen (19) mg/l.

52. "O&M service provider" means a professional who performs operation and maintenance on a wastewater treatment system.

53. “Onsite wastewater treatment system" or "OWTS” means any system of piping, tanks, dispersal areas, alternative toilets or other facilities designed to function as a unit to convey, store, treat or disperse wastewater by means other than discharge into a public wastewater system.

54. “Original ground” means those soils that have been deposited or developed by natural processes, excluding storm deposited sand in the backdune environment.

55. “Owner” means any person who holds legal title to any real property; or has possession or control of any real property through any agent, executor, executrix, administrator, administratrix, trustee or guardian of the estate of a holder of a legal title. Each such person is bound to comply with the provisions of these rules.

56. "Particle size" means the diameter (in millimeters) of a soil or sand particle, usually measured by sedimentation or sieving methods.

57. “Person” means any individual, group of individuals, firm, corporation, association, partnership or any federal, state or municipal governmental entity.

58. “Private drinking water well” means any manmade opening into the ground developed for the purpose of meeting a person's current potable drinking water needs provided said well does not supply a public water system. This definition shall include proposed private drinking water wells on an applicant’s property and on other properties with an approved OWTS permit. Wells serving non-potable or non-drinking water needs are not considered private drinking water wells under these rules. A well on a property that is connected to a public water system is not considered a private drinking water well under these rules.

59. “Probe” means any exploratory test employing a driving rod, tool or other device to establish the depth of bedrock.

60. "PSND" means pressurized shallow narrow drainfield.

61. “Public drinking water supply well” or “public well” means any manmade opening into the ground developed for the purpose of meeting all or part of a public water system needs.

62. “Public water system” means any water system that provides piped water to the public for human consumption, provided that such system has at least fifteen (15) service connections or serves an average of twenty-five (25) individuals daily at least sixty (60) days out of the year. A public water system shall include all sources and facilities involved in collecting, treating, storing and distributing the water.

63. “Pump tank” means a watertight structure equipped with one (1) or more pumps designed to discharge wastewater intermittently into a leachfield.

64. “Residence” means any structure used for housing purposes, including, but not limited to, single or multiple family dwellings, duplexes, tenements, apartment buildings, residential condominiums, mobile homes, recreational vehicles or trailers.

65. “Restrictive layer” means a soil horizon that is assigned to a soil category 10 as defined in § 6.16(L) of this Part.

66. “Rotten rock” means any decomposed but still coherent rock. Rotten rock is greater than fifty percent (50%) coherent rock and lies above equal or more coherent rock.

67. “Seasonal high groundwater table” means the elevation of the groundwater table during that time of the year at which it is highest as determined in accordance with § 6.16(M) of this Part.

68. “Septage” means any solid, liquid or semi-solid removed from septic tanks, cesspools, privies, wastewater holding tanks or other similar onsite wastewater treatment systems.

69. “Septic tank” means a watertight receptacle which receives the discharge of wastewater from a building sewer, and is designed and constructed to permit the deposition of settled solids, the digestion of the matter deposited, and the discharge of the liquid portion into the next treatment component or distribution box.

70. “Septic tank effluent pipe” means the pipe that begins at the outlet of the septic tank or other treatment tank and extends to the next treatment component or distribution box.

71. “Single-service articles” means tableware, carry-out utensils, and other items such as bags, containers, placemats, stirrers, straws, toothpicks, and wrappers that are designed and constructed for use one time by one individual.

72. "Soil texture" means the relative proportions of soil separates (sand, silt, and clay particles) in a particular soil. (USDA soil texture abbreviations illustrated in § 6.37(B)(4) of this Part are defined as: cos= coarse sand; fs = fine sand; lfs = loamy fine sand; ls = loamy sand; fsl = fine sandy loam; sl = sandy loam; l= loam; vfs = very fine sand; lvfs = loamy very fine sand; vfsl = very fine sandy loam; sil = silt loam; vfsl = very fine sandy loam; si = silt; sicl = silty clay loam.)

73. “Storm drain” means any pipe or structure designed to collect, carry and divert surface water runoff.

74. “Structure” means any residence (as defined herein), building, garage, shack, trailer or other permanent or semi-permanent facility, whether commercial or non-commercial in use, which is proposed to be placed or has been built or otherwise placed on a parcel of real property.

75. “Subdivision” means the division or re-division of a lot, tract, or parcel of land into two (2) or more lots, tracts, or parcels. For the purpose of these rules, subdivisions will also include two (2) or more contiguous

lots of record under common ownership when located on a public right of way or roadway, including paper streets, or where property line changes are proposed.

76. “Subdivision layout” means any proposed design or arrangement of lots, roads, structures, easements, utilities or other features to be incorporated into a subdivision.

77. “Substantial improvement” means any construction, renovation, or improvements made within any twelve (12) month period and costing in excess of fifty percent (50%) of the physical value of the building prior to the start of construction.

78. “Subsurface drains” means any system of below surface piping or highly permeable material intended to lower the groundwater table of an area, and which has an outlet to the surface for the collected groundwater.

79. “System inspector” means a person on a DEM-approved list (can be found at the following address: http://www.dem.ri.gov/programs/benviron/water/licenses/isds/pdfs/deslist.pdf) with the minimum qualifications of holding a Class I, II, or III Designers License or being a Registered System Inspector with the New England Onsite Wastewater Training Center.

80. “Test hole” means any excavation in the area of the proposed leachfield to collect information on the soil profile, depth to a restrictive layer or bedrock, depth to seasonal high groundwater table or any other applicable field information.

81. “Transfer” means a transfer of real property except between the following relationships:

    a. Between current spouses;

    b. Between parents and their children;

    c. Between full siblings; or

    d. Where the grantor transfers the real property to be held in a revocable or irrevocable trust, where at least one of the designated beneficiaries is of the first degree of relationship to the grantor.

82. “Tributary” means any flowing body of water or watercourse that provides intermittent or perennial flow to down-gradient watercourses that eventually discharge to the waters of concern (e.g., reservoir impoundment or salt pond).

83. “Tributary wetland” means freshwater wetlands within a watershed that are connected via a watercourse to the waters of concern (e.g., drinking water supply impoundment or coastal wetland or tidal waters).

84. "TSS" means total suspended solids. The measure of solids that either float on the surface of, or are in suspension in, water or wastewater. A measure of wastewater strength, often used in conjunction with BOD5.

85. "U.C." means uniformity coefficient, a numeric quantity which is calculated by dividing the size of a sieve opening which will pass 60% by weight of a sand media sample by the size of the sieve opening which will pass 10% by weight of the same sand media sample. Note that 50% of the sample is retained between the two. The uniformity coefficient is a measure of the degree of size uniformity of the sand particles in a sand media sample. As the U.C. value approaches one (1), the more uniform in particle size the sand media is. The larger the U.C., the less uniform the particle size.

$$UC = \frac{\text{Particle Diameter}_{60\%}}{\text{Particle Diameter}_{10\%}} = \frac{D_{60}}{D_{10}}$$

86. “Vendor” means the person seeking an alternative or experimental technology approval.

87. “Wastewater” means human or animal excremental liquid or substance, putrescible animal or vegetable matter or garbage and filth, including, but not limited to, water discharged from toilets, bath tubs, showers, laundry tubs, washing machines, sinks, and dishwashers. Both blackwater and graywater are considered wastewater under these rules.

88. “Watercourse” means any river, stream, brook, pond, lake, swamp, marsh, bog, fen, wet meadow, area subject to storm flowage, or any other standing or flowing body of water, including such watercourses that may be affected by the tides.

89. “Wellhead protection area” means the area as designated by the Director in the DEM “Groundwater Quality Rules” surrounding a public well or wellfield through which water will move toward and reach such well or wellfield.

6.9 Prohibitions

A. No individual shall prepare plans, applications, certifications or specifications for the design of an OWTS that is to be submitted to the Department pursuant to these rules, unless such individual has a valid license in accordance with the provisions of these rules to conduct such activity.

B. No individual shall install, construct, alter, or repair an OWTS pursuant to these rules unless such individual has a valid license in accordance with the provisions of these rules to conduct such activity. This prohibition does not apply to a property owner installing, constructing, altering, or repairing an OWTS to serve a building the owner occupies or will occupy as the owner’s intended permanent domicile, provided that the owner has obtained written permission for that work and has obtained the Director’s approval of the plans and specifications for that work prior to the start of any construction.

C. No person shall install, construct, alter or repair or cause to be installed, constructed, altered or repaired any OWTS without first obtaining the Director’s written approval of the plans and specifications for such work and without adhering to each and every term of the approval. OWTS repairs in accordance with § 6.18(G)(4) of this Part are exempt from this prohibition.

D. No person shall utilize an OWTS permitted under these rules:

1. In a manner that causes wastewater flow to exceed the OWTS’s design capacity;

2. For other wastewater that doesn’t meet the definition in § 6.8 of this Part; or

3. In a manner that does not conform with the terms of the Department issued permit.

E. Use of a failed OWTS is prohibited except in accordance with the requirements of an enforcement notice or order issued by the Director.

F. No person shall install an OWTS leachfield in an area designated as a freshwater wetland unless approved by the DEM Freshwater Wetlands Program or specifically exempted by regulation or are otherwise allowed by rule.

G. No person shall discharge or allow the entrance of wastewater, treated or untreated, into any watercourse, nor shall they discharge or permit the entrance of such wastewater into any open or covered drain tributary to such watercourse, without the approval of the Director.

H. No person shall discharge any treated or untreated wastewater to the surface of the ground without the approval of the Director. However, this shall not interfere with the spreading of animal manure or compost containing wastewater biosolids originating from a DEM-approved municipal composting facility on the surface of the ground in accordance with normal agricultural practices.

I. The use of acid and organic chemical solvents in any OWTS is hereby prohibited. The Department does not recognize any additive product as being beneficial to the operation of an OWTS.

J. No person shall engage in the business of pumping, cleaning or transporting septage unless such person has obtained a Hazardous Waste Transporter Permit from the Director in accordance with the Rhode Island Rules and Regulations for Hazardous Waste Management.

K. Commercial laundromat(s) shall not be permitted to discharge to an OWTS. Self-service laundry facilities operating in compliance with R.I. Gen. Laws § 46-29-3, "Phosphate Reduction," are exempt from this prohibition.

L. Deep concrete chambers (galleys) as described in § 6.35 of this Part are prohibited for OWTS Applications for New Building Construction and OWTS Applications for Alterations to a Structure (§ 6.18 of this Part).

M. Roof drains, surface drains, and subsurface drains shall not be permitted to discharge to an OWTS.

N. Floor drains that receive wastewater that does not meet the definition in § 6.8 of this Part shall not be permitted to discharge to an OWTS. The Department may prohibit any floor drain from discharging to an OWTS where there is a reasonable likelihood that such wastewater may enter such floor drain.

O. Holding tanks for wastewater are prohibited for Applications for New Building Construction and Applications for Alteration to a Structure.

P. Siphons are prohibited for OWTS with a design flow less than five thousand (5,000) gallons per day unless used as part of an approved Alternative or Experimental Technology approved pursuant to § 6.41 of this Part.

Q. The use of large capacity cesspools is prohibited in accordance with U.S. Environmental Protection Agency "Revisions to the Underground Injection Control Regulations for Class V Injection Wells", December 7, 1999, 40 C.F.R. §§ 9, 144, 145 and 146 (1999), incorporated above at § 6.7(E) of this Part. Any such large capacity cesspool shall cease to be used and shall be properly removed or abandoned in accordance with § 6.56 of this Part.

R. Marine pumpout facilities are prohibited from discharging wastewater to an OWTS other than a holding tank installed pursuant to § 6.29 of this Part.

6.10 Class I, II, III, and IV Licenses

A. Class I Designer's License - A Class I License authorizes the design of a repair to an OWTS, or any component thereof, provided that the repaired OWTS meets one of the criteria below:

1. OWTS, other than alternative or experimental systems, permitted under these rules for residential use with a design flow of less than or equal to nine hundred (900) gallons per day; or

2. Alternative or experimental OWTS for residential use designated by the Director as suitable for a Class I Licensed Designer with a design flow of less than or equal to nine hundred (900) gallons per day.

B. Class II Designer's License - A Class II License authorizes the design of the following:

1. The design of an OWTS repair or OWTS for an alteration to a structure as defined in § 6.18 of this Part, provided that the OWTS meets one of the criteria below:

a. OWTS, other than alternative or experimental systems, permitted under these rules for residential use with a design flow of less than or equal to two thousand (2,000) gallons per day;

b. Alternative or experimental OWTS for residential use designated by the Director as suitable for a Class II Licensed Designer with a design flow of less than or equal to two thousand (2,000) gallons per day;

c. OWTS, other than alternative or experimental systems, permitted under these rules for commercial use with a design flow of less than or equal to nine hundred (900) gallons per day; or

d. Alternative or experimental OWTS for commercial use designated by the Director as suitable for a Class II Licensed Designer with a design flow of less than or equal to nine hundred (900) gallons per day.

2. The design of an OWTS for new building construction as defined in § 6.18 of this Part, provided that the OWTS meets one of the criteria in § 6.10(B)(1)(a) through (d) of this Part and the OWTS is on a lot that does not require a variance from any of the following provisions of the rules:

a. § 6.33 of this Part in regards to OWTS installation in areas where there is a shallow depth to the seasonal high groundwater table or to a restrictive layer or bedrock from the original ground surface;

b. Setbacks in §§ 6.23(C) and (E) of this Part for drinking water supplies; or

c. Setbacks in § 6.23(D) of this Part for the Salt Pond and Narrow River Critical Resource Areas.

C. Class III Designer's License - A Class III license authorizes the design of any OWTS provided for under these rules.

D. Class IV Soil Evaluator's License - A Class IV license authorizes the performance of soil evaluations described in § 6.16 of this Part. Individuals holding a Class IV license will be referred to herein as soil evaluators.

E. Class I, II, III, and IV licenses shall be in effect for a period not to exceed three (3) years following the date of issuance.

6.11 Obtaining a Class I, II, III or IV License

A. Examination - Any individual seeking a license under these rules will be required to pass the appropriate examination administered or sanctioned by the Department. An examination shall be given for each class at least once per year. Each applicant for an examination shall submit a completed application to the Director, which shall include the non-refundable examination and new license application fee. In the event that an individual fails an examination given pursuant to these rules, the individual shall pay the examination and new license fee for each subsequent time an examination is taken.

B. Minimum Qualifications - In order to qualify for an examination, the applicant must demonstrate to the Department with appropriate documentation that the minimum qualifications below are met for the respective examination:

1. Class I - A valid Installer’s License authorizing the installation of OWTSs pursuant to § 6.14 of this Part, or registration as a Professional Land Surveyor with the Rhode Island State Board of Registration for Professional Land Surveyors, or Registration as a Professional Engineer with the Rhode Island State Board of Registration for Professional Engineers. Professional Engineers registered in Rhode Island after December 31, 1994 must be registered as a Civil Engineer or Environmental Engineer.

2. Class II - Registration as a Professional Land Surveyor with the Rhode Island State Board of Registration for Professional Land Surveyors or Registration as a Professional Engineer with the Rhode Island State Board of Registration for Professional Engineers. Professional Engineers registered in Rhode Island after December 31, 1994 must be registered as a Civil Engineer or Environmental Engineer.

3. Class III - Registration as a Professional Engineer with the Rhode Island State Board of Registration for Professional Engineers. Professional Engineers registered in Rhode Island after December 31, 1994 must be registered as a Civil Engineer or Environmental Engineer.

4. Class IV

a. The minimum qualifications for the Class IV exam shall be satisfied by meeting any one of the following:

(1) Registration as a professional soil scientist by the Society of Soil Scientists of Southern New England or the American Registry of Certified Professionals in Agronomy, Crops and Soils;

(2) Four (4) years professional experience in soil studies for OWTS design in Rhode Island or in soil classification, mapping, interpretation or a combination thereof; and successful completion of nine (9) semester hours in soil science from an accredited college or university; or

(3) Two (2) years professional experience in soil studies for OWTS design in Rhode Island or in soil classification, mapping, interpretation or a combination thereof; and a bachelor's degree or graduate degree from an accredited college or university in soil science, geology, engineering or similar discipline with successful completion of nine (9) semester hours in soil science.

b. The Director reserves the right to determine which courses are acceptable in meeting the requirement for nine (9) semester hours in soil science in § 6.11(B)(4)(a)((2)) and ((3)) of this Part above. The Director may determine that certain courses or training other than those from an accredited college or university are an equivalent and acceptable alternative to all or part of the requirement in § 6.11(B)(4)(a)((2)) and ((3)) of this Part above for nine (9) semester hours in soil science.

C. Examination Descriptions

1. The examination for a Class I Designer's License shall be a written examination that, at minimum, addresses the following:

a. Principles of onsite wastewater treatment and dispersal;

b. Understanding of the applicable state rules;

c. Analysis of OWTS failures; and

d. Design and construction of OWTS repairs, with consideration given to soil types and related constraints.

2. The examination for a Class II Designer's License shall, at minimum, address the following:

a. Principles of onsite wastewater treatment and dispersal;

b. Analysis of OWTS failures;

c. Design and construction of OWTS repairs, with consideration given to soil types and related constraints;

d. Advanced principles of onsite wastewater treatment and dispersal;

e. Understanding of the applicable state rules; and

f. Design and construction of new OWTSs, including constraints to design imposed by soils.

3. The examination for a Class III Designer's License shall be a two (2) part written examination, each of which will be graded separately. The first part shall consist of the test given for the Class II License. Passage of the first part makes the applicant eligible for the Class II Designer’s License. Active Class II Licensed Designers in good standing need only take the Class III portion of the exam. The two parts of the Class III examination do not have to be passed concurrently. However, if more than three (3) years elapse after the applicant passes one of the components of the examination, the applicant must retake that portion of the examination originally passed more than three (3) years earlier, unless a Class II License has been issued and is in good standing. In addition to including the Class II examination, the Class III examination shall address the following:

a. Understanding of additional applicable state rules;

b. Groundwater hydrology;

c. Commercial wastewater treatment;

d. Advanced wastewater treatment technologies; and

e. Operation of electrical and mechanical components of OWTSs.

4. The examination for a Class IV License shall have a written and field component, each of which shall be graded separately. The written and field examinations for Class IV do not have to be passed concurrently. However, if more than three (3) years elapse after the applicant passes one of the components of the examination, the applicant must retake that portion of the examination originally passed more than three (3) years earlier. The Class IV License examination shall at minimum address the following:

a. Principles of onsite wastewater treatment and dispersal;

b. Understanding of the applicable state rules;

c. Geology and soils of Rhode Island;

d. Soil textural analysis and profile descriptions;

e. Estimating mean seasonal high groundwater elevations using soil morphology; and

f. Soil moisture and drainage characteristics of soils.

D. Examination Application Submission - Completed applications for examinations, fees and evidence that the applicant meets the minimum qualifications specified in § 6.11(B) of this Part shall be received by the DEM at least forty-five (45) days prior to the date of the applicable examination. Within thirty (30) days of receipt of an application for an examination, the applicant shall be notified as to whether the minimum qualifications in § 6.11(B) of this Part have been met, if more information is needed, or if the applicant is eligible for the examination. If the applicant is determined ineligible, the Department shall provide the applicant with reasons for the determination. The applicant may appeal the Director's decision of ineligibility with the Administrative Adjudication Division.

E. Examination Results - The Department shall notify the applicant of examination results no later than sixty (60) days after the examination date. Minimum passing score for an examination shall be a seventy percent (70%) correct response for all questions comprising the examination. For those applicants that pass the examination, the notification will include a license application form.

F. The license shall be issued to natural persons only and is not transferable or assignable.

6.12 Expiration and Renewal of a Class I, II, III or IV License

A. Expiration - Once a license issued pursuant to this rule has expired, the individual that held such license is prohibited to practice as a Licensed Designer or Soil Evaluator.

B. Renewal Prior to Expiration - A license issued pursuant to this rule may be renewed provided that:

1. The applicant pays the renewal fee;

2. The applicant certifies that the professional license(s) required as a minimum qualification for the respective exam is valid;

3. The applicant demonstrates satisfactory completion of a minimum of four (4) continuing education units of appropriate professional development per year since the applicant's license was issued or renewed. Events eligible for this continuing education shall be rated by the Director with consideration of their value and applicability to the relevant design class. Eligible events will be assigned “continuing education units.” The Director shall maintain a list of approved continuing education events and the units assigned to each; and

4. The applicant demonstrates satisfactory compliance with any unresolved OWTS regulatory requirements, including submission of properly completed Certificates of Construction and, where necessary, as-built plans.

C. Renewal After Expiration - If the license has expired, the license may be renewed provided the request is made within three years of the license expiration, the applicant pays a late fee, and the applicant demonstrates compliance with § 6.12(B) of this Part. The licensing exam may not be taken in lieu of satisfying the renewal provisions herein. If the license is not renewed within the three (3) year period after expiration, the applicant must retake and pass the appropriate examination, then reapply for the license.

6.13 Disciplinary Action for Class I, II, III and IV Licensees

A. Where the Director has identified negligence, incompetence or misconduct on the part of a licensee in fulfilling the requirements of these rules, the Director may issue a notification letter to the licensee documenting the transgression. A copy of the notification shall be placed in the licensee's file, and a copy shall be provided to the review panel established pursuant to § 6.13(E) of this Part.

B. Denial, Suspension, or Revocation of License - The Director may deny, suspend or revoke a license if the individual has failed to comply with the requirements in these rules or where the individual:

1. Provided incorrect, incomplete or misleading information in obtaining the license;

2. Demonstrated gross or repeated negligence, incompetence or misconduct in representation of site conditions; design of an OWTS; preparation of any plans, certifications or applications submitted to the Department; in the inspection of an installation of an OWTS; in the supervision of subordinates performing work covered under these rules; or by lack of responsiveness to inquiry by the Department pursuant to a complaint being investigated by the Department;

3. Committed a felony involving moral turpitude; or

4. Has a professional license that is a minimum qualification to obtain the designer's license in § 6.11(B) of this Part which has expired, is suspended or is revoked.

C. Penalties - The Director may assess penalties in association with any suspension or revocation of a license or where a licensee has failed to comply with the requirements in these rules. Penalties shall be assessed in accordance with the Department's "Rules and Regulations for the Assessment of Administrative Penalties", Part 130-00-1of this Title.

D. Denial of License Renewal - The Director may deny the renewal of a license if the individual has failed to comply with the requirements in these rules or where the individual:

1. Provided incorrect, incomplete or misleading information in obtaining the license;

2. Demonstrated gross or repeated negligence, incompetence or misconduct in representation of site conditions; design of an OWTS; preparation of any plans, certifications or applications submitted to the Department; in the inspection of an installation of an OWTS; or in the supervision of subordinates performing work covered under these rules;

3. Committed a felony involving moral turpitude;

4. Failed or neglected to comply with the professional development continuing education requirements;

5. Failed to comply with a quality control plan submission or requirements as required by the Department to address deficiencies in application submittals; or

6. Has a professional license that is a minimum qualification to obtain the designer's license in § 6.11(B) of this Part which has expired, is suspended or is revoked.

E. Review Panel - The Director shall appoint a Review Panel which shall consist of five (5) members, at least three (3) of whom shall be licensed under this rule and not be employed by the Director. Members of the Review Panel shall be appointed for a two (2) to five (5) year term. The Director may appoint new members to serve out the remaining time of those members who leave the Review Panel before the end of their term. The Director may also limit the number of terms an individual can serve. The Review Panel shall conduct regular meetings as needed, but shall meet not less than once every six (6) months. The Review Panel shall have the authority to:

1. Review complaints against Licensed Designers and Soil Evaluators, including requesting information to aid such review;

2. Review the performance related deficiencies identified pursuant to § 6.13(A) of this Part; and

3. Recommend to the Director to suspend or revoke a license, including the time period for the suspension or revocation, and other remedial action that may be appropriate, which would depend on the characterization of the severity of the violations involved.

F. The Director shall be responsible for all final decisions regarding denial, suspension and revocation of licenses issued pursuant to these rules as well as any other disciplinary actions to be brought against a licensee. Nothing herein shall prevent or restrict the Director from initiating any disciplinary action regarding denial, suspension or revocation of a license without the recommendation of the Review Panel.

G. Complaint Review - The procedure for Departmental review of complaints regarding Licensed Designers or Soil Evaluators is described below. At any time during the review of the complaint, the Director may request an informal meeting with the licensee to discuss the complaint.

1. Upon receipt of a written complaint regarding a Licensed Designer or Soil Evaluator, the Director shall contact the licensee and all relevant parties to the complaint as part of the Director's preliminary review.

2. If as a result of the preliminary review, the Director concludes that the complaint lacks merit or is not within the Department's jurisdiction under these rules, the Director shall dismiss the complaint and no record of the complaint shall be placed in the licensee's file.

3. If as a result of the preliminary review, the Director concludes that the complaint may have merit, the Director shall forward the complaint and a report of any findings to the Review Panel.

4. The Review Panel shall review the complaint and make recommendations appropriate to its authority to the Director.

H. Notice of Intent - In accordance with R.I. Gen. Laws § 42-35-14, before the Director denies renewal of, suspends or revokes a license, the Director will issue a Notice of Intent by certified mail or hand delivery to the licensee notifying the licensee of the Director's intention to deny renewal of, revoke or suspend the license and the reasons why the Director intends to take such action. The licensee receiving the Notice of Intent may request a preliminary hearing before the Director or his or her designee to show cause why the Director should not deny, revoke or suspend the license. Such hearing shall be held within thirty (30) days of the Director’s receipt of a written request by the licensee or an attorney representing the licensee for such preliminary hearing. If the licensee fails to request a preliminary hearing within twenty (20) days of receipt of the Notice of Intent, fails to make himself or herself reasonably available to attend a preliminary hearing, or fails to show cause to the Director or his or her designee why the Director should not deny renewal, revoke or suspend the license, the Director may deny renewal, revoke or suspend the license in accordance with these rules and other applicable statutes or regulations. If the Director finds that public health, safety, or welfare imperatively requires emergency action, and incorporates a finding to that effect in its order, summary suspension may be ordered pending proceedings for revocation or other action.

I. Request for Hearing - Requests for a hearing on the denial of examination eligibility, denial of renewal, suspension, or revocation of a license must be filed with the clerk of the Department of Environmental Management, Administrative Adjudication Division within thirty (30) days of the date of the licensee’s receipt of such notice by certified mail or hand delivery.

J. Censure - The Director may publicly censure any Licensed Designer or Soil Evaluator whose license has been subject to an official enforcement action.

K. Suspension - Any individual with a suspended license is prohibited from practicing any work allowed under the license, renewing the license, or applying for a new license for the period of the suspension.

L. Revocation - Any individual who has a license revoked pursuant to this Rule shall not petition the Director for reinstatement for a period of time to be determined by the Director.

6.14 Installer's License

A. Installer’s License - An Installer’s License authorizes an individual to install, construct, alter or repair an OWTS. A Licensed Installer shall install an OWTS in accordance with § 6.47 of this Part.

B. Obtaining an Installer's License

1. Each applicant for an Installer's License shall submit a completed application to the Director along with a non-refundable application fee.

2. Applicants for an Installer's License will be required to demonstrate possession of and ability to properly use a level or transit and to obtain a passing grade on a written examination given by the Director. The examination shall be intended to demonstrate an applicant's understanding of the rules and the ability to read and interpret approved plans and specifications for OWTSs.

3. Installer's Licenses are not transferable or assignable and shall automatically become invalid upon suspension or revocation.

4. Installer's Licenses shall be in effect for a period not to exceed three (3) years following the date of issuance.

C. Expiration, Renewal, and Reinstatement of Installer's Licenses

1. Once an Installer's License issued pursuant to this rule has expired, the individual that held such license is prohibited to practice as a Licensed Installer.

2. An Installer's License shall be renewed upon payment of a renewal fee and the submittal of proof of completion of any professional development continuing education required by the Director.

3. If an installer's license has expired for less than one (1) year, the license may be reinstated in accordance with § 6.14(C)(2) of this Part. If the license has expired for greater than one (1) year, the license may be reinstated provided the request is made within three (3) years of the license expiration; the applicant pays a reinstatement fee; and the applicant demonstrates completion of any professional development continuing education as required by the Director. If the license is not reinstated within the three (3) year period after expiration, the applicant must reapply for the license and take the installer's examination.

D. Denial, Suspension and Revocation of Installer's Licenses

1. The Director may deny, suspend or revoke an Installer's License if the individual has failed to comply with the requirements in these rules or where the individual:

   a. Provided incorrect, incomplete or misleading information in obtaining the license; or

   b. Demonstrated gross or repeated negligence, incompetence or misconduct in installing OWTSs.

2. In accordance with R.I. Gen. Laws § 42-35-14, before the Director suspends or revokes a license, the Director will issue a Notice of Intent to Revoke/Suspend a license by certified mail or hand delivery to the licensee notifying the licensee of the Director's intention to revoke or suspend the license and the reasons why the Director intends to take such action. The licensee receiving the Notice of Intent to Revoke/Suspend may request a preliminary hearing before the Director or his or her designee to show cause why the Director should not revoke or suspend the license. Such hearing shall be held within thirty (30) days of the Director's receipt of a written request by the licensee or an attorney representing the licensee for such preliminary hearing. If the licensee fails to request a preliminary hearing within twenty (20) days of receipt of the Notice of Intent to Revoke/Suspend, fails to make himself or herself reasonably available to attend a preliminary hearing, or fails to show cause to the Director or his or her designee why the Director should not revoke or suspend the license, the Director may revoke or suspend the license in

accordance with these rules. If the Director finds that public health, safety, or welfare imperatively requires emergency action, and incorporates a finding to that effect in its order, summary suspension may be ordered pending proceedings for revocation or other action.

3. The licensee may request a hearing on the denial, suspension, or revocation of a license with the Department of Environmental Management, Administrative Adjudication Division within thirty (30) days of the date of receipt of such notice.

4. The Director may publicly censure any Licensed Installer whose license has been suspended or revoked.

5. Any individual with a suspended Installer's License is prohibited from practicing any work allowed under the license, renewing the license, or applying for a new license for the period of the suspension.

6. Any individual who has an Installer's License revoked pursuant to this rule shall not petition the Director for reinstatement for a period of time to be determined by the Director.

6.15 Onsite Wastewater Treatment Systems - General

A. Any dwelling or other building having plumbing fixtures from which wastewater is produced, in a location where no public wastewater system is available or accessible, shall be provided with an OWTS of type and design approved by the Director.

B. All of the components of an OWTS shall be located within the boundary of the property upon which the building or dwelling served by the OWTS is located. Exemption to this requirement may be granted for OWTSs serving more than one (1) unit in a proposed subdivision or for any OWTS repair.

C. Household Laundry Systems - For an OWTS designed to receive household laundry waste only, a leachfield sized to accept twenty percent (20%) of the design flow may be used without the installation of a septic tank.

D. Issuance of Building Permits For Activities Requiring Approval Under These Rules - A municipality shall not issue a building permit pursuant to R.I. Gen. Laws Chapter 23-27.3, unless all written approvals by the Director required by these rules have been presented to the municipality and said approvals are valid at the time of the issuance of the building permit.

E. Connection to a Public Wastewater System - An OWTS application shall not be approved if such OWTS is proposed to serve a premises for which a public wastewater system is reasonably accessible as determined by the Director, and for which permission to enter the public wastewater system can be obtained from the authority having jurisdiction. The Director shall require the owner or occupant to connect the structure to a public wastewater system within a specified period of time if the following occur:

1. The OWTS is failing;

2. Public wastewater system is reasonably accessible as determined by the Director; and

3. Permission to connect to the public wastewater system can be obtained from the authority having jurisdiction over it.

F. Component Substitution - For an OWTS approved, but not yet installed, with a septic tank, grease tank, pump tank, or distribution box that does not meet the updated construction standards in these rules, a substitution of components complying with these rules may be made provided as-built plans are submitted to the Department upon completion of construction. No substitution of leachfields or leachfield components may be made under this § 6.15(F) of this Part.

G. Data Quality - Effluent samples and water quality samples shall be collected, stored, transported, and analyzed in accordance with the United States Environmental Protection Agency approved procedures.

6.16 Soil Evaluation

A. Soil Evaluation Required - A soil evaluation shall be required for an OWTS Application for New Building Construction, for an OWTS Application for Alteration of a Structure, and for an OWTS Application for Repair for non-residential uses in accordance with § 6.18 of this Part.

B. Validity of Field Data - Field data shall be considered valid for a period of five (5) years from the time of initial certification by the Department or five (5) years from the date of initial approval of any OWTS application, design, or subdivision suitability where the data were used, whichever occurred most recently. Field data older than five (5) years may be used provided that § 6.16(B)(1) through (3) of this Part are met. Field data cannot be renewed independent of an OWTS application or subdivision site suitability certification application.

1. The field conditions are essentially unchanged;

2. The field data was initially compiled and certified after July 20, 1987 for subdivisions or after December 31, 1992 for individual lots; and

3. Its continuing validity is properly certified on the OWTS application or Application for Subdivision Site Suitability Certification.

C. Soil Evaluation Requirements - The soil evaluation shall be prepared on forms approved by the Director. The soil evaluation shall contain a site sketch and the information in § 6.16(C)(1) through (6) of this Part. The information in § 6.16(C)(1) and (2) of this Part shall be completed by a Soil Evaluator, and may be required to be witnessed by the Director in accordance with § 6.16(E) of this Part. The information in items § 6.16(C)(3) through (6) of this Part shall be determined by a Class II or III Licensed Designer or a Soil Evaluator. The test holes excavated for the soil evaluation shall be within the area of the proposed leachfield as described in § 6.16(I) of this Part.

1. Comprehensive soil profile description and textural analysis identifying the characteristics of the soil and using the terminology in the DEM Soil Evaluation Guidance Document (this document can be found at: http://www.dem.ri.gov/programs/benviron/water/permits/isds/pdfs/seg0108.pdf);

2. Identification of the seasonal high groundwater table in accordance with § 6.16(M) of this Part;

3. General description of slope;

4. Presence of any watercourse, wetlands, or surface water bodies within two hundred (200) feet of the proposed leachfield;

5. Presence of any drains that may influence the seasonal high groundwater table; and

6. Approximate location of property lines.

D. Soil Evaluation Application - An application form shall be submitted to the Director by the Soil Evaluator prior to conducting the soil evaluation field work on the site. Such application will be on forms approved by the Director and will require at minimum a locus map and photocopy of the relevant page or section thereof from the U.S. Department of Agriculture Soil Survey with the site location marked. The Director shall determine if the soil evaluation must be witnessed by the Department. The Director shall notify the applicant within ten (10) business days of receipt of the application as to whether or not the soil evaluation must be witnessed by the Department.

E. Soil Evaluation Witnessed by the Department

1. At the time of the notification in § 6.16(D) of this Part, an appointment will be scheduled for the Department to witness the soil evaluation. This appointment shall be within fifteen (15) business days of the Director's notification in § 6.16(D) of this Part.

2. Requests for cancellation of the soil evaluation appointment will be accepted by the Director a minimum of twenty-four (24) hours in advance of the scheduled appointment, and if requested, will be rescheduled for the next available date. All other cancellations, including instances where the Director is onsite and the Licensed Designer or Soil Evaluator is not present, will require reapplication to the Director. If the Director is not onsite for the scheduled appointment, the completed soil evaluation shall be submitted to the Director prior to the submission of the application for an OWTS permit.

3. The Soil Evaluator shall complete the soil evaluation form prior to the arrival of the Director onsite for the scheduled appointment with the Department. While in the field, the Director shall determine which of the following apply:

   a. The Director concurs with the determination of the soil evaluation. The soil evaluation form shall be submitted to the Department within ninety (90) days of the scheduled appointment and may be submitted concurrently with the OWTS Application;

   b. The Director and the Soil Evaluator concur that results of the seasonal high groundwater table determination are inconclusive, and a determination will have to be made during the wet season in accordance with § 6.16(M)(4) of this Part; or

   c. The Director does not concur with the soil evaluation. If soil conditions are in dispute, the Department, upon request of the Soil Evaluator, shall provide an additional field review in an effort to resolve the dispute.

      (1) If the determination of the seasonal high groundwater table remains in dispute after the additional field review and all other elements of the soil evaluation are agreed upon, the Soil Evaluator has the option to conduct a wet season determination of the seasonal high groundwater table in accordance with § 6.16(M)(4) of this Part.

      (2) If elements of the soil evaluation other than the seasonal high groundwater table remain in dispute after the additional field review, the Department shall disclaim the determinations of the soil evaluation and provide an explanation for not accepting it.

F. Soil Evaluation Not Witnessed by the Department - If the Director determines that the Department need not witness the soil evaluation, the Licensed Designer or Soil Evaluator shall notify the Department during normal business hours by telephone of the date and time of the soil evaluation at least twenty-four (24) hours prior to conducting the soil evaluation. The Department, at its discretion, may make unannounced inspections of any soil evaluation. The soil evaluation form shall be submitted to the Director prior to the submission of the application for an OWTS permit and within ninety (90) days of the day the soil evaluation was conducted.

1. If bedrock is encountered within a test hole during a soil evaluation not witnessed by the Department, the Licensed Designer shall apply to the Department for bedrock testing.

2. After review of the soil evaluation, the Director shall either:

   a. Accept the determination of the soil evaluation;

   b. Determine that the soil evaluation is not in compliance with these rules or that more information must be collected, in which case a revised soil evaluation must be submitted to the Director; or

c. Disclaim the determinations of the soil evaluation, and provide an explanation for not accepting it.

G. Soil Evaluation Certification - Individuals conducting a soil evaluation shall certify that the soil evaluation was conducted in a manner consistent with these rules and that it is an accurate portrayal of site conditions on the day and time it was conducted. If more than one individual licensed under these rules participated in the development of the soil evaluation it must be specified who prepared which part and include a certification from each licensee.

H. Department Acceptance - Acceptance of a soil evaluation indicates only that the Department accepts the data for design of an OWTS, however, the Department reserves the right to question the data. This acceptance is not an indication of the correctness or quality of the soil evaluation.

I. Test Hole Requirements

1. A minimum of two (2) test holes within twenty-five (25) feet of the proposed leachfield, shall be excavated at least twenty-five (25) feet apart with one pit on the up-gradient side and one on the down-gradient side of the proposed leachfield. The Director may waive the requirement for a second test hole where the conditions indicate that such test hole is not necessary.

2. The test holes shall be excavated to a depth of five (5) feet, unless site conditions prevent doing so (e.g., a flooded pit due to a high water table) in order to allow detailed examination by the Soil Evaluator. The Soil Evaluator shall complete the soil evaluation form provided by the Director using the terminology in the DEM Soil Evaluation Guidance Document (this document can be found at: http://www.dem.ri.gov/programs/benviron/water/permits/isds/pdfs/seg0108.pdf).

3. From the depth excavated for § 6.16(I)(2) of this Part to a minimum of ten (10) feet, to the extent possible, the Soil Evaluator shall provide the information requested on the soil evaluation form from material removed from the test hole without entering the test hole. This information shall include at minimum the soil texture, structure and consistence for each soil horizon observed. This can be done in an additional test hole, or in the test hole used to complete work for § 6.16(I)(2) of this Part after such work has been witnessed by the Department, if required.

4. If a restrictive layer or bedrock is encountered or the test hole becomes unstable due to lack of soil cohesion or the presence of groundwater, the test hole may be terminated at a depth of less than ten (10) feet. Sites with test holes which have been terminated at less than ten (10) feet may require additional testing as determined by the Director.

5. It is recommended that individuals performing the soil evaluation not enter into portions of a test hole that have been excavated to depths greater than five (5) feet below the surrounding ground surface. It is the responsibility of individuals performing or witnessing the soil evaluation to comply with all applicable federal, state and local laws and regulations governing occupational safety.

J. Soil Class - The information collected from the test hole shall be used to assign the soil to one of the soil classes below, except for Class G soils in which case the soil class for the substratum shall also be indicated.

1. Class A – Glacial Lodgement Till: Silt loam to loamy sand texture. Lower profiles tend to have a platy structure and are dense to very dense. Excavation is difficult. High probability of hydraulically restrictive lower layers. Angular rock fragments and occasional cobbles and stones.

2. Class B – Glacial Ablation Till: Silt loam to loamy sand throughout the profile. Lower horizons tend to be more sandy. These soils tend to be looser than lodgement tills and typically do not have hydraulically restrictive layers. Lower horizons may be firm. Angular rock fragments and occasional cobbles and stones.

3. Class C – Proglacial Outwash: Also referred to as stratified drift, soil textures range from silt loam to loamy sand (in the upper horizons) to a sandy/gravely substratum. Stratified layers of water sorted materials may be present. Entire profile tends to be loose and easy to dig except saturated horizons may be firm or cemented or both. Horizons of rounded rock fragments are common.

4. Class D – Glacial Ice Contact Deposit: Outwash deposits of well to poorly sorted sands and gravel. Texture can be highly variable over short distances and may include pockets or lenses of silt or silt loam. Stratification may be irregular or absent. Sub-rounded to rounded stones and cobbles are possible.

5. Class E – Coastal Dune: Fine to coarse sands, well sorted, often finely stratified. Little or no silt and clay. Typically no sediment larger than coarse sand. Deposited by wind action or storm overwash.

6. Class F – Alluvial Deposits: Material transported and deposited by streams and rivers. Typically well sorted, stratified, fine textured sediment that may have dark layers in the substratum which were at one time surface layers. Subject to seasonal flooding.

7. Class G – Eolian Deposits: Wind blown silts deposited after the retreat of the Wisconsin glaciation ranging in thickness of several inches to several feet. Underlain by outwash, ablation till, or lodgement till.

K. Soil Category - Each observed soil horizon shall be assigned to one of the soil categories from § 6.16(L) of this Part below. Soil category will be used to determine the minimum leaching area by the Class II or III Licensed Designer in accordance with § 6.33 of this Part.

L. Soil Category

Soil Category	Loading Rate (gals/sq ft/day) Pursuant to Rule 32.2 Starred items (*) are for soils with coarse fragment modifiers	Soil Texture	Soil Structure	Soil Consistence		Typical Soil Class
				Consistence In-Hand Using Soil Clods	Excavation Difficulty	
1	.70 .61*	cos, s, lcos, ls, cosl, fs	structureless- single grain subangular blocky	loose friable	N/A	Outwash (Class C), ice contact (Class D) and coarse ablation till (Class B) deposits
2	.61	vfs, lvfs	structureless- single grain	loose	N/A	Outwash (Class C) and ice contact (Class D) deposits
3	.70	ls, sl, l	granular, subangular blocky	very friable to friable	low	Lodgement Till (Class A), Ablation Till (Class B), Outwash (Class C), or Ice Contact (Class D)
4	.61 .70*	lfs, lvfs, fsl, vfs	granular, subangular blocky	very friable to friable	low	Lodgement Till (Class A), Ablation Till (Class B), Outwash (Class C), or Ice Contact (Class D)
5	.52	sil, si, vfsl	subangular blocky	very friable to friable	low	Typically Eolian deposits (Class G)
6	.61 .70*	lcos, cosl, lfs, ls, sl, l,	structureless massive	very friable to friable	low	Ablation till (Class B)
7	.52 .61*	fsl, vfsl, sil, si, vfs	structureless- massive	very friable to friable	low to moderate	Ablation till (Class B)
8	.46 .48*	all textures	structureless-massive	firm to very firm	moderate	Lodgement till (Class A)
9	.40 .43*	all textures	platy, structureless-massive	firm to very firm	high	Lodgement till (Class A)
10	Not Allowed (Impervious)	all textures	platy, structureless-massive	extremely firm	very high to extremely high	Lodgement till (Class A)

M. Determination of Seasonal High Groundwater Table

1. The Soil Evaluator shall use the depth to, type, location and abundance of hydromorphic features and other characteristics to determine the depth to the seasonal high groundwater table. The depth to the seasonal high groundwater table shall be measured from the original ground surface. The criteria to use in evaluating hydromorphic features include, but are not limited to the following:

    a. Redox depletions and redox concentrations occupy two percent (2%) or more of the exposed horizon surface;

    b. Soil matrix and redox concentrations or depletions vary two (2) or more units in chroma; or

    c. Presence of a depleted horizon, which is a soil layer that has a chroma of two (2) or less and a value of four (4) or more that develops or maintains gleyed colors because of substantial saturation.

2. In cases where the soil is class C or D as determined in § 6.16(J) of this Part and there are no observable hydromorphic features to use to make a determination in accordance with § 6.16(M)(1) of this Part, an adjustment factor may be applied to the observed groundwater table in order to correct to the seasonal high groundwater table. This adjustment factor shall be determined by the Director. When groundwater is not encountered in a test hole at least ten (10) feet deep, the adjustment factor may be applied as measured from the bottom of the test hole.

3. A perforated pipe at least four (4) inches in diameter shall be installed to the full depth of the excavation in each test hole at the conclusion of the soil evaluation, unless such requirement is waived by the Director. The pipe shall be wrapped in filter fabric that meets the requirements of § 6.33(L) of this Part, capped at the top and mounded to prevent the accumulation of surface water.

4. Wet Season Determinations - Determination of the seasonal high groundwater table during the wet season shall be made by a Class II or III Licensed Designer, or a Soil Evaluator January 1 through April 1.

    a. The groundwater table observations shall be made using the pipe placed in the test holes in accordance with § 6.16(M)(3) of this Part or using a pipe that meets these requirements placed in a minimum of two (2) excavations to a depth of ten (10) feet within the area in § 6.16(I)(1) of this Part. Such pipe should remain in place until a permit has been issued by the Director.

    b. Groundwater table observations shall be made no sooner than forty-eight (48) hours after excavation and shall be verified by the Director unless otherwise waived. At least three (3) groundwater table observations shall be made and the observations shall be a minimum of five (5) days apart. The groundwater table observations shall be submitted for review by April 1 on forms approved by the Director.

    c. Wet season determinations are intended to measure the groundwater table at its annual highest level. Yearly fluctuations in the groundwater table may necessitate that the Department add adjustment factors to compensate for periods of low groundwater recharge that results in the seasonal high groundwater table to be lower than normal.

5. The soil evaluation that is submitted to the Director by the Soil Evaluator shall include wet season data, if applicable, along with the final determination of the seasonal high groundwater table.

6.17 Additional Site Testing

A. Determination of depth to bedrock and the presence of storm deposited sand in the backdune environment or human transported material, as required in § 6.17(B) and (C) of this Part, shall be made by a Class II or III Licensed Designer or a Soil Evaluator on forms approved by the Director.

B. Determination of Depth to Bedrock

1. Bedrock test holes, conducted in accordance with § 6.17(B)(2) of this Part, shall be required when any of the following occur:

   a. Bedrock is encountered within eight (8) feet of original ground surface in the excavation of any of the test holes for the soil evaluation;

   b. Bedrock outcrops are visible in the surrounding area; or

   c. Landscape conditions warrant bedrock test holes.

2. Bedrock test holes

   a. Bedrock test holes shall be excavated to a depth of ten (10) feet in the center and four corners of the proposed leachfield. Additional test holes or probe tests shall be required within twenty-five (25) feet of the proposed leachfield, the number and location depending on the site. Bedrock depth shall be determined on all sides of the proposed leachfield. In order for DEM approval, testing must demonstrate that:

      (1) Bedrock is at least five (5) feet below the bottom elevation of the stone in the leachfield in the area of the proposed leachfield and within twenty-five (25) feet of the proposed leachfield. The five (5) foot vertical separation requirement may be waived on the up-gradient side as long as bedrock is no higher than the bottom of the stone in the leachfield within twenty-five (25) feet of the proposed leachfield (§ 6.59 of this Part, Figure 1); and

      (2) Depth to Bedrock from original ground surface must be a minimum of four (4) feet within twenty-five (25) feet on all sides of the leachfield, including the upgradient side.

   b. A bedrock test hole shall be witnessed by the Director unless the Director waives this requirement.

   c. If during the bedrock exploration work the Director determines that additional bedrock test holes or probe tests are not warranted, then the Director may waive such additional testing.

C. Human Transported Material and Storm Deposited Sand - If human transported material or storm deposited sand in the backdune environment is encountered in the excavation of any test hole or is evident within twenty-five (25) feet of any test hole, an adequate number of additional test holes shall be excavated to a sufficient depth to determine the lateral and vertical extent of this material within twenty-five (25) feet of the leachfield. Limitations for OWTS design regarding depth to groundwater and depth to bedrock shall be determined from original ground surface. The Director may require that this material existing in the area of the proposed leachfield be removed. Test holes in human transported material or storm deposited sand in the backdune environment shall be witnessed by the Director unless the Director waives this requirement.

6.18 OWTS Applications

A. Applicant’s Responsibilities - The applicant shall be responsible for providing all information required by these rules in a complete, accurate, clear and legible manner. The applicant for an OWTS must be the owner or owners of the property or easement that is the subject of the application, or it must be the person who holds a valid purchase and sales agreement for said property.

B. Designer’s Responsibility - Class I, II and III Licensed Designers shall design an OWTS for a site that is in compliance with these rules. The design shall be based on the information provided in the soil evaluation report. This design shall be submitted to the Director in accordance with §§ 6.18 and 6.19 of this Part.

C. Local Ordinances - It is the applicant's responsibility to ensure that the OWTS application to the Department is in compliance with local ordinances regarding the location, design, construction and maintenance of an OWTS prior to submission to the Department. City or Town Councils may petition the Department to require municipal review for compliance with local ordinances prior to DEM initiating its review. The petition must state the local standard(s), as embodied in local ordinance, that is more stringent than the standard(s) in these rules and the municipal official responsible for local review. In municipalities where the petition has been approved, applicants must submit documentation to DEM on forms approved by DEM that the municipality has certified that the application is in compliance with all local ordinances.

D. OWTS Suitability Determination - An OWTS Suitability Determination is a determination as to whether or not an existing OWTS is suitable for a proposed building construction, renovation or change of use so as to protect public health and the environment. For OWTS with no available records, a Class II or Class III Licensed Designer may prepare an engineering analysis that must show the OWTS complies with current rules. An OWTS Suitability Determination Application may be submitted to the Department in order to determine the applicability of this rule. OWTS suitability is determined by the following:

1. Excluding holding tanks, for OWTSs where all components have been installed with State approval on or after April 9, 1968:

a. The OWTS is suitable and no application to the Department is necessary for any building construction, renovation or change in use, that, for residential uses, does not result in an increase in the number of bedrooms in a residential structure beyond the number in the original State approval; or, for all other uses, an increase in the wastewater flow greater than the OWTS approved design flow for any OWTS. However, the OWTS is unsuitable and an OWTS Application for New Building Construction or an OWTS Application for Alteration to a Structure, whichever is applicable, must be submitted when any of the following in §§ 6.18(D)(1)(a)((1)) through ((3)) of this Part apply, even if there is no increase in number of bedrooms or increase in flow:

(1) Whenever the proposed construction or renovation changes the structure's footprint such that the OWTS is not in compliance with these rules;

(2) If the proposed change of use is from a facility that does not prepare food to a restaurant or other facility that prepares food; or

(3) For a change in use, if the OWTS for the new use meets the definition of a large OWTS pursuant to § 6.39(A) of this Part.

b. The OWTS is unsuitable if the OWTS is located within the Salt Pond or Narrow River Critical Resource Areas, includes any existing components permitted and installed prior to February 6, 2002, and does not utilize nitrogen reducing technology in accordance with § 6.43(B) of this Part at the time of application and the applicant proposes building construction or renovation meeting any of the conditions listed below in § 6.18(D)(1)(b)((1)) and ((2)) of this Part. In-kind (i.e. same number of bedrooms) replacement of mobile homes in a licensed mobile and manufactured home park is exempt from this provision § 6.18(D)(1)(b) of this Part.

(1) Increasing the total enclosed area of the structure by more than six hundred (600) square feet. All construction on each floor shall be counted towards the six hundred (600) square foot total for the structure. Any change to the building footprint shall not encroach on the setback distances established in § 6.23 of this Part so as to require physical modification of the OWTS. Garages are exempt from this provision § 6.18(D)(1)(b)((1)) of this Part provided they do not encroach on the setback distances established in § 6.23 of this Part; or

(2) Involves demolition or replastering or replacement of interior wallboard, interior walls, ceilings, flooring, windows, plumbing fixtures, electrical wiring or kitchen cabinetry, which in total affects over fifty percent (50%) or more of the living area of the existing structure.

c. The OWTS is unsuitable for any building construction, renovation, or change of use, that results in an increase in the number of bedrooms in a residential structure beyond the number in the original State approval; or an increase in the wastewater flow greater than the OWTS approved design flow for any OWTS. An OWTS Application for New Building Construction or an OWTS Application for Alteration to a Structure shall be required in accordance with § 6.18(E) or (F) of this Part, respectively, whichever is applicable, before the proposed building construction, renovation or change of use may be allowed.

2. For OWTSs where any existing components have been installed without State approval, holding tanks, cesspools, and OWTSs installed prior to April 9, 1968: Whenever a person proposes any building construction, renovation, or change of use (as defined in § 6.8 of this Part) of a structure served by such an OWTS, the OWTS is unsuitable and shall be upgraded to the standards herein. An OWTS Application for New Building Construction or an OWTS Application for Alteration to a Structure shall be required in accordance with § 6.18(E) or (F) of this Part, respectively, whichever is applicable. For the purposes of this rule, the terms "building construction" and “building renovation" shall be defined as any addition, replacement, demolition and reconstruction, or modification of a structure on the subject property which:

a. Results in any increase in wastewater flow into the OWTS, which for residential structures is equivalent to the addition of one (1) or more bedrooms;

b. Involves demolition or replastering or replacement of interior wallboard, interior walls, ceilings, flooring, windows, plumbing fixtures, electrical wiring or kitchen cabinetry, which in total affects over fifty percent (50%) or more of the living area of the existing structure. In-kind (i.e. same number of bedrooms) replacement of mobile homes in a licensed mobile and manufactured home park is exempt from this provision § 6.18(D)(2)(b) of this Part;

c. Involves adding an additional floor level or portion of floor level to the structure; or

d. Increases the footprint of enclosed space of the structure. Garages are exempt from this provision § 6.18(D)(2)(d) of this Part provided they do not encroach on the setback distances established in § 6.23 of this Part. In-kind (i.e. same number of bedrooms) replacement of mobile homes in a licensed mobile and manufactured home park is exempt from this provision § 6.18(D)(2)(d) of this Part.

3. Imminent Sewer Exemption - An owner subject to the requirements of § 6.18(D)(1)(a)(1) through (3), § 6.18(D)(1)(b), § 6.18(D)(1)(c), or § 6.18(D)(2) of this Part whose property is proposed to be served by a public wastewater system in the future shall be exempt from those requirements, provided an OWTS Suitability Determination Form is submitted to the local building official demonstrating that all of the conditions in §§ 6.18(D)(3)(a) and (b) of this Part are met. A copy of the completed form shall be provided to the Department. In order to claim exemption, the owner must:

a. Provide a letter demonstrating that the municipality holds a form of financial surety for expansion of a public wastewater system to the area of the structure served by the OWTS within five (5) years of the date of the submission of the OWTS Suitability Determination Form; and

b. Certify that:

(1) The OWTS is not failed;

(2) For a residential structure, any increase in wastewater flow to the OWTS is limited to that equivalent to one bedroom. For all other uses, no increase in wastewater flow to the OWTS is allowed; and

(3) The structure will be connected within sixty (60) days of the public wastewater system becoming available.

E. OWTS Application for New Building Construction - All OWTS Applications for New Building Construction shall be made in conformance with all requirements under these rules. Applications not in conformance with these rules may be approved only through the variance procedures set forth in § 6.51 of this Part.

1. An OWTS Application for New Building Construction shall be made whenever an applicant proposes to:

a. Construct a new structure from which wastewater will be disposed of by means of an OWTS;

b. Modify a structure, not previously permitted to dispose of wastewater, to require the disposal of wastewater to an OWTS;

c. Increase wastewater flow to an OWTS by an amount greater than twenty-five percent (25%) of the original design flow with all flows adjusted using the design flows in § 6.22 of this Part, provided that using the design flows and loading rates in these rules would result in a leachfield larger than that previously approved by the Department; or

d. Add more than one bedroom.

2. All plans and specifications for an OWTS Application for New Building Construction shall be prepared by a Class II or Class III Licensed Designer in accordance with §§ 6.10 and 6.11 of this Part.

3. No person shall submit applications, plans and specifications to the Director for an OWTS for New Building Construction without first obtaining the Director's acceptance of a soil evaluation or field concurrence with the soil evaluation in accordance with § 6.16 of this Part. If the Director concurs with the determination of the soil evaluation in accordance with § 6.16(E)(3)(a) of this Part and the soil conditions meet the minimum requirements of these rules, the soil evaluation may be submitted with the application for an OWTS permit.

F. OWTS Application for Alteration to a Structure

1. An OWTS Application for Alteration to a Structure shall be made whenever an applicant proposes any physical alteration to a structure that meets any of the following:

a. In the case of a residence, the addition of not more than one bedroom;

b. In all other cases, an increased flow of wastewater in an amount less than or equal to twenty-five percent (25%) of the original design flow adjusted using the design flows in § 6.22 of this Part provided that using the design flows and loading rates in these rules would result in a leachfield larger than that previously approved by the Department; or

c. If the OWTS is determined to be unsuitable pursuant to § 6.18(D) of this Part with no increase in flow.

2. All plans and specifications for an OWTS Application for Alteration to a Structure shall be prepared by a Class II or Class III Licensed Designer in accordance with §§ 6.10 and 6.11 of this Part. The Director reserves the right to require that the plans and specifications for an OWTS Application for Alteration to a Structure be prepared by a Class III Licensed Designer.

3. No person shall submit applications, plans and specifications to the Director for an OWTS for an Alteration to a Structure without first obtaining the Director's acceptance of a soil evaluation or field concurrence with the soil evaluation in accordance with § 6.16 of this Part. If the Director concurs with the determination of the soil evaluation in accordance with § 6.16(E)(3)(a) of this Part and the soil conditions meet the minimum requirements of these rules, the soil evaluation may be submitted with the application for an OWTS permit.

4. Applicants shall meet the requirements of these rules to the greatest extent possible. The applicant shall identify which rules, if any, the proposed OWTS fails to meet. If necessary, certain requirements under these rules may be relaxed at the discretion of the Director, provided that the applicant considers the Department approved alternative or experimental technology in accordance with § 6.41 of this Part that may allow the applicant to meet most of the requirements of these rules. The protection of the public health and the environment shall be given priority over all other considerations. Nothing herein shall prevent the Director from requesting additional information or imposing any requirement under these rules. Variance application procedures will only apply to OWTS Applications for Alteration to a Structure that propose an increase in wastewater flow. OWTS Applications for Alteration to a Structure that include a request for a variance from the provisions of these rules are exempt from the notification requirements in § 6.51(F)(1) of this Part.

G. OWTS Application for Repair - An application for a repair of any OWTS, or any component thereof, shall be made when an OWTS or component has failed, as defined by § 6.8 of this Part. An application for repair shall not propose any change of use, building renovation pursuant to § 6.18(D)(2)(a) through (d) of this Part or any increased flow to the OWTS. The Department may allow an OWTS Application for Repair to be submitted when, after the effective date of these rules, a fire or other catastrophic occurrence necessitates that a structure served by an OWTS be replaced. The applicant may also submit an OWTS Application for Repair when the property owner desires to upgrade or modernize the OWTS (e.g., replacement of cesspool).

1. All plans and specifications for an OWTS application for Repair shall be prepared by a Class I, II or III Licensed Designer in accordance with §§ 6.10 and 6.11 of this Part. The applicant is not required to have a soil evaluation pursuant to § 6.16 of this Part prepared unless the Department specifies otherwise. The Director reserves the right to require that the plans and specifications for a repair be prepared by a Class II or Class III Licensed Designer.

2. Applicants shall meet the requirements of these rules to the greatest extent possible. If necessary, certain requirements under these rules may be relaxed at the discretion of the Director, provided that such modification is consistent with the protection of the public health and the environment. In reviewing any request for relaxation of these rules, the protection of the public health and the environment shall be given priority over all other considerations.

3. Deep concrete chambers will not be permitted for OWTS Applications for Repair where another type of leachfield designed in accordance with §§ 6.33, 6.34, and 6.35 of this Part can be sited and is deemed acceptable by the Department. The Licensed Designer must demonstrate that the repair alternatives to a deep concrete chamber, other than a bottomless sand filter or pressurized shallow narrow drainfield, are not feasible.

4. Exemptions for OWTS Application for Repair - Under the limited circumstances in § 6.18(G)(4)(a) through (e) of this Part, an OWTS Application for Repair will not be necessary prior to repairing the OWTS. Any repair or installation work done in accordance with § 6.18(G)(4)(a) through (e) of this Part that is found not to be in compliance with these rules, will have to be corrected and will be considered a violation of these rules.

a. Septic Tank Replacement - When a crushed tank or other failure necessitates replacement to maintain wastewater handling capacity at a facility and averting a public health threat, the installer must receive verbal authorization from the Department prior to septic tank installation and the owner must submit a proper and complete repair application by the end of the next business day.

b. Building Sewer - Replacing a crushed or otherwise repairing a faulty building sewer between the building and the septic tank does not require prior authorization of the Department or notification to the Department once the work is completed.

c. Access Openings - The following work on access openings does not require prior authorization of the Department or notification to the Department once the work is completed:

(1) Installation of access openings to finished grade; and

(2) Compliance with the requirements to upgrade the cover of existing tanks that have access openings to finished grade in accordance with § 6.26(L), § 6.27(O), § 6.29(G), § 6.30(H), and § 6.35(H)(2)(d) of this Part.

d. Retrofitting for a septic tank effluent screen - Such work does not require prior authorization of the Department or notification to the Department once the work is completed.

e. In-kind emergency replacement of a failed mechanical or electrical device does not require prior authorization of the Department or notification to the Department once the work is completed.

H. Unacceptable Application - When the Department determines that an application is unacceptable for any reason, the applicant has one (1) year from the date of the unacceptable notice to correct all deficiencies identified by the Department. However, if any of the deficiencies are related to an application to the DEM Freshwater Wetlands Program or a Rhode Island Department of Health Public Drinking Water New Source Approval Application, the applicant has two (2) years from the date of the unacceptable notice to correct all deficiencies identified by the Department. If all of the deficiencies are not corrected in the time specified above, the applicant must submit a new application and application fee.

I. Suspension of Application Process - The Department may, at its discretion, suspend the processing of an application if the property that is the subject of the OWTS Application is the subject of any unresolved violation of these rules, or which is the subject of any non-compliance with a Department, administrative, or judicial consent agreement, order, or judgment. The Department shall notify the applicant in writing of the suspension.

J. Public Records - All applications received by the Department of Environmental Management are subject to the Public Records Act, R.I. Gen. Laws Chapter 38-2, and are available in accordance with the Act for public inspection and copying at the OWTS Program of DEM between the hours of 8:30 AM and 4:00 PM; a prior appointment may be required. A fee for such copying shall be charged in accordance with R.I. Gen. Laws § 38-2-4.

6.19 Required Content of OWTS Submissions

A. Application - All applications for the approval of plans and specifications for OWTS permits shall be made on forms approved by the Director. Nothing in these rules shall prevent the Director from requiring any additional information deemed necessary to carry out obligations in enforcing these rules.

B. Plan - All applications for New Building Construction, Alterations to a Structure, or redesigns of previously approved applications for New Building Construction or Alterations to a Structure, except those submitted under § 6.20(A)(1)(c) of this Part, shall be accompanied by four (4) sets of plans that include a plan view of the entire property drawn to scale, a plan view of the pertinent portion of the property at a minimum scale of one (1) inch equals forty (40) feet, a profile of the system from the building foundation to the limits of the leachfield with invert elevations shown, and a cross-section of the leachfield. The plans shall include the items below. The Director reserves the right to require any additional information that is deemed necessary. For applications submitted under § 6.20(A)(1)(c) of this Part, six (6) sets of plans must be included.

1. Location map;

2. Rhode Island Coastal Resources Management Council jurisdictional line, if applicable;

3. The size and location of the OWTS;

4. A fixed benchmark within one hundred fifty (150) feet of the OWTS that will not be disturbed during construction;

5. The location of all test holes;

6. The existing and proposed finished grades in the vicinity of the OWTS;

7. The size and location of all existing and proposed buildings and the number of bedrooms and other building features used to determine the maximum daily flow contained therein;

8. The location of any public wastewater system line within two hundred (200) feet of the property lines;

9. The location of any drinking water line within fifty (50) feet of the proposed OWTS;

10. Wells:

    a. The location of existing and proposed private drinking water wells within the setback distance from the leachfield specified in § 6.23(E) of this Part plus one hundred (100) feet;

    b. The location of all existing and proposed wells serving non-potable uses within one hundred (100) feet of the leachfield;

    c. The location of existing and proposed public drinking water supply wells within five hundred (500) feet of the proposed OWTS and a determination as to whether the public well is a bedrock well or a gravel packed, gravel developed or driven well; and

    d. The location of any existing or proposed drinking water well, public or private, serving the structure that the proposed OWTS will serve;

11. The location of all watercourses, wetlands, and drains within two hundred (200) feet of the proposed OWTS;

12. The location of all stormwater management structures and subsurface drains within two hundred (200) feet of the proposed OWTS and a determination and whether said drain discharges, directly or indirectly, into a critical resource area as identified in § 6.42 of this Part;

13. Plans must indicate if the proposed OWTS is within a Critical Resource Area as identified in § 6.42 of this Part and must specify the distance to the nearest critical resource of concern. If the Critical Resource Area boundary crosses the parcel that is the subject of the application, the boundary line shall be shown.

14. The location and design flow of all existing OWTSs within two hundred (200) feet of any private well and four hundred (400) feet of any public well shown in accordance with § 6.19(B)(10) of this Part on the subject property. Plans must also show the location and design flow of any existing OWTS with a design flow of greater than one thousand (1,000) gallons per day within four hundred (400) feet of any well to be installed on the subject property. Records and data on file with the Department may be used to obtain information on proposed OWTSs and wells;

15. Areas on the subject property where soil has been excavated and where storm deposited sand in the backdune environment or human transported material has been deposited;

16. Details of all system components;

17. Erosion controls;

18. Plat and lot boundaries and numbers;

19. Title block, legend and north arrow;

20. Signature and stamp where applicable of the Licensed Designer;

21. The location of driveway access from the roadway to the proposed dwelling; and

22. The location of all structures, existing OWTSs, and water supplies within one hundred (100) feet of all adjacent property lines.

C. Additional Information - Other information to be provided by the applicant shall include, but not be limited to, the items listed below:

1. Soil evaluation for OWTS Applications for New Building Construction and for OWTS Applications for an Alteration to a Structure and those that were required by the Director for OWTS Applications for Repair;

2. Results of seasonal high groundwater table determinations and percolation tests for lots not required to conduct a soil evaluation;

3. Determination of the potential for flooding on the subject property; and

4. Copy of the municipal property tax card for all OWTS Applications for Alterations to a Structure and OWTS Applications for Repair.

D. Applications for Repair - Applications for repair shall at a minimum include information specified on the Department's "OWTS Repair Submission Requirements" document (this document can be found at: http://www.dem.ri.gov/programs/benviron/water/permits/isds/pdfs/rprcklst.pdf).

E. Application for Transfer - Applications for transfer of an approved OWTS application shall include the items listed below.

1. New OWTS application form signed by the new owner;

2. Copy of the current valid approval; and

3. Proof of ownership of the property served by the proposed OWTS.

6.20 Applications Involving the DEM Freshwater Wetlands Program and the Coastal Resources Management Council

A. Applications Involving the DEM Freshwater Wetlands Program

1. All applications pursuant to these rules associated with a construction project which may affect a freshwater wetlands regulated by the Department shall be submitted in accordance with §§ 6.20(A)(1)(a), (b), or (c) of this Part:

   a. The OWTS application may be accompanied by the appropriate determination or permit required by the DEM Freshwater Wetlands Program. Accordingly, where an applicant proposes to construct OWTS, the applicant must apply for and receive the appropriate determination or permit from the Freshwater Wetlands Program prior to submission to the OWTS Program;

   b. The applicant may submit applications to the Freshwater Wetlands Program and the OWTS Program at the same time. No OWTS Application for a construction project which may affect a freshwater wetlands will be approved without the appropriate determination or permit from the Freshwater Wetlands Program; or

   c. For Applications for New Building Construction or Applications for Alteration to a Structure on a single family house lot in proximity to DEM's Freshwater wetlands permitting jurisdiction, the applicant may submit a joint OWTS/Freshwater Wetlands application on a form approved by the Director for this purpose. Approval of a joint OWTS/Freshwater Wetlands application will be held to satisfy both sets of regulations and include conditions as may be needed. Permits issued under this process may not be renewed.

2. If the Department determines that there is a reasonable doubt as to the location of a freshwater wetlands boundary or applicability of the DEM Rules and Regulations Governing the Administration and Enforcement of the Freshwater Wetlands Act to a proposed new construction or new installation of an OWTS, the Department may require that the applicant obtain a separate determination or permit from the Department pursuant to said Wetlands regulations.

3. Erosion and sedimentation controls shall be designed, shown on plans, installed, operated and maintained to protect any wetland or watercourse from potential adverse effects of the construction project associated with an approved OWTS application.

B. Applications Involving the Rhode Island Coastal Resources Management Council

1. The Rhode Island Coastal Resources Management Council has authority over construction proposed in certain coastal regions of the State. The coastal region includes: All coastal features and all land within two hundred (200) feet of tidal waters, salt water ponds, salt water marshes, salt water wetlands or other land subject to Coastal Resources Management Council jurisdiction. Review of impacts to "freshwater wetlands in the vicinity of the coast" is under the sole jurisdiction of the Coastal Resources Management Council in accordance with the "Rules and Regulations Governing the Protection and Management of Freshwater Wetlands in the Vicinity of the Coast."

2. The Director reserves the right to request the applicant to obtain a Preliminary Determination from the Rhode Island Coastal Resources Management Council. The applicant is required to obtain a Preliminary Determination from the Coastal Resources Management Council prior to submitting any OWTS Application that includes a variance request pursuant to § 6.51 of this Part for OWTS located within two hundred (200) feet of the inland edge of the coastal shoreline feature bordering a tidal water area (corresponding to the jurisdiction of the Rhode Island Coastal Resources Management Council). For OWTS Applications for New Building Construction and OWTS Applications for Alteration to a Structure proposing an OWTS that has a design flow greater than two thousand (2,000) gallons per day for any single system or design flow greater than two thousand (2,000) gallons per day for any combination of systems owned or controlled by a common owner, applicants must receive a Preliminary Determination from the Coastal Resources Management Council before submitting an application for an OWTS to the DEM unless the OWTS Application provides sufficient information to determine the location of the coastal shoreline feature. After receiving a permit for an OWTS from the Director, the applicant should consult with the Coastal Resources Management Council before undertaking any construction on the property. It is the applicant's responsibility to obtain a Coastal Resources Management Council permit if necessary.

6.21 Subdivisions

A. Administrative

1. No person shall begin construction in any subdivision requiring a Subdivision Site Suitability Certification in accordance with this rule until the Director has approved such certification.

2. Any subdivision of five (5) lots or less that does not have frontage on an existing road and all subdivisions of six (6) lots or more shall apply for a Subdivision Site Suitability Certification in accordance with § 6.21(B) of this Part.

3. Subdivisions of five (5) lots or less that have frontage on an existing road have the option to apply for a Subdivision Site Suitability Certification pursuant to § 6.21(B) of this Part or submit OWTS applications for individual lots in accordance with § 6.18 of this Part. If applications for individual lots are submitted, the submittal shall be in accordance with the following:

   a. The applications must be submitted together;

   b. Each application shall clearly state that the lot is part of a subdivision of five (5) lots or less with existing road frontage; and

   c. Each lot must meet all requirements of these rules in order for an OWTS permit to be issued by the Department for any of the lots.

4. Subdivision Soil Evaluation - A soil evaluation shall be conducted for each lot in accordance with § 6.16 of this Part. Soil evaluations for subdivisions are exempt from the requirement in § 6.16(I)(1) of this Part that the test holes be within twenty-five (25) feet of the proposed leachfield, unless the Director determines that soil conditions justify that the test holes must be placed within twenty-five (25) feet of the proposed leachfield. Soil evaluations must be accepted by the Director prior to submission of an application for Subdivision Site Suitability Certification.

5. An approved Subdivision Site Suitability Certification shall not operate as an approval for the construction of any OWTS as required by § 6.18 of this Part.

6. Land within the original property boundaries that is designated for future development will not be part of the review for Subdivision Site Suitability Certification. However, it must be shown that one (1) unit can be built on the land designated for future development.

7. OWTSs installed without State approval, OWTSs installed prior to April 9, 1968 and cesspools on existing lots in a proposed subdivision shall be upgraded to the current standards, to the extent possible, in accordance with these rules as part of a Subdivision Site Suitability Certification within one (1) year of the recording of the subdivision.

8. The applicant for a Subdivision Site Suitability Certification must demonstrate that the OWTS for the proposed use on each proposed lot in a subdivision meets all the requirements of these rules in order for a Subdivision Site Suitability Certification to be issued by the Department.

9. Nothing in this § 6.21 of this Part shall prevent the Director from requesting any or all of the procedures established in these rules for a single lot if the Director determines it is necessary for the protection of the public health and environment.

10. Easement Filing - Where subdivision lots will require filling beyond lot lines, an easement for that human transported material must be submitted with the application for the individual lots.

B. Subdivision Site Suitability Certification - Application for Subdivision Site Suitability Certification shall be prepared by a Class II or Class III Licensed Designer, as appropriate, on forms approved by the Director and shall include the information in § 6.21(B)(1) through (5) of this Part and any other information the Director may require. The application for Subdivision Site Suitability Certification will be reviewed for all information necessary to determine the suitability of a parcel of land to be divided as shown on the application.

1. Location Map - A location map or sketch showing existing highways, streets and/or other identifiable landmarks or distances thereto, shall be furnished to facilitate an inspection of the site. This may be incorporated on the topographic map.

2. Soil Survey - A copy of the page or pages of the latest Soil Survey published by the Natural Resource Conservation Service of the U.S. Department of Agriculture illustrating the location of the subdivision.

3. Topographic Map

a. The topographic map shall show ground elevations on the tract as follows:

(1) For land that slopes less than approximately two (2) percent, show spot elevations at all breaks in grade, along all drainage channels or swales, and at selected points not more than one hundred (100) feet apart in all directions; and

(2) For land that slopes more than approximately two (2) percent show broken line contours with an interval of not more than two (2) feet.

b. The datum on which the elevations or contours are based shall be reported including a permanent reference benchmark. Where cut or fill of more than one (1) foot can be anticipated and estimated, it should be indicated by solid line contours showing approximate finished grade. Plan and profile showing existing and proposed finished grades of proposed roads must be provided.

c. The topographic map shall show the following for the entire area of the subdivision:

(1) Proposed house locations;

(2) Existing structures, public and private water supplies and OWTSs;

(3) Rights of way or easements;

(4) Watercourses, drainageways, and drainage basins;

(5) Rock outcrops and wooded areas;

(6) Stone walls;

(7) Location of proposed water supplies and OWTSs on lots within the subdivision conforming with requirements of § 6.23 of this Part;

(8) Location of test holes used for the soil evaluation; and

(9) Location of any critical resource area as defined in § 6.42 of this Part within the property.

4. For lands immediately adjacent to the subdivision, the items below shall be shown, designated or reported. Distances below shall be determined from the subdivision property boundary.

a. Watercourses within two hundred (200) feet;

b. Private drinking water wells (existing and those proposed on an approved OWTS permit) within two hundred (200) feet;

c. Public wells (existing and proposed) approved by the Rhode Island Department of Health within five hundred (500) feet; and

d. Location of any existing OWTS or drain within one hundred (100) feet of the property.

5. Water Quality Assessment - Where in the opinion of the Director, a substantial question exists regarding the cumulative impact of the operation of OWTSs within the subdivision on surface water or groundwater quality, the Director may require an assessment of such potential cumulative impacts, including appropriate studies, to be submitted by the applicant. This assessment may include, but not be limited to, a determination of whether the operation of the OWTSs will result in a loss of a use or violation of a surface water or groundwater quality standard assigned to that body of groundwater or surface water in question as designated by the Department.

6. Certification - The Subdivision Site Suitability Certification shall be accompanied by a certification, on a form approved by the Director, that the work was conducted in a manner consistent with these rules and that it is an accurate portrayal of site conditions. If more than one individual licensed under these rules participated in the development of the subdivision site suitability report, the report must specify who prepared which part and include a certification from each licensee.

C. Expiration of Subdivision Site Suitability Certification-

1. Except for permits eligible for tolling pursuant to R.I. Gen. Laws § 42-17.1-2.5 as provided in § 6.21(C)(2) of this Part, a Subdivision Site Suitability Certification shall expire five (5) years from the date of issuance unless the subdivision has been platted or recorded as evidenced by the submission of a copy of the recorded subdivision plat map. After expiration, certification may be obtained only by reapplying under the rules in effect at the time of re-application. Once a subdivision has been platted or recorded, no further certification shall be required and all lots may proceed with the application process for their OWTS in accordance with these rules.

a. In the event that there is any change in the configuration of any lot or road depicted in an approved Subdivision Site Suitability Certification, the applicant shall submit revised subdivision layout plans to the Department for its review. If the changes to the subdivision are found to be substantial, the Director may order the applicant to apply for a new Subdivision Site Suitability Certification based on the new plans.

b. Whenever the configuration of any lot or road in a subdivision depicted in an approved Subdivision Site Suitability Certification is altered so as to affect twenty-five percent (25%) or more of the original lots, a new Application for Subdivision Site Suitability Certification shall be submitted.

2. Subdivision Site Suitability Certifications that were valid on, or issued after November 9, 2009 that are subject to tolling pursuant to R.I. Gen. Laws § 42-17.1-2.5 shall be tolled for the period provided by R.I. Gen. Laws § 42-17.1-2.5 and expire on the date five (5) years after approval plus the tolling period in accordance with said statute, unless the subdivision has been platted or recorded as evidenced by the submission of a copy of the recorded subdivision plat map.

6.22 Wastewater Flow

A. Determination of Wastewater Flow

1. An OWTS must be designed to dispose of the estimated maximum daily flow from the building(s) it serves. The maximum daily flow is estimated by multiplying flow per unit from § 6.22(B) of this Part by the maximum design capacity of the building. For facilities with more than one use listed in § 6.22(B) (e.g., a retail store with a restaurant), the maximum daily flow for the facility shall be the total of the flows from the separate uses using § 6.22(B). The employee contribution to the design flow shall be included for non-residential uses other than restaurants by estimating the maximum number of employees who may be present during a single day of operation multiplied by a design flow of 15 gallons per person per day.

2. For establishments not listed in § 6.22(B) of this Part, the maximum daily flow shall be determined by either of the following:

   a. Two (2) times the average daily meter reading taken from a minimum of two (2) comparable establishments for one (1) month during the period of the year that represents the greatest water use for the establishment; or

   b. If six (6) months of daily meter readings are available for a minimum of two (2) comparable establishments that includes the period of the year that represents the greatest water use for the establishment, the OWTS shall be designed using the highest daily flow without the use of a peaking factor.

B. Wastewater Design Flows

TYPE OF USE	UNIT	GALLONS PER DAY
RESIDENTIAL [Minimum design flow for residential use shall be three hundred forty-five (345) gallons per day (three (3) bedrooms), unless otherwise permitted in accordance with § 6.22(D) of this Part.]		
Single family residence	per bedroom (2 persons per bedroom)	115
Multiple family residence	per bedroom (2 persons per bedroom)	115
INSTITUTIONAL		
Assisted living facility	per bedroom (2 persons per bedroom)	115
Church	per seat	1
Church hall (fellowship hall)	per seat	5
Hospital	per bed	150
Library	per visitor	5
Nursing home/rest home	per bed	125
Group home	per bed	200
Correctional, rehabilitation facility	per bed	100
Gymnasium	per seat	3
Gymnasium	per participant	15
Highway rest stop	per person	5
Public park with toilets	per person	5
add for showers	per person	10

CAMPS AND CAMPGROUNDS		
Day camp	per person	15
add for mess hall	per person/meal	3
Camp - overnight	per person	25
add for mess hall	per person/meal	3
Campground with washroom and toilets	per site	50
Recreational vehicle park with water service	per site	100
Add for central dining facilities	per seat	35
Recreational vehicle park without water service	per site	50
Add for central dining facilities	per seat	35
Add for central washroom and toilet facilities	per site	50
SCHOOLS		
School	per person	10
add for cafeteria	per person	5
add for gymnasium and showers	per person	10
Boarding school, college	per person	50
Day care center	per person	10
RESTAURANTS [Minimum design flow for restaurants shall be 500 gallons per day.]		

Restaurant	per seat	40
Restaurant – with single-service articles		
with public restrooms	per seat	25
without public restrooms	per seat	20
add for drive-up window		500
Lounge, bar (no food service at that seat)	per seat	10
Banquet hall	per seat	5
Ice cream parlor, take out service only	per store	500
COMMERCIAL [Minimum design flow for commercial use shall be 100 gallons per day]		
Auto service station	per pump	25
	per repair bay	100
Barber shop/Beauty salon	per chair	50
add for sink	per hair care sink	200
Bed & Breakfast	per bedroom	110
Bowling alley	per alley	100
Catering kitchen, no food service on-site	per meal prepared	3
Country club		
dining room	per seat	40

snack bar/lounge	per seat	20
lockers and showers	per locker	20
Doctors /Chiropractor/ Therapist office	per doctor/chiropractor/therapist	250
Dog/Pet grooming	per station	500
Dentist office	per chair	200
Drive-in theater	per vehicle stall	5
Factory/Industrial plant	per person	15
add for cafeteria	per person	5
Food store < 5,000 square feet (See Note 1)	per store	350
add for deli flow	per store	100
add for bakery flow	per store	100
add for meat dept. flow	per store	150
add for fish market flow	per store	150
add for public restrooms	per store	200
Food store > 5,000 square feet (See Note 1)	per store	700
add	per square foot>5,000 sq ft	0.05
add for deli flow	per store	200
add for bakery flow	per store	200

add for meat dept. flow	per store	300
add for fish market flow	per store	300
add for public restrooms	per store	400
Funeral home	per parlor	500
Hotel, motel	per unit	100
With efficiency units	per unit	150
Health club	per participant	15
Kennel	per kennel	10
Marina (shore-side facilities)	per slip	10
add for showers	per slip	10
Mobile home park/Manufactured home park	per site	230
Office building	per employee	15
Retail store	per employee	15
Rooming house/Boarding house	per bedroom	80
Self-Service Laundry (See Note 2)	per machine	500
Shopping center/Strip mall/Multi-use retail Calculate on the largest of either: a) the total flow for the uses within as determined from this table, or	per square foot	0.1

b) per square foot		
Skating rink	per seat	3
Swimming pool	per person	15
Tennis court - outdoor	per court	100
Tennis court - indoor	per court	400
Theater, auditorium	per seat	3
Veterinary office	per veterinarian	200

Notes:

(1) The design flow for a standalone deli, bakery, meat store or fish market will be three hundred fifty (350) gallons per day if the facility is less than five thousand (5,000) square feet or seven hundred (700) gallons per day if the facility is five thousand (5,000) square feet or more.

(2) Self-Service laundry OWTS designs must include pretreatment to remove lint from the wastewater.

C. Determining the Number of Bedrooms in a Single Family Residential Dwelling - For purposes of aiding the planning, designing, building, renovation, remodeling or expansion of residential dwellings, the following guidelines shall be used in determining the number of bedrooms. These guidelines are presented in acknowledgement that, in many cases, houses contain rooms meeting the strict definition of bedroom as defined in these rules, but which are not intended to be nor will be used as bedrooms.

1. No residence served by an OWTS shall be allowed to have more bedrooms than is permitted under the Department issued permit for the OWTS serving the dwelling. A dwelling exceeding the number of bedrooms provided for in the permit shall be in violation of these rules.

2. In determining the number of bedrooms contained in any residence, it shall be presumed that all residences contain a living room, a kitchen, a bathroom and at least one (1) bedroom.

3. For OWTSs installed without State approval, OWTSs installed prior to April 9, 1968 and cesspools, the determination on number of bedrooms shall be based on the consideration of municipal records, floor plans and the guidelines herein. In the case of a one (1) bedroom residence, the determination shall be based on municipal records.

4. When a determination of the number of bedrooms shall be based on total number of rooms, § 6.22(D) of this Part shall be used. Foyers, closets, bathrooms and rooms without windows are not counted as rooms in § 6.22(D). Functionally combined kitchens/dining rooms and living/dining rooms greater than three hundred (300) square feet shall be counted as two (2) rooms. § 6.22(D) of this Part may be used by applicants for any OWTS application to the Department.

D. Determination of Number of Bedrooms

Total Number of Rooms	Assumed Number of Bedrooms
5 or less	2
6-7	3
8-10	4
11-12	5
13 or more	6

The Director may permit the filing of a deed restriction by which an applicant may self-restrict the use of a residence to one less bedroom than may be determined in accordance with § 6.22(D) of this Part. In no case shall the deed restriction be for less than two bedrooms. The Director may consider the gross square footage of a residence as a factor against granting a bedroom restriction by deed.

E. Separate OWTSs- Where residential uses need to install separate OWTSs, the following proportions of the total flow shall be used unless there is definite data available as to the exact distribution of flow: blackwater forty percent (40%) and graywater sixty percent (60%). If a separate system is used for laundry wastes, it shall be designed on twenty percent (20%) of the total flow.

F. Misrepresented Applications - An OWTS Application that has been approved but later shown to contain faulty or misrepresented information shall not, in and of itself, be used to determine the number of bedrooms in a residential dwelling or the design flow for a non-residential structure.

6.23 Minimum Setback Distances

A. The horizontal distances between the parts of an OWTS and the items listed in § 6.23(B) through (E) of this Part shall not be less than those shown. Where a proposed OWTS cannot meet the horizontal distances in § 6.23(B) through (E) of this Part a variance request shall be required pursuant to § 6.51 of this Part unless the setback reduction is specifically allowed in Notes accompanying each Table.

B. Minimum Setback Distances – General

	Building Sewer, Grease Tank, Distribution Box, Pump Tank, Septic Tank, Septic Tank Effluent Pipe (ft) (Note 12)		Leachfield (ft) (Note 12)	
Well Serving Non-potable Uses (Note 13)	25		50	
Water Supply Line	10 (Note 1)		25	
Property Line	10 (Note 2)		Design Flow (gpd)	(ft)
			0-2000	10
			>2000-5000 Note (3)	50
			> 5000 Note (4)	min. 50 (Note 5)
Foundation	5 (Not applicable to building sewer)		25 (Note 6)	
Subsurface drains, foundation drains , or storm drains (see also §§ 6.23(C) and (D) of this Part): -- Upgradient and side gradient of the OWTS: -- Downgradient of the OWTS:	15 (Note 7) 25 (Note 7)		25 (Note 8) 50 (Note 9)	
Edge of any land at a level lower than the invert of the distribution line	10		10	
Stormwater Infiltration System	25 (Note 10)		25 (Note 10)	
Swimming Pools: In-ground: Above ground:	10 10		25 10	
	Design Flow <5000 gpd	Design Flow ≥5000 gpd (Note 4)	Design Flow <5000 gpd	Design Flow ≥5000 gpd (Note 4)
Coastal Shoreline Feature (Note 11) not in a Critical Resource Area, Flowing Water (Rivers and Streams), Open Bodies of Water (Lakes and Ponds), Other Watercourses Not Mentioned Above, and Any Stormwater Management Structure That Potentially Intercepts Groundwater	25	50	50	100

Notes: The reductions in setback distances allowed below in Notes (1) through (13) will not be granted if the setback distances in § 6.23(B) of this Part can be met. A variance request pursuant to § 6.51 of this Part shall not be required for the reductions indicated below.

(1) The distance between the building sewer or septic tank effluent pipe and a water supply line may be reduced and the lines may cross provided that either the building sewer or septic tank effluent pipe or water supply line is sleeved whenever the lines are within ten (10) feet of each other. The sleeve shall be seamless or schedule 40 PVC or equivalent with watertight joints and it shall have a watertight seal that is fastened to the pipes with a stainless steel retractable clamp. Whenever possible, the building sewer and septic tank effluent pipe should be laid below water supply lines at crossings. Pressurized building sewers or pressurized septic tank effluent pipes shall be laid below water supply lines at crossings. If the setbacks to a water supply line for a public water system cannot be met, the applicant must obtain, and submit to the Department, written permission from the water supplier.

(2) Not applicable to building sewer and septic tank effluent pipe. Setback distance of 10' applies for all OWTS components not specifically listed.

(3) Any single leachfield designed to treat more than two thousand (2,000) but less than five thousand (5,000) gallons per day.

(4) As defined in § 6.39(A)(1) of this Part.

(5) Distance shown is the minimum for upgradient and side gradient directions. Downgradient separation distance will be based on nitrate modeling undertaken pursuant to § 6.39 of this Part and shall be a minimum of fifty (50) feet.

(6) Distance may be reduced to fifteen (15) feet with no foundation drain. Full foundation details must be shown on the plan. Distance may be reduced to eight (8) feet where a foundation slab elevation, pile foundation, or the basement floor elevation is higher than the invert of the distribution lines in the leachfield.

(7) The distance between the building sewer or septic tank effluent pipe and a drain may be reduced and the building sewer or effluent pipe may cross the drain provided that the building sewer or septic tank effluent pipe is sleeved whenever they are within twenty-five (25) feet of the drain. The sleeve shall be seamless or schedule 40 PVC or equivalent with watertight joints, and it shall have a watertight seal that is fastened to the pipes with a stainless steel retractable clamp.

(8) If the slope of the original land surface over the area of the leachfield and fifty (50) feet in all directions from the edge of the leachfield is less than three (3) percent, the minimum setback distance between the leachfield and the drain must be fifty (50) feet in all directions. If the applicant conducts a groundwater flow study that conclusively demonstrates the drain is upgradient of the leachfield, the Director may allow a twenty-five (25) foot separation distance on the upgradient and side gradient side.

(9) If a drain is watertight and bedded in sand or bank run gravel, or laid at an elevation above the seasonal high groundwater table, this setback distance may be reduced to twenty-five (25) feet. Applications shall include a detail drawing of the drain pipe joints and bedding material.

(10) On a residential property with both an OWTS and a stormwater infiltration system, the distance between any OWTS component and the stormwater infiltration system may be reduced to fifteen (15) feet if the stormwater infiltration system has been designed in accordance with the Rhode Island Stormwater Design and Installation Standards Manual.

(11) The minimum setback distance from the inland edge of the coastal shoreline feature of the ocean or Narragansett Bay is either fifty (50) feet or twenty-five (25) feet plus the CRMC calculated shoreline change setback pursuant to 650-RICR-20-00-1.1.9, whichever is greater. Shoreline change rates and maps are available on CRMC's web site. This setback distance is doubled for OWTSs with design flow greater than five thousand (5,000) gallons per day.

(12) The distance between the septic tank and the edge of the leachfield shall be a minimum of ten (10) feet.

(13) The minimum setback from a geothermal well and its associated piping shall be twenty-five (25) feet.

C. Minimum Setback Distances from Drinking Water Supply Watershed Critical Resource Area Features (distances in feet from all OWTS components). See also § 6.60 of this Part, Figure 2. If it is shown to the Department's satisfaction by clear and convincing evidence that the feature of concern in this table is upgradient (for both groundwater and surface water flow) of the OWTS, the minimum setback distance will be determined from § 6.23(B) of this Part. Subsurface drains to lower the seasonal high groundwater table are not permitted in accordance with § 6.44(B) of this Part.

Feature	**OWTS Design Flow < 5000 gpd**	**OWTS Design Flow ≥5000 gpd** (Note 1)
Impoundment with Intake for Drinking Water Supply and Adjacent Wetlands (Note 2)	200	400
Subsurface Drains and Foundation Drains that Discharge Directly to the Impoundment	200	400
Subsurface Drains and Foundation Drains that Discharge to a Drainage Swale that Subsequently Discharges to the Impoundment: Paved Swale Unpaved Swale <200 feet long Unpaved Swale ≥200 feet long	 200 200 100	 400 400 200
Tributaries, Tributary Wetlands, Swales, and Storm Drains that Discharge Directly to the Impoundment	100 (Note 3)	200 (Note 3)
Subsurface Drains, Foundation Drains, and Storm Drains that Discharge to Tributaries and Tributary Wetlands	100 (Note 3)	200 (Note 3)
Any other Watercourse in the Drinking Water Supply Watershed (Not Connected to the Impoundment) or Areas Subject to Storm Flowage	50	100

Notes: The reductions in setback distances allowed below in Note (3) will not be granted if the setback distances in § 6.23(C) of this Part can be met. A variance request pursuant to § 6.51 of this Part shall not be required for the reductions indicated below.

(1) As defined in § 6.39(A)(1) of this Part.

(2) Distances measured from the yearly high water mark.

(3) The distance between the building sewer or septic tank effluent pipe and a drain may be reduced and the building sewer or effluent pipe may cross the drain provided that the building sewer or septic tank effluent pipe is sleeved whenever they are within twenty-five (25) feet of the drain. The sleeve shall be seamless or schedule 40 PVC or equivalent with watertight joints, and it shall have a watertight seal that is fastened to the pipes with a stainless steel retractable clamp.

D. Minimum Setback Distances from Features in the Salt Pond and Narrow River Critical Resource Area (distances in feet from all OWTS components). See also § 6.61 of this Part, Figure 3. If it is shown to the Department's satisfaction by clear and convincing evidence that the feature of concern in this table is upgradient (for both groundwater and surface water flow) of the OWTS, the minimum setback distance will be determined from § 6.23(B) of this Part. Applications for an OWTS permit that are approved by DEM are subject to the requirements of CRMC.

Feature	**OWTS Design Flow < 5000 gpd**	**OWTS Design Flow ≥5000 gpd** (Note 1)
Salt Pond/Narrow River Coastal Shoreline Features, excluding the ocean	200	400
Subsurface Drains and Foundation Drains that Discharge Directly to the Salt Pond/Narrow River	200	400
Subsurface Drains and Foundation Drains that Discharge to an open Drainage Swale that Subsequently Discharges to the Salt Pond/Narrow River:		
Paved Swale	200	400
Unpaved Swale <200 feet long	200	400
Unpaved Swale ≥200 feet long	150	300
Tributaries, Tributary Wetlands, Swales, and Storm Drains that Discharge Directly to the Salt Pond/Narrow River	150 (Note 2)	300 (Note 2)
Subsurface Drains, Foundation Drains, and Storm Drains that Discharge to Tributaries and Tributary Wetlands	150	300
Any Other Watercourse in Salt Pond/Narrow River Critical Resource Area (Not Connected to Salt Pond/Narrow River), Areas Subject to Storm Flowage, or the inland edge of the coastal shoreline feature of the ocean. (Note 3)	50	100

Notes: The reductions in setback distances allowed below in Note (2) will not be granted if the setback distances in § 6.23(D) of this Part can be met. A variance request pursuant to § 6.51 of this Part shall not be required for the reductions indicated below.

(1) As defined in § 6.39(A)(1) of this Part.

(2) The distance between the building sewer or septic tank effluent pipe and a drain may be reduced and the building sewer or effluent pipe may cross the drain provided that the building sewer or septic tank effluent pipe is sleeved whenever they are within twenty-five (25) feet of the drain. The sleeve shall be seamless or schedule 40 PVC or equivalent with watertight joints, and it shall have a watertight seal that is fastened to the pipes with a stainless steel retractable clamp.

(3) The minimum setback distance from the inland edge of the coastal shoreline feature of the ocean is either fifty (50) feet or twenty-five (25) feet plus the CRMC calculated shoreline change setback pursuant to 650-RICR-20-00-1.1.9, whichever is greater. Shoreline change rates and maps are available on CRMC's web site. This minimum setback distance is doubled for OWTSs with design flow greater than five thousand (5,000) gallons per day.

E. Minimum Setback Distances from Drinking Water Wells

OWTS Design Flow (gpd)	Distance in Feet from Leachfield/Septic Tank Effluent Pipe, Tanks/Building Sewer(Notes 1,5)	Distance in Feet From All OWTS Components (Notes 1,5)	
	Private Drinking Water Well (Note 2)	Public Well – Drilled (rock), Driven, or Dug	Public Well- Gravel Packed, Gravel Developed
<1000	100/75/50 (Note 3,4)	200	400
1000-<2000	150/75/50	200	400
2000 - <5000	200/75/50	200	400
5000- <10000	300/75/50	300	400
≥10000	400/75/50	400	400

Notes: The reductions in setback distances allowed below in Notes (2) and (3) will not be granted if the setback distances in § 6.23(E) of this Part can be met. A variance request pursuant to § 6.51 of this Part shall not be required for the reductions indicated below.

(1) Large Systems - These distances are minimum distances for large systems as defined in § 6.39(A)(1) of this Part. Greater distances may be required based on the Impact Analysis in § 6.39(C) of this Part.

(2) Distance from the building sewer may be reduced when the building sewer is constructed of Schedule 40 PVC or equivalent.

(3) The minimum setback distances to wells on the subject property may be reduced to 80/60/40 (leachfield/tank/building sewer) feet for residential OWTSs on lots ten-thousand (10,000) square feet and larger under the following conditions:

(A) The design flow is less than five hundred (500) gallons per day;

(B) The OWTS utilizes a Department-approved nitrogen reducing technology;

(C) The OWTS discharges to a pressurized shallow narrow drainfield designed in accordance with § 6.37(D) of this Part ; and

(D) The OWTS separation distance between the infiltration surface and groundwater is three (3) feet or greater.

(4) The minimum setback distances shall be increased to 150/75/50 (leachfield/tank/building sewer) for OWTSs with a design flow of less than one thousand (1,000) gallons per day if the OWTS is designed for Category 1 soils per § 6.33 of this Part. For such OWTSs utilizing a Department approved nitrogen reducing technology discharging to a bottomless sand filter or pressurized shallow narrow drainfield constructed in accordance with § 6.37(D) of this Part , the minimum setback distances may be 100/75/50 (leachfield/tank/building sewer).

(5) In addition to the required setbacks between wells and the proposed OWTS, well setbacks shall also apply between any existing well serving the building for which the OWTS is proposed and any other existing OWTS. Such existing OWTS may require upgrade to meet these rules.

6.24 Subsurface Drains

A. Prior to seeking a permit for an OWTS that includes a subsurface drain, the applicant shall have all other relevant state or local approvals or permits for construction of the subdrain and discharge of the drainage effluent. Such approvals may include, but are not limited to, DEM Wetlands Program, the Rhode Island Coastal Resources Management Council Preliminary Determination, the municipality or the Rhode Island Department of Transportation.

B. Construction - A subsurface drain constructed to lower the groundwater table shall consist of not less than six (6) inches of washed stone three-quarter (¾) inch to two (2) inches in diameter, over which is laid a perforated pipe at least four (4) inches in diameter. The stone shall extend above the pipe to within two (2) feet of the ground surface. A layer of filter fabric meeting the requirements of § 6.33(L) of this Part shall be placed above, below and along the sides of the stone for the entire length of the drain. Changes in direction shall not exceed ninety (90) degrees. Where a change in direction is greater than forty-five (45) degrees, a manhole is required, unless the change in direction is achieved through the use of a thirty-six (36) inch radius sweep.

C. Monitoring - The effectiveness of subsurface drains used to lower the groundwater table must be demonstrated through one complete wet season, January 1 through April 15, before consideration can be given to an application for an OWTS permit. The Department may allow lesser periods of monitoring if site conditions and wet season conditions warrant.

1. Groundwater table test holes shall be located within the area of the proposed leachfield with one (1) on the upgradient side and one (1) on the downgradient side. The test holes shall not be located within twenty-five (25) feet of the upgradient subsurface drain or within fifty (50) feet of the downgradient subsurface drain.

2. Groundwater table initial readings shall be submitted on forms approved by the Director by January 30 in order to effectively allow the Department and the Licensed Designer to monitor the effects of the subsurface drain through the wet season.

D. Hydraulic Gradient - If the subsurface drain causes the natural hydraulic gradient to be reversed, such drain shall be treated as a downgradient drain for the purpose of establishing appropriate minimum setbacks in accordance with § 6.23 of this Part. Where only an upgradient drain is installed, the applicant must demonstrate that the hydraulic gradient will not be reversed or treat the upgradient drain as a downgradient drain for the purpose of establishing appropriate minimum setbacks in accordance with § 6.23 of this Part.

6.25 Building Sewers

A. Size - The building sewer shall be designed with a capacity, when running full, of not less than twice the peak rate of flow of the connected fixtures. In no case shall the building sewer be less than three (3) inches in diameter.

B. Material - The building sewer shall be constructed of PVC pipe SDR 35 minimum or equivalent. When any portion of the building sewer will be subject to vehicular traffic, it shall be constructed of Schedule 40 PVC or equivalent.

C. Joints - All pipe joints for the building sewer shall be made watertight and be firmly connected.

D. Base - The building sewer shall be laid on a compacted, firm base.

E. Horizontal Alignment

1. The building sewer should be laid in a straight line wherever possible. Changes in direction shall not exceed ninety (90) degrees.

2. Where a change in direction is greater than forty-five (45) degrees, a manhole is required, unless the change in direction is achieved through the use of a thirty-six (36) inch radius sweep.

F. Vertical Alignment

1. The slope of the building sewer from the dwelling to the septic tank shall be not less than one percent (1%) and not greater than five percent (5%).

2. A manhole is required at changes of grade requiring a drop box in order to maintain the maximum five percent (5%) slope.

G. Manholes and Cleanouts - A manhole with a removable cover of concrete, cast iron, or other durable material shall be provided at the junction of two (2) or more building sewer lines and at all sharp changes in direction greater than forty-five (45) degrees, unless the alignment complies with § 6.25(F) of this Part. A cleanout shall be provided at intervals not greater than seventy-five (75) feet.

H. Ventilation - The building sewer shall be vented through the stack or main vent of the building it serves. No trap shall be installed in the building sewer.

6.26 Grease Tanks

A. See § 6.62 of this Part, Figure 4.

B. Required Use - Grease tanks shall be installed in accordance with the following:

1. OWTS Applications for New Building Construction for restaurants and other facilities that prepare food shall have kitchen wastes separately plumbed to an external grease tank;

2. OWTS Applications for Alterations to a Structure and OWTS Applications for Repair for restaurants and other facilities that prepare food with a total design flow equal to or exceeding two thousand (2,000) gallons per day shall have kitchen wastes separately plumbed to an external grease tank; and

3. OWTS Applications for Alterations to a Structure and OWTS Applications for Repair for restaurants and other facilities that prepare food with a total design flow less than two thousand (2,000) gallons per day shall have kitchen wastes separately plumbed to an external grease tank or have an internal grease removal unit installed.

C. Capacity - Grease tanks shall have a minimum capacity of one thousand (1,000) gallons, and shall have sufficient capacity to provide at least a twenty-four (24) hour detention period for fifty percent (50%) of the design flow for the OWTS.

D. Construction - Grease tanks shall be watertight, meet the construction and material standards required for septic tanks in § 6.27(C) of this Part, and be shaped as required for septic tanks in § 6.27(D) of this Part.

E. Inlet and Outlet - The inlet and outlet shall be as required for septic tanks in § 6.27(F) of this Part. Grease tanks shall be provided with inlet tees and outlet tees. Baffles may be provided as necessary in conjunction with tees to maximize the separation of grease from the wastewater.

1. Tees shall be minimum SDR 35 PVC solvent welded and properly supported by a hanger, strap or other device.

2. The inlet tee shall extend to the mid-depth of the tank. The outlet tee shall extend to twelve (12) inches from the bottom of the tank.

3. The tops of the tees shall extend a minimum of six (6) inches above the flow line, and shall be left open to provide ventilation. There shall be an air space of at least three (3) inches between the tops of the tees and the top interior of the grease tank.

F. Access Openings - Grease tank access openings shall be as required for septic tanks in § 6.27(H) of this Part. In addition, the lid shall specify that it is for a grease tank.

G. Location - Grease tanks shall be installed on a separate building sewer serving that part of the plumbing system into which the grease shall be discharged. The discharge from the grease tank shall flow to a properly designed septic tank.

H. Installation - Grease tank installation shall be as required for septic tank installation in § 6.27(J) of this Part.

I. Grease Tanks in Series - Grease tanks may be placed in series provided that the combined volume meets the requirements of § 6.26(C) of this Part and that each grease tank meets all other requirements of § 6.26 of this Part. In no case shall more than two (2) grease tanks be placed in series.

J. Performance Testing - Grease tanks shall be certified watertight in accordance with § 6.27(L) of this Part.

K. Maintenance - Grease tanks shall be cleaned by a licensed permitted septage hauler when twenty-five percent (25%) of the liquid volume is filled with grease.

L. Existing Grease Tanks - Grease tanks in place as of January 1, 2008 that have access openings to finished grade shall be in compliance with § 6.27(H)(2) of this Part no later than January 1, 2013.

6.27 Septic Tanks

A. See §6.63 of this Part, Figure 5.

B. Septic Tank Capacity

1. Residential Dwellings - The required minimum liquid capacity of a septic tank, below the flow line, shall be based on the number of bedrooms in the dwelling. For three (3) bedrooms or less the minimum capacity shall be one thousand (1,000) gallons. For each additional bedroom, add two hundred fifty (250) gallons. A garbage grinder or a one hundred (100) gallon or greater tub will each require the septic tank capacity be increased by two hundred fifty (250) gallons.

2. Non-Residential Buildings - The required minimum liquid capacity of the septic tank shall be one thousand (1,000) gallons or two (2) times the design flow as determined from § 6.22(B) of this Part, whichever is greater.

C. Construction and Materials - Septic tanks shall be watertight. They shall be constructed of sound and durable materials not subject to excessive corrosion, decay or frost damage or to cracking or buckling due to settlement or soil pressures. Septic tanks shall be constructed of precast reinforced concrete, fiberglass, polyethylene or other material approved by the Director. In addition to the construction and material standards in § 6.27(C)(1) through (3) of this Part, all septic tanks shall meet the physical design standards in the remainder of § 6.27 of this Part.

1. Precast reinforced concrete septic tanks shall conform to the American Society for Testing and Materials "Standard Specification for Precast Concrete Septic Tanks C-1227-10a" and any updates thereto, incorporated above at § 6.7(A) of this Part. Any weep holes in the precast reinforced concrete septic tank shall be placed on the side of the tank bottom to allow for safe inspection and assurance that the weep hole has been plugged.

2. Fiberglass septic tanks and polyethylene septic tanks shall conform to the International Association of Plumbing and Mechanical Officials "American National Standard for Prefabricated Septic Tanks IAPMO/ANSI Z1000-2007" and any updates thereto, incorporated above at § 6.7(B) of this Part.

3. Each septic tank shall be clearly and permanently marked at the inlet end of the tank with:

   a. Date of manufacture;

   b. Name or trademark of the manufacturer;

   c. Septic tank capacity; and

   d. Indication of external loads for which the septic tank is designed to resist.

D. Shape - There shall be no less than twenty-five (25) square feet of surface liquid area. The distance between the inlet wall of the tank and the outlet wall shall be no less than six (6) feet. The depth of the tank below the flow line shall be not less than thirty-nine (39) inches or more than eight (8) feet. There shall be at least nine (9) inches of air space between the surface of the liquid and the interior roof of the septic tank.

E. Compartments - All septic tanks shall have two (2) compartments with adequate connection at mid-depth, and all tanks shall meet the following requirements:

1. The first compartment shall have a liquid volume of approximately two-thirds (⅔) of the required liquid volume for the entire tank.

2. The interior compartment wall shall not extend to the interior roof without providing for venting equivalent to the cross sectional area of at least a four (4) inch diameter pipe.

F. Inlet and Outlet

1. One (1) inlet and one (1) outlet shall be provided through the appropriate end or side wall of each tank. Where more than one (1) inlet is required for multiple building sewers, the tank shall be manufactured with the appropriate number of inlets.

2. Inlet and Outlet Elevations - The invert elevation of the outlet shall be at least three (3) inches below the invert elevation of the inlet, and above the seasonal high groundwater table, unless special construction approved by the Director is provided.

3. The inlet and outlet pipes shall be connected to the tank with a watertight sealed flexible joint. The pipe gasket shall be an integral part of all tanks and the pipe gasket shall be fastened to the pipe with a stainless steel retractable clamp.

G. Inlet and Outlet Tees - Septic tanks shall be provided with an inlet sanitary tee and outlet tees or other non-corroding equivalent device approved by the Director. The inlet and outlet tees shall be minimum SDR 35 PVC solvent welded. The tops of the tees shall extend a minimum of six (6) inches above the flow line, and shall be left open to provide ventilation. There shall be an air space of at least three (3) inches between the tops of the tees and the top interior of the tank.

1. The inlet sanitary tee shall extend downward at least one (1) foot below the flow line.

2. The outlet tee shall extend downward one-third (⅓) of the depth below the flow line. All outlet tees or other approved outlet devices shall be equipped with an effluent screen approved by the Department pursuant to § 6.41 of this Part.

3. Specifications for inlet tees and outlet tees are for normal, low-flow conditions. High-flow conditions, created when liquid is pumped from another tank, may require other dimensions and considerations.

H. Access Openings - A minimum twenty (20) inch inside diameter access opening shall be located over both the inlet tee and outlet tee. All septic tank openings shall meet the following requirements:

1. The access opening over the outlet tee shall be brought to finished grade. Other access openings shall either be brought to finished grade or within twelve (12) inches of the finished grade. Where a riser is required, it shall be watertight;

2. Lids on the top of the septic tank (§ 6.64 of this Part, Figure 6) should remain in place where practical. Lids for the openings at finished grade shall prevent unauthorized entry by meeting either of the following:

a. Lid shall weigh a minimum of fifty-nine (59) pounds and fit tightly onto the riser as shown in § 6.64 of this Part, Figure 6; or

b. Lid shall be tamper resistant and mechanically fastened;

3. The septic tank manufacturers shall provide and the Licensed OWTS Installers shall attach a label of noncorrosive material in a prominent location at each access opening to warn that "Entrance Into the Tank Could Be Fatal"; and

4. Surface water shall be diverted away from the septic tank openings.

I. Accessibility - Septic tanks shall be so located on the lot as to be accessible for servicing and cleaning.

J. Installation - All septic tanks shall be installed in accordance with the manufacturer's minimum requirements. In addition, all septic tanks must meet the installation requirements specified in the remainder of these rules.

1. Foundation - The septic tank shall be installed on a level, stable base that will not settle.

2. Backfill - Backfill shall be placed around the septic tank in such a manner as to avoid damage to it. All backfill placed around the septic tank shall be free of large stones, stumps, waste, construction material and rubbish.

3. Floatation - Where any portion of a septic tank is installed below the seasonal high groundwater table, the tank's susceptibility to floatation shall be determined, and provisions shall be made to prevent floatation where necessary as determined by the floatation calculations.

4. Septic Tanks in Coastal Velocity Zones - All fiberglass and polyethylene septic tanks larger than one thousand (1,000) gallons installed in a Federal Emergency Management Agency designated V-Zone shall be anchored to prevent floatation.

K. Septic Tanks in Series - Septic tanks placed in series are allowed provided they meet the following requirements:

1. Each tank shall be of single compartment design and the volume of the first tank shall be at least two-thirds (⅔) the required tank size;

2. The outlet tee on the first tank shall extend down to the mid-depth of the liquid volume; and

3. An effluent screen that meets the requirements of § 6.27(G)(2) of this Part shall be provided on the outlet tee of the second tank.

L. Performance Testing - All septic tanks and their risers must be certified watertight by the manufacturer or by onsite testing. Onsite testing for septic tank leakage shall be conducted for tanks assembled at the installation site. The Director may require onsite testing on a case-by-case basis. The testing shall be conducted using either:

1. Vacuum Test - Seal the empty tank and risers and apply a vacuum to two (2) inches (50 mm) of mercury. The tank is approved if ninety percent (90%) of the vacuum is held for two (2) minutes; or

2. Water-Pressure Test - Seal the tank and risers, fill with water to the top of the risers, and let stand for twenty-four (24) hours. Refill the tank. The tank is approved if the water level is held for one (1) hour.

M. Pumping to Septic Tanks - Whenever more than twenty-five percent (25%) of the daily design flow is pumped into a septic tank, the tank capacity shall be increased by fifty percent (50%) beyond the minimum capacities specified in § 6.27(B) of this Part.

N. Depth of Cover - The minimum cover over the invert of the outlet shall be one and one-half (1½) feet. If the depth of cover exceeds three and one-half (3½) feet, the OWTS application shall include documentation of the tank's ability to structurally withstand the loading, and the tank's design shall allow for proper maintenance and access.

O. Existing Septic Tanks - Septic tanks in place as of January 1, 2008 shall be in compliance with the provisions of § 6.27(H)(2) of this Part no later than January 1, 2013.

6.28 Septic Tank Effluent Pipe

A. Size - In no case shall the septic tank effluent pipe be less than four (4) inches in diameter.

B. Material - The septic tank effluent pipe shall be constructed of PVC pipe SDR 35 minimum or equivalent. When any portion of the septic tank effluent pipe will be subject to vehicular traffic, it shall be constructed of Schedule 40 PVC or equivalent.

C. Joints - All pipe joints for the septic tank effluent pipe shall be made watertight and be firmly connected.

D. Slope or Grade - The septic tank effluent pipe shall have a minimum slope of one percent (1%).

E. Base - The septic tank effluent pipe shall be laid on a compacted, firm base.

F. Alignment - The septic tank effluent pipe should be laid in a straight line wherever possible. Changes in direction shall not exceed ninety (90) degrees. Where a change in direction is greater than forty-five (45) degrees, a manhole is required, unless the change in direction is achieved through the use of a thirty-six (36) inch radius sweep.

G. Manholes and Cleanouts - A manhole with a removable cover of concrete, cast iron, or other durable material shall be provided at the junction of two (2) or more septic tank effluent pipes and at all sharp changes in direction greater than forty-five (45) degrees, unless the alignment complies with § 6.28(F) of this Part. A cleanout shall be provided at intervals not greater than seventy-five (75) feet.

H. Pressurized Septic Tank Effluent Pipe - The Licensed Designer shall specify pressurized septic tank effluent pipe sizing and provide backup calculations to support specification. The pressurized septic tank effluent pipe shall be PVC Class 200 minimum.

6.29 Holding Tanks

A. Use

1. Holding tanks for wastewater are prohibited for Applications for New Building Construction and Applications for Alteration to a Structure.

2. A holding tank may be allowed only to repair or replace a failed OWTS at the Director's discretion.

3. Holding tanks will not be allowed if a public wastewater system is available for connection. When a public wastewater system becomes available, any person owning a holding tank shall connect to said system within thirty (30) days and the holding tank shall be abandoned in accordance with § 6.56 of this Part.

4. Holding tanks are allowed at marine pumpout facilities provided that direct connection to an existing public wastewater system is not possible and such tanks are constructed, installed and operated in accordance with appropriate Department Guidelines and Regulations.

B. Construction - Each holding tank shall:

1. Have a minimum capacity of five hundred percent (500%) of the daily design flow or portion thereof that the holding tank will serve, or two thousand (2,000) gallons, whichever is larger;

2. Be watertight and meet the construction and material standards required for septic tanks in § 6.27(C) of this Part;

3. Be equipped with an audio-visual alarm set to activate when the tank reaches sixty percent (60%) of its capacity;

4. Have a minimum twenty (20) inch inside diameter opening that meets the requirements for septic tank access openings in §§ 6.27(H)(1), 6.27(H)(2)(b), 6.27(H)(3) and 6.27(H)(4) of this Part; and

5. Be vented such that the vent is at an elevation higher than the elevation of the highest fixture served.

C. Installation - Holding tank installation shall be as required for septic tanks in § 6.27(J) of this Part.

D. Depth of Cover - The minimum cover over the invert of the inlet shall be one and one-half (1½) feet.

E. Pumping - Prior to approval of the installation of a holding tank the applicant shall provide to the Department a copy of a contract with a licensed permitted septage transporter to regularly pump the tank.

F. Performance Testing - All holding tanks shall be tested on site for leakage in the manner specified for septic tanks in § 6.27(L)(1) or (2) of this Part.

G. Existing Holding Tanks - Holding tanks in place as of January 1, 2008 that have access openings to finished grade shall be in compliance with § 6.27(H)(2)(b) of this Part no later than January 1, 2013.

6.30 Pump Tanks

A. An OWTS that requires a pump shall have a separate pump tank to house the pump, unless the pump is placed in the second compartment of the septic tank within a screened vault approved by the Director. Pump tanks shall be located following a septic tank unless otherwise approved by the Director.

B. Capacity - Pump tanks shall have an emergency storage capacity above the working level equal to the daily design flow of the system. Emergency capacity is not required if there is less than two (2) inches difference in elevation between the invert of the outlet of the septic tank and the invert of the inlet of the pump tank. All pump tanks shall be equipped with sensors and alarms to protect against high water due to failure of the pump or pump controls. The volume below the working level shall include an allowance for the volume of all drainage which may flow back to the tank when pumping has ceased. The volume of the pump tank between operating levels shall be adequate to assure the entire leachfield is dosed each cycle in accordance with the required number of cycles per day.

C. Construction - Each pump tank shall:

1. Be watertight and meet the construction and material standards for septic tanks in § 6.27(C) of this Part; and

2. Each pump tank or compartment thereof shall be provided with a minimum twenty (20) inch inside diameter access opening located so as to facilitate repair or adjustment of the pump. The access opening shall meet the requirements for septic tank access openings in § 6.27(H)(1) through (4) of this Part.

D. Inlet and Outlet - The invert elevation of the inlet and the outlet pipe to the pump tank shall be located above the maximum water elevation in the pump tank, and above the seasonal high groundwater table, unless special construction, approved by the Director is provided.

E. Ventilation - Pump tanks shall be constructed in a manner that will permit venting through the building sewer or other suitable outlet.

F. Installation - Pump tank installation shall be as required for septic tanks in § 6.27(J) of this Part.

G. Performance Testing - Pump tanks shall be certified watertight in accordance with § 6.27(L) of this Part.

H. Existing Pump Tanks - Pump tanks in place as of January 1, 2008 that have access openings to finished grade shall be in compliance with § 6.27(H)(2) of this Part no later than January 1, 2013.

6.31 Pumps

A. Required Use - Pumps are required for OWTSs that meet any of the following conditions:

1. The OWTS is designed for intermittent discharge;

2. The OWTS is designed for pressure dosing;

3. Pump is required for an approved Alternative or Experimental Technology;

4. The maximum length of a dispersal trench in the leachfield is between seventy-six (76) feet and one hundred (100) feet; or

5. The total length of the distribution lines in the leachfield exceeds five hundred (500) feet.

B. Dual Alternating Pumps

1. When a pump is required, dual alternating pumps are required for the following (otherwise a single pump is sufficient):

a. The total length of the distribution lines in the system exceeds one thousand (1,000) feet;

b. The OWTS serves a use other than single family residential, the design flow is less than two thousand (2,000) gallons per day, and there is no storage capacity for one day's design flow; and

c. The OWTS serves a use other than single family residential and the design flow is greater than two thousand (2,000) gallons per day.

2. Dual alternating pumps shall operate in the following sequence: pumps off; primary (lead) pump on; backup (lag) pump on and alarm on; pumps must alternate.

3. When dual alternating pumps are discharging to separate leachfields, the pump discharge lines shall be inter-connected and provisions made to permit dosage of both leachfields with one pump when the other is being serviced.

C. Size - The pump must be sized to accommodate the proposed use. All system head curves and associated calculations shall be submitted with the design. Centrifugal pumps must be capable of passing three-quarter (¾) inch diameter solids.

D. Piping - The Licensed Designer shall specify pump discharge pipe sizing and provide backup calculations to support specification. The pump discharge pipe shall be PVC Class 200 minimum.

E. Controls and Power Supply - Pump controls shall be moisture proof if located above the liquid level. Watertight controls shall be used when the contents are submerged. All controls and junction boxes on the power supply shall meet appropriate electrical codes. Standby power shall be provided at all uses other than single family residential, unless otherwise approved by the Director.

F. Alarms - All pumps shall be equipped with a high water level, visible and audible alarm powered by a circuit separate from the pump power.

G. Installation - Pumps shall be installed in strict conformance with the manufacturer's specifications. Provisions should be made to easily remove the pumps for servicing.

6.32 Distribution Boxes

A. A distribution box shall be installed immediately preceding the leachfield unless otherwise approved by the Director.

B. Construction - The distribution box shall be constructed of concrete or other durable material. It shall have a top load carrying capacity of three hundred (300) pounds per square foot and minimal sidewall deflection. Minimum bottom area shall be three (3) square feet.

C. Inlet - The distribution box shall be provided with an inlet tee or a suitable baffle. The invert elevation of the inlet pipe shall be not less than two (2) inches above the invert elevation of the outlet pipe.

D. Outlets

1. Outlet Elevations - The invert elevation of all the outlet pipes shall be a minimum of four (4) inches above the floor of the distribution box. All outlet inverts shall be at the same elevation.

2. Number of Outlets - There shall be a separate outlet for each distribution line. In all cases following a pump tank, the outlets shall be of sufficient size to accept the wastewater flow at the rate wastewater is delivered to the distribution box.

E. Distribution Pipes Into the Distribution Box

1. The distribution pipes shall extend into the distribution box one (1) inch.

2. Jointing of the distribution piping with a distribution box shall be made with non-shrinking gasket materials which shall maintain a watertight seal.

3. All inverts shall be set level after the leachfield is installed. Leveling devices may be installed on the distribution pipes.

F. Cover - The distribution box shall be provided with a readily removable, fitted cover of durable material. Distribution boxes are not required to have access openings at finished grade except as follows. When a tipping distribution box is used, the distribution boxes shall have a minimum ten (10) inch diameter access opening brought to finished grade. OWTSs with a design flow over two thousand (2,000) gallons per day shall have a minimum eighteen (18) inch manhole over each distribution box with extra heavy duty metal frames and covers to finished grade. When manholes to grade are not provided, it is recommended that a marker over the cover be provided at grade.

G. Foundation - The distribution box shall be installed on a level stable base that will not settle.

6.33 Leachfields

A. Applicability - This rule applies to leachfields with dispersal trenches (§ 6.34 of this Part), leachfields with concrete chambers in a trench configuration (§ 6.35 of this Part), and to Alternative or Experimental leachfield systems approved pursuant to § 6.41 of this Part except for specifically approved design elements that are not consistent with this § 6.33 of this Part.

B. Minimum Leaching Area - The minimum leachfield area necessary for dispersal trench and concrete chamber leachfields shall be determined by dividing the maximum daily wastewater flow (design flow) for the facility, as determined from § 6.22 of this Part, by the loading rate established in § 6.33(C) of this Part. Use the lowest loading rate obtained in the manner described below:

1. If the bottom of the stone is above the original grade, use the soil horizon with the lowest loading rate within five (5) feet of the original ground surface, excluding any A horizons;

2. If the bottom of the stone is below the original grade, use the soil horizon with the lowest loading rate within five (5) feet below the elevation of the distribution pipe invert, including the soil horizons receiving side wall effluent;

3. If no natural soil exists within the five (5) feet referenced in § 6.33(B)(1) and (2) of this Part above because of gravel fill, use the loading rate of the first naturally occurring soil horizon below that depth.

C. Loading Rates Determined by Soil Category

Soil Category	**Loading Rate (gals/sq ft/day)**
1 (Note 1)	.70
1m (Note 2)	.61
2	.61
3	*.70*
4	*.61*
4m	*.70*
5	.52
6	.61
6m	.70
7	.52
7m	.61
8	.46
8m	.48
9	.40
9m	.43
10	Not Allowed (Impervious)

Notes:
(1) For OWTS Applications for Repair, a loading rate of .93 may be used for Soil Category 1.
(2) "m" Means soil has gravelly or channery coarse fragment modifiers.

D. Effective Leaching Area - The effective leaching area of OWTSs shall be determined in accordance with § 6.34 of this Part for dispersal trench OWTSs and § 6.35 of this Part for concrete chamber OWTSs.

E. Depth to Groundwater from Original Ground Surface - Using the test holes required in § 6.16(I) of this Part, the seasonal high groundwater table determination that is closest to the original ground surface shall be used for OWTS design. The leachfield shall be located in an area where the seasonal high groundwater table is a minimum of two (2) feet below the original ground surface. All test holes within twenty-five (25) feet of the leachfield shall meet the minimum depth to groundwater from original ground surface. Where the seasonal high groundwater table is less than four (4) feet below the original ground surface, the Department shall require additional soil testing to ensure the minimum depth to groundwater meets the minimum standards within twenty-five (25) feet of the leachfield. On lots twenty thousand (20,000) square feet or larger that are not located in the Salt Pond or Narrow River Critical Resource Areas as defined in § 6.42 of this Part, the leachfield may be located in an area where the seasonal high groundwater table is less than twenty-four (24) inches but greater than or equal to eighteen (18) inches from the original ground surface if the OWTS utilizes a bottomless sand filter in accordance § 6.37 of this Part, the applicant has no variance requests pursuant to § 6.51 of this Part, and the design flow is less than or equal to six hundred ninety (690) gallons per day of residential strength wastewater.

F. Depth to Restrictive Layer or Bedrock from Original Ground Surface - The leachfield shall be located in an area where a restrictive layer or bedrock is a minimum of four (4) feet below the original ground surface. The minimum depth to a restrictive layer or bedrock shall be met within twenty-five (25) feet of all sides of the leachfield.

G. Leachfield Design Point - Where the seasonal high groundwater table is greater than or equal to four (4) feet below the original ground surface, the leachfield shall be designed using the original ground surface elevation at the center of the leachfield. Where the seasonal high groundwater table is less than four (4) feet below the original ground surface, the leachfield shall be designed using the highest original ground surface elevation within the leachfield.

H. OWTS Separation Distance to Groundwater - The bottom of the stone underlying the leachfield (or surface upon which the biomat develops) shall be at least three (3) feet above the seasonal high groundwater table.

I. OWTS Separation Distance to a Restrictive Layer or Bedrock - The bottom of the stone underlying the leachfield (or surface upon which the biomat develops) shall be at least five (5) feet above a restrictive layer or bedrock. This five (5) foot vertical separation shall be maintained to a distance of twenty-five (25) feet from the side wall of the leachfield. In the upgradient direction, the five (5) foot vertical separation requirement may be waived as long as a restrictive layer or bedrock is no higher than the bottom of the stone within twenty-five (25) feet of the leachfield (§ 6.59 of this Part, Figure 1). Excavating into a restrictive layer or bedrock is not permitted unless otherwise approved by the Director.

J. Excavation - All trees, brush and stumps within the area of the leachfield and within ten (10) feet of the leachfield shall be removed. Care must be taken to assure that the soil at the bottom and sides of the excavation for the leachfield is not compacted or smeared. The bottom of the excavation shall be level and the bottom and sides of the excavation shall be scarified. In no case shall exposed boulders in the walls or bottom of the excavation be left in place. Voids created by the removal of boulders shall be filled with gravel meeting the requirements in § 6.33(M) of this Part. Exposed roots within the excavation shall be cut back to the walls of the excavation. No part of the excavation for the leachfield shall be into groundwater. All storm deposited sand in the backdune environment and human transported material existing in the proposed leachfield and five (5) feet around and below shall be removed prior to OWTS installation unless the material is deemed to be acceptable to the Director.

K. Stone - The stone used in the leachfield shall consist of clean, washed stone ranging from three quarter (¾) inch to not more than two (2) inches in size and free of fines, soils, stone dust or debris. The stone shall be covered with a layer of synthetic filter fabric that meets the requirements of § 6.33(L) of this Part.

L. Filter Fabric - A layer of non-woven synthetic filter fabric shall be placed over all stone used in the OWTS construction before backfilling. The filter fabric shall have adequate tensile strength to prevent ripping during installation and backfilling, adequate air permeability to allow free passage of gases, and adequate particle retention to prevent downward migration of soil particles.

M. Gravel

1. The gravel base material and, where applicable, the gravel between the trenches shall consist of clean sand and gravel free of organic matter and foreign substances. The gravel shall not contain any material larger than three (3) inches and up to ten percent (10%) may be sized between three-quarters (¾) and three (3) inches. Gravel shall meet the following criteria:

Sieve Size	Percent Passing
3/4”	90% - 100%
#4	55% - 100%
#10	40% - 100%
#40	10% - 50%
#100	0% - 20%
#200	0% - 5%

2. The gravel shall be placed in shallow lifts and properly compacted. The surface of the gravel upon which the stone will be laid shall be level and scarified.

N. Depth of Cover - The minimum cover over the invert of the distribution lines shall be one and one-half (1½) feet and the maximum cover shall be two and one-half (2½) feet. Minimum cover elevations shall be maintained over the full area of the leachfield, including area excavated pursuant to § 6.34(F)(1) of this Part.

O. Backfill - All backfill shall be free of boulders and stones greater than six (6) inches in diameter, frozen clumps of earth, rubbish, masonry, stumps or waste construction materials. Backfill shall be placed carefully to avoid displacement and damage to piping and chambers. Heavy machinery shall not be permitted to pass over the leachfield.

P. Fill Easements - Where human transported material (“fill”) is required and where it is necessary to fill beyond the boundary of the subject property to meet the requirements of these rules, no approval will be granted unless the adjoining property owner(s) has given a permanent legal release (easement, etc.) filed in the land evidence records of the municipality granting such right to the owner of the applicant property. A copy of such right of access and use shall be attached to the application.

Q. Adjacent Side Slope - A minimum ten (10) foot horizontal separation distance shall be provided between the outer edge of the stone in the outer dispersal trench and any ground surface elevation less than the elevation of the invert of the distribution line. The adjacent side slope shall not be steeper than 3:1 (horizontal: vertical) for a twenty-five (25) foot minimum distance from the edge of the stone in the dispersal trench or until the toe of the slope returns to the elevation of the original grade. The toe of the 3:1 slope shall be a minimum of five (5) feet from any property line.

R. Structural Retaining Walls - A minimum of twenty-five (25) feet shall be maintained from the outer edge of the stone in the outer dispersal trench to any structural retaining wall. If the structural retaining wall is above the seasonal high groundwater table a lesser setback distance may be allowed. A greater setback distance may be required for OWTSs with a design flow of one thousand (1,000) gallons per day or more. The Department may require additional information, including but not limited to an analysis of the hydrogeological conditions of the site. Structural retaining walls shall be a minimum of two (2) feet from the property line unless the adjacent property owner grants the applicant written permission or a construction easement to provide access to install the wall. The wall design shall ensure adequate control of surface water runoff. The Director may require that the structural retaining wall be designed by a Professional Engineer registered in Rhode Island.

S. Surface Water Drainage - OWTSs shall be designed to prevent the flow of surface water from the surrounding area onto the leachfield. The OWTS design shall provide for diversion of surface water runoff so as not to cause or increase the severity of drainage problems to adjacent properties.

T. Leachfield Protection

1. Curbing - OWTSs serving other than individual dwellings shall be adequately curbed or fenced so as to exclude vehicular traffic, unless the OWTS is a concrete chamber OWTS constructed in accordance with § 6.35(L) of this Part. Parking areas adjacent to a leachfield shall be graded or curbed to divert runoff from the leaching area.

2. The boundary of the leachfield shall be staked and flagged to protect the leachfield from vehicle traffic and excessive weight loads before and during construction of the OWTS and the structure. Flagging shall remain in place until all construction activities at the site are complete.

U. Finish Grade Stabilization - Immediately after completion of final grading, the area of disturbance due to installation of the OWTS shall be stabilized by mulching and seeding, or sodding, to establish a permanent vegetative cover to prevent erosion.

6.34 Dispersal Trenches

A. Effective Leaching Area - The effective leaching area shall be determined by the depth of stone meeting the requirements of § 6.33(K) of this Part that is placed below the distribution line in the trench and the width of the trench. The effective leaching area of dispersal trenches containing one-half (½) feet of stone below the pipe invert shall be the total bottom area. Credit will be allowed for added sidewall absorption area gained by increasing the depth of stone in the trenches. Such credit shall be determined in accordance with § 6.34(B) of this Part which gives the square footage allowed per lineal foot of trench as the depth of stone increases. The maximum depth of stone allowed is one and one-half (1½) feet. The bottom of the dispersal trench shall have a maximum width of three (3) feet. The maximum depth of stone below the pipe invert shall be one-half (½) feet when either of the following occur:

1. The seasonal high groundwater table is within two (2) to four (4) feet of the original ground surface; or

2. A restrictive layer is within four (4) to six (6) feet of original ground surface.

B. Effective Leaching Area

Depth of Stone Below Invert (Feet)	Area Allowed per Linear Foot of Trench (Sq. ft/ft)		
	24” Wide Trench	30” Wide Trench	36” Wide Trench
0.5	2.0	2.5	3.0
1.0	2.7	3.2	3.7
1.5	3.2	3.7	4.2

C. Distribution Lines

1. That portion of the distribution line from the distribution box to the beginning of the dispersal trench shall be a minimum of two (2) feet in length, four (4) inch diameter SDR 35 PVC, imperforated and laid with firmly connected watertight joints.

2. The invert of the distribution lines in the trench shall be two (2) inches lower than the invert of the outlet of the distribution box. The distribution lines in the trench shall be level. The first foot of the distribution line in the trench shall be imperforated SDR 35 PVC. Beyond the first foot, the distribution lines in the trench must consist of SDR 35 perforated PVC pipe with a minimum diameter of four (4) inches, or an equivalent pipe approved by the Director. The perforations shall be evenly spaced in two (2) rows, one on each side of center, located at thirty (30) degrees off vertical center in the lower half of the pipe. The perforations shall be no smaller than three-eighths (⅜) inch and no larger than five-eighths (⅝) inch in diameter. Pipe joints shall be firmly connected. The ends of all distribution lines shall be inter-connected.

3. The maximum length of a dispersal trench shall be as follows:

   a. Without dosing – fifty (50) feet;

   b. With a tipping distribution box – seventy-five (75) feet; or

   c. With a pump – one hundred (100) feet.

D. Stone - The stone surrounding the distribution lines shall meet the requirements of § 6.33(K) of this Part. The stone shall cover the full width of the trench, extend to the proper design depth, and extend two (2) inches above the top of the distribution lines. The stone shall be covered with a layer of synthetic filter fabric that meets the requirements of § 6.33(L) of this Part.

E. Leachfield Construction Where the Invert of the Distribution Lines is Below Original Grade. (See § 6.65 of this Part, Figure 7)

1. The soil between the dispersal trenches shall remain undisturbed.

2. The Director may approve designs where the soil within the entire area of the leachfield is removed if the applicant shows that trench excavation is impractical, for example due to the presence of excessive boulders or stumps. If any B horizon soil remains, only tracked vehicles shall be allowed within this area to avoid compacting the soil. If the soil within the entire area of the leachfield is removed, the soil shall be replaced with properly compacted gravel meeting the requirements of § 6.33(M) of this Part to an elevation that will be two (2) inches above the top of the distribution lines. The trenches shall be excavated out of the compacted gravel.

3. A six (6) inch layer of gravel meeting the requirements of § 6.33(M) of this Part shall be placed below the stone in the dispersal trench. Where the bottom of the stone lies on or within a soil horizon that meets the description of Soil Category 1 from § 6.16(K) of this Part and such horizon is at least six (6) inches thick below the stone, the six (6) inch gravel layer is not necessary. However, if this Soil Category 1 horizon is described as extremely cobbly, the six (6) inch gravel layer shall be required.

4. The minimum distance between walls of adjacent dispersal trenches shall be five (5) feet, however, greater distances are recommended.

F. Leachfield Construction Where the Invert of the Distribution Lines is Above Original Grade. (See § 6.66 of this Part, Figure 8)

1. The leachfield and five (5) feet beyond the leachfield shall be stripped of all topsoil (A horizons). In order to avoid compaction of the B soil horizon, only tracked vehicles shall be allowed within this area.

2. Properly compacted gravel that meets the requirements of § 6.33(M) of this Part shall be placed throughout the excavation to an elevation that will be two (2) inches above the top of the distribution lines. Dispersal trenches shall be excavated out of the compacted gravel. There shall be a minimum six (6) inch gravel base layer meeting the requirements of § 6.33(M) of this Part below the stone.

3. The maximum depth of stone below the distribution line invert shall be one-half (½) feet; and

4. The minimum distance between walls of adjacent dispersal trenches shall be ten (10) feet.

G. Leachfield Construction on Sloping Sites - Where the dispersal trenches are to be constructed such that the invert of the distribution lines in the trenches will not all be at the same elevation, the invert of the distribution lines shall be below the original grade, the distribution lines in the trenches shall be laid level, and the leachfield shall be constructed in accordance with the following (See § 6.67 of this Part, Figure 9):

1. The distribution box shall provide equal dosing to each dispersal trench;

2. A tipping distribution box or pump shall be used;

3. Leachfield trenches shall be parallel to the contours of the existing grade where possible;

4. The ends of the distribution lines shall be connected by a relief line that is imperforated, SDR 35 PVC laid with watertight joints that is of the same diameter as the perforated pipe that it connects;

5. The minimum distance between walls of adjacent dispersal trenches shall be ten (10) feet;

6. Gravel shall be placed below the stone in accordance with § 6.34(E)(3) of this Part;

7. Each dispersal trench must meet the adjacent side slope requirements of § 6.33(Q) of this Part;

8. The soil between the dispersal trenches shall remain undisturbed. If the presence of boulders or other obstacles make trench excavation impractical, the OWTS shall be constructed in accordance with § 6.34(E) or (F) of this Part; and

9. The Director may require that OWTSs with a design flow exceeding six hundred ninety (690) gallons per day submit additional information regarding wastewater loading and groundwater flow to ensure OWTS effectiveness on sloping sites.

H. Location Under Traffic Areas - The leachfield for a dispersal trench system shall not be paved or subject to vehicular traffic, including parking.

I. Summary of Dispersal Trench Construction Details:

Maximum length per line without dosing	50 feet
Maximum length per line with tipping distribution box	75 feet
Maximum length per line with pump	100 feet
Minimum diameter of distribution lines	4 inches
Maximum width of dispersal trench bottom	3 feet
Minimum distance between walls of adjacent trenches	5 feet/10 feet*
Minimum cover over invert of distribution lines	1.5 feet
Maximum cover over invert of distribution lines	2.5 feet

6.35 Concrete Chambers

A. See § 6.68 of this Part, Figure 10.

B. An OWTS using precast concrete chambers may be constructed in lieu of a dispersal trench OWTS. Concrete chambers must be preceded by a septic tank and must be installed in a trench configuration. Deep concrete chambers meeting the requirements of § 6.35(F) of this Part will not be permitted except for OWTS Applications for Repair when no other type of leachfield can be utilized.

C. Shallow Concrete Chambers

1. Dimensions - Shallow concrete chambers are four (4) feet by eight (8) feet by eighteen (18) inches deep with an open bottom and perforated side walls.

2. Site limitations - Shallow concrete chambers shall not be permitted where any of the following occur:

a. The chamber invert would be more than one (1) foot above the original grade;

b. The chamber inverts would be set at different elevations; or

c. The seasonal high groundwater table is less than four (4) feet from the original ground surface.

D. Shallow Concrete Chamber Effective Leaching Area - Effective leaching area for shallow concrete chambers shall be calculated based on § 6.35(E) of this Part. Required minimum leaching area shall be calculated in accordance with § 6.33(B) of this Part.

E. Shallow Concrete Chamber Effective Leaching Area

	Shallow Concrete Chambers	
	12” stone below	24” stone below (Note 1)
Each end unit (sq. ft.)	78	102
Each Interior Unit (sq. ft.)	64	80
Note 1: Shallow concrete chambers installed with twenty-four (24) inches of stone below the chamber may be used for OWTS Applications for Repair only.		

F. Deep Concrete Chambers

1. Dimensions - Deep concrete chambers are approximately equal in width and depth with an open bottom and perforated side walls.

2. Limitations - Deep concrete chambers are prohibited for OWTS Applications for New Building Construction and OWTS Applications for Alterations to a Structure. Deep concrete chambers will not be permitted for OWTS Applications for Repair where another type of leachfield designed in accordance with §§ 6.33, 6.34, and 6.35 of this Part can be sited and is deemed acceptable by the Department. The Licensed Designer must demonstrate that the repair alternatives to a deep concrete chamber, other than a bottomless sand filter or pressurized shallow narrow drainfield, are not feasible.

G. Deep Concrete Chamber Effective Leaching Area - Effective leaching area for deep concrete chambers shall be calculated based on § 6.35(H) of this Part. Required minimum leaching area shall be calculated in accordance with § 6.33(B) of this Part.

H. Deep Concrete Chamber Effective Leaching Area

	Deep Concrete Chambers
	12” stone on sides, 12” stone below
Each end unit (sq. ft.)	98
Each Interior Unit (sq. ft.)	58

I. Concrete Chamber Construction

1. Concrete chambers shall be constructed of precast concrete. The bottom of the chambers shall be open and the sides and end (end units) shall be perforated.

2. Access - The top of the chamber trench shall have an access opening into a chamber at intervals not greater than fifty (50) feet that consists of a removable cover of concrete, iron or other durable material. For OWTSs designed to dispose of up to two thousand (2,000) gallons per day and OWTSs that are not located under a paved area, the top of the access opening shall accommodate a riser and shall be brought to within one (1) foot of the finished grade and properly marked. For OWTSs designed to dispose of greater than two thousand (2,000) gallons per day, commercial OWTSs, and all OWTSs located under paved areas, the access openings shall meet the following requirements:

a. Access openings shall have a riser and shall be brought to finished grade;

b. Lids on the top of the concrete chambers should remain in place where practical. Lids for the openings at finished grade shall prevent unauthorized entry by meeting either of the following:

(1) Lids shall weigh a minimum of fifty-nine (59) pounds and fit tightly into the riser as shown in § 6.64 of this Part, Figure 6; or

(2) Lids shall be tamper resistant and mechanically fastened.

c. Surface water shall be diverted away from the access openings; and

d. Concrete chambers in place as of January 1, 2008 that have access openings to finished grade shall be in compliance with the provisions of § 6.35(H)(2)(b) of this Part no later than January 1, 2013.

J. Excavation and Construction of a Concrete Chamber Leachfield

1. The overall width of the trench must not exceed six (6) feet.

2. Spacing - The minimum distance between walls of adjacent trenches in a concrete chamber leachfield shall be at least six (6) feet.

3. The soil between the dispersal trenches shall remain undisturbed. The Director may approve designs where the soil within the entire area of the leachfield is removed if the applicant shows that trench excavation is impractical, for example due to the presence of excessive boulders or stumps. When the soil within the entire area of the leachfield is removed, the soil shall be replaced with properly compacted gravel meeting the requirements of § 6.33(M) of this Part to a depth that will be to the top of the chamber. The trench shall be excavated out of the compacted gravel.

4. A six (6) inch layer of gravel meeting the requirements of § 6.33(M) of this Part shall be placed below the stone in the trench. Where the bottom of the stone lies on or within a soil horizon that meets the description of Soil Category 1 from § 6.16(L) of this Part and such horizon is at least six (6) inches thick below the stone, the six (6) inch gravel base layer is not necessary. However, if this Soil Category 1 horizon is described as extremely cobbly, the six (6) inch gravel base layer shall be required.

5. Stone - Stone meeting the requirements of § 6.33(K) of this Part shall be placed beneath the chamber in accordance with § 6.35(E) or (H) of this Part. The space between the excavation and the chamber wall shall be twelve (12) inches and shall be backfilled with stone to the top of the chamber. The stone and the top of the chambers shall be covered with filter fabric that meets the requirements of § 6.33(K) of this Part.

K. Effluent Distribution

1. The invert of the inlet of the chamber shall be two (2) inches lower than the invert of the outlet of the distribution box.

2. The maximum length of a chamber trench shall be as follows:

   a. Without dosing – fifty (50) feet;

   b. With a tipping distribution box – seventy-five (75) feet; or

   c. With a pump – one hundred (100) feet.

3. Effluent shall be applied to the chamber trenches at least every twenty-five (25) feet.

4. For multiple trench concrete chamber leachfields, the ends of the chamber trenches shall be interconnected with imperforated SDR 35 PVC pipe laid with watertight joints. If the pipe will be subject to vehicular traffic, it shall be Schedule 40 PVC.

L. Location Under Traffic Areas - The area subject to vehicular traffic, including parking areas, shall be limited to twenty-five percent (25%) of the leachfield area. Where any portion of the leachfield is installed under an area subject to vehicular traffic, the structure must be capable of withstanding HS-20 wheel loads. All access manholes in areas subject to vehicular traffic shall be brought to grade with covers and frames capable of withstanding HS-20 wheel loads and meeting the requirements of § 6.35(I)(2)(a) through (d) of this Part. Such OWTSs must be vented with screened vents located in a protected area.

6.36 Pressurized Drainfields

A. General design parameters for all pressurized drainfields

1. All pressurized drainfields shall include timed-dosing, with the use of a control panel containing elapsed time meters and cycle counters for the pump(s) and alarm(s).

2. Setback to foundation and tanks: The minimum setback distance from the pressurized drainfield to any foundation shall be eight (8) feet, provided that the elevation of the basement slab in the dwelling is above the design seasonal high groundwater table (SHWT) depth and that there are no drains associated with the foundation. The minimum setback distance from the pressurized drainfield to any tank equal or larger than one thousand (1000) gallon capacity shall be four (4) feet.

3. Setback to structures impeding groundwater flow: The interior face of any structural or landscape retaining wall that may interfere with ground water flow, down-gradient from the pressurized drainfield, must be located at least twenty five (25) feet from the pressurized drainfield.

4. All setbacks and all other regulatory requirements contained in the Department Rules, that are not mentioned in §§ 6.36, 6.37, and 6.38 of this Part, shall be met.

5. Designs greater than nine hundred (900) gallons per day: Where design flows exceed nine hundred (900) gallons per day, the Department may require additional technical studies to ensure that the soil will accept and transmit effluent at the proposed loading rate without excessive mounding of ground water; seepage outbreak, such as at nearby cut slopes, toe slopes or property boundaries; adverse effects on the operation of the pressurized drainfield; or adverse effects on nearby ground water and surface water resources. The Department shall reserve the right to require additional supporting engineering calculations for the use of pressurized drainfields on design flows greater than two thousand (2000) gallons per day. The Department may require increased setbacks depending on the site specific conditions. In addition, commercial systems with high strength waste shall incorporate added treatment components to ensure treatment limits herein for BOD5, TSS and FOG are achieved prior to using a pressurized drainfield.

6. Pressurized drainfields must be designed by a Class II or III Licensed OWTS Designer unless the Department determines otherwise. No designer or installer shall undertake the design or installation of a pressurized drainfield pursuant to regulations unless he/she has received appropriate training by a vendor, professional organization, or institution recognized by the Department for this purpose. Any licensed designer or installer must document to the Department that applicable training has been completed. Class 1 designers can submit designs to the Department for low pressure pipe (LPP) that follow septic tank effluent only. Class 1 designers must document to the Department completion of training regarding pressurized dosing (selecting a pump for pressurized systems) that has been conducted by a professional organization, or institution recognized by the Department for this purpose.

7. Residual head: Designs should account for a minimum of two (2) feet of head (pressure) at the distal end of each distribution lateral.

8. Design maintenance notes: Designers should provide adequate notes on their plans to facilitate proper maintenance of all system components.

9. Drainfields at different elevations and zoned drainfields: Site conditions may not facilitate installing drainfield trenches or zones at the same elevation. In these situations, gate valves can be used to provide uniform wastewater distribution. Alternately, orifice plates may be used to help equalize flow to trenches that are not at the same elevation. Ball valves shall not be considered a suitable means for flow control. Access ports must be installed at the locations of all valves, lateral ends and orifice plates. Careful attention should be given to drainback when placing trenches or zones at different elevations since uneven drainback may overload zones or trenches. Types of drainfields that can be placed at different elevations shall conform with the Rules.

10. Sequencing valves: Access ports or manholes shall be required for sequencing valves and shall be sufficiently sized to facilitate maintenance.

B. Common components for all pressurized drainfields

1. General

a. All pressurized drainfields submitted under §§ 6.36, 6.37, and 6.38 of this Part shall use programmable timers.

b. All advanced treatment units to precede pressurized drainfields designed in accordance with §§ 6.36, 6.37, and 6.38 of this Part must fall within one of the following categories:

(1) Category 1 technologies: Advanced treatment units that are timed-dosed and have been classified by the Department as meeting effluent standards less than or equal to twenty (20) mg/L for both BOD5 and TSS; and FOG of less than or equal to five (5) mg/L (see § 6.69 of this Part, Figure 11).

(2) Category 2 technologies: Advanced treatment units that are not timed-dosed and have been classified by the Department to at least meet effluent standards of thirty (30) mg/L for both BOD5 and TSS; and FOG of less than or equal to five (5) mg/L (see § 6.70 of this Part, Figure 12).

2. Dosing Tank Specifications

a. A dosing tank must be provided following the advanced treatment step to provide wastewater storage and to house the pump discharge assembly. All dosing tanks used in a pressurized drainfield system must be watertight. All inlet and outlet pipes to concrete dosing tanks shall have flexible rubber seals secured by stainless steel bands. Watertight rubber grommets must be used at inlet and outlet pipes to plastic or fiberglass dosing tanks as well as on plastic manhole risers attached to concrete tanks.

b. Category 1 technology dosing tanks shall provide storage volume at least equal to the design volume dosed onto the pressurized drainfield during one pump run time. See §§ 6.71 and 6.72 of this Part, Figures 3 and 4.

c. A storage capacity must be provided in pressurized drainfield dosing tanks that follow Category 2 technologies or for septic tank effluent. The surge storage capacity shall be positioned between the elevation of the timer operating control switch and the high water alarm/peak enable control switch. The high water alarm shall be placed a minimum of two (2) inches below the invert of the inlet to the tank.

d. Dosing tanks following treatment units that are not timed-dosed shall be a minimum of four hundred fifty (450) gallons. For single family residential designs the required surge storage shall be seventy five (75) gallons per bedroom; for other designs the surge storage shall be calculated, at minimum, 50% of the daily design flow. See §§ 6.73, 6.74, and 6.75 of this Part, Figures 15, 16, and 17.

e. The pump servicing the pressurized drainfield shall be submerged completely at all times.

f. All manhole risers in the tanks/chambers serving the pressurized drainfield shall be watertight, and installed to finish grade with secure lids, in accordance with § 6.27(H)(2) of this Part.

3. Pump, Discharge Assembly and Transport Line Specifications

a. Pressure requirements: Pumps shall be sized to provide a minimum of two (2) feet and a maximum of seven (7) feet of head (i.e. pressure) at the distal end of each distribution lateral in the pressurized drainfield.

b. Wiring requirements: Pumps dosing pressurized drainfields following a non timed-dosed system shall be wired on the same electrical circuit as the advanced treatment unit.

c. Discharge assembly: The discharge assembly in the dosing tank shall be provided with a check valve; a mechanical disconnect from the pump to the discharge assembly, reachable within twelve (12) inches of the finish grade; and a valve to hydraulically separate the chamber from the pressurized drainfield. If the transport pipe needs to be drained after each pump event, a weep hole (3/16") shall be placed in a location within the discharge assembly that allows for drainback. Spray from the weep hole shall be directed away from sensors and controls (floats, transducers, etc.).

d. Anti-siphon devices and check valves: If the transport pipe slopes towards a pressurized drainfield having distribution piping at a lower elevation than the maximum water level in the dosing tank, an anti-siphon device shall be used on the pump discharge assembly, or at the highest point in the piping system from the tank to the distribution piping.

e. Shallow transport lines (above frost depth) shall drain after each dose or be insulated. If site conditions do not allow a transport line to drain, then a two (2)-foot minimum burial is required and a two inch (2") minimum thick by twenty four inch (24") wide expanded rigid polystyrene plastic insulation must be placed above the pipe.

f. Pump screen: All pumps following Category 2 technologies must have either a screened vault/basket or an in-line effluent filter. All pumps following a septic tank shall have an effluent screen. See §§ 6.73, 6.74, and 6.75 of this Part, Figures 15, 16, and 17.

g. Piping and fittings: All piping from the pump flange to the distal end of the drainfield lateral shall be pressure rated schedule (SCH) 40 polyvinyl chloride (PVC) or equivalent.

h. Excavation: Sagging in the transport line shall be prevented by either:

(1) Placing the transport line in an undisturbed trench bottom excavated to the specified grade; or

(2) Placing a layer of one inch (1") minus gravel, or three quarter inch (3/4") crushed stone, on the undisturbed trench bottom to bring it to specified grade.

i. Velocities within pipes: Liquids shall flow at a minimum velocity of two (2) feet per second and a maximum of eight (8) feet per second. These apply for discharge assemblies, transport pipes, manifolds and laterals.

4. Programmable Timer, Controls and Control Panels

a. Timer settings: The timer shall be programmed to provide several small doses of wastewater to the pressurized drainfield throughout a twenty four (24) hour clock time period.

(1) The system design shall be based on a minimum of one (1) dose per hour and, for typical single residential use, up to two (2) doses per hour.

(2) The designer or the authorized O&M service provider shall insure that the timer is field-set at the time of system start up.

(3) Two (2) to four (4) weeks after sufficient use of the system, the service provider shall ensure that the timer is reset, as needed, based upon actual flow through the system.

(4) Timer settings shall be checked at every established maintenance and inspection visit and when home occupancy changes and adjusted as needed.

b. Controls:

(1) Controls shall be in the form of signal rated floats, pressure transducers or other methods approved by the Department. A high water alarm and pump controls shall be included. A peak enable control shall be included either as part of the timed-dosed pretreatment system (Category 1 technology) or as part of the dosing tank for the pressurized drainfield served by a non timed-dosed pretreatment system or septic tank.

(2) The peak enable control shall engage the programmable timer into the peak enable mode in the event of timer malfunctions or temporary excessive water use. The peak enable mode in dosing tanks for the pressurized drainfield served by a non timed-dosed pretreatment system shall cut the “off” time of the pump to half its original setting to catch-up with excessive temporary flow. The pump “on” time shall stay the same during the peak enable mode to minimize saturated conditions in the drainfield.

(3) A low water/redundant off control is required for pump tank using timed dosed effluent to a pressurized drainfield (following Category 2 technologies or LPP receiving septic tank effluent).

c. Control panel:

(1) The control panel box must be placed outside on a suitable pedestal near the structure that it serves or be mounted on an outside wall of the structure. The panel box must be within view of the system location. The control panel shall be placed at a comfortable height for access.

(2) The control panel and junction boxes must, at minimum, meet the requirements for the NEMA 4X specifications in the National Electrical Manufacturers Association Standard 250-2014 "Enclosures for Electrical Equipment (1000 Volts Maximum)" incorporated above at § 6.7 (F) of this Part. The electrical conduit to and from the control panel must have NEMA approved expansion fittings and must also have appropriate seals to prevent gases and moisture from reaching the control panel or junction boxes.

(3) The control panel shall include a pump elapsed time meter ((ETM) to record total pump run time) and cycle event counters ((CC) recording events for each pump, peak enable counter, and alarm event). The ETM and CC shall be non-resettable.

C. Common Final Installation Steps for all Pressurized Drainfields

1. Head requirements: Immediately after any pressurized drainfield has been installed, the head or “squirt height” of the distribution laterals shall be determined, recorded in the maintenance record and left on site. When measuring the distal head, the measurement shall begin at the invert of the lateral.

2. Trees and shrubs: Trees and woody shrubs shall be kept a minimum distance of ten (10) feet from the pressurized drainfield.

D. Operation and Maintenance Requirements for all Pressurized Drainfields

1. General: An O&M agreement is required to be in place for the life of the system. The first O&M agreement of the system shall be recorded in the Land Evidence records of the pertinent City/Town.

2. Site Visits: At each of the operational and maintenance visits, readings from elapsed time meters, event counters, and water meters shall be recorded on the data cards.

3. Routine Periodic Maintenance

a. Laterals: An eight (8) foot long clear graduated PVC pipe shall be temporarily attached at the end of a lateral to measure residual head and compare with the pressurized drainfield start-up measurement. Increased residual head (distal head or squirt height) will signal orifice clogging and lateral cleaning must be performed. Decreased residual head might indicate pump wear, clogging or other problems in pipe(s) or screens needing service/cleaning.

b. All pressurized drainfields shall require lateral flushing / bottle brush treatment at least once a year.

c. Setback to brush/trees: Any brush or trees growing within ten (10) feet of the pressurized drainfield shall be removed.

d. All splice boxes shall be checked for moisture. If moisture is encountered in any splice box, the source shall be identified, corrections made (if needed), and splice box dried and secured before leaving the site.

e. To prevent contamination of the local water supply, the service provider must use his/her own hose with a backflow preventer.

f. Sequencing valves: Sequencing valves shall be tested for proper sequencing through all the outlets (turn pump on/off through all zones).

6.37 Advanced Pressure Drainfields (APDs)

A. General

1. An advanced pressure drainfield must not be used without an advanced treatment unit(s) that has been approved by the Department to meet either Category 1 or Category 2 technology designations. An APD shall not be used with septic tank effluent. APDs include bottomless sand filters (BSFs) and pressurized shallow narrow drainfields (PSNDs).

2. Protecting the APD from Damage: The landscape over and immediately adjacent to any APD system shall be protected in accordance with § 6.33(T)(2) of this Part.

B. APD Common Design Parameters

1. APD hydraulic loading rates: Sizing of the APD is based on soil texture, structure and consistence of the most restrictive horizon within three (3) feet below the proposed base of the APD (see § 6.37(E)(4) of this part). A soil evaluation by a Class IV Soil Evaluator is required.

2. Flow Differential Between the First and Last Orifice in APD Laterals: The maximum head differential between the first and last orifice on each APD lateral shall be no greater than ten percent (10%).

3. Maximum Volume per Orifice per Dose: All APDs covered by this document shall be dosed up to a maximum of zero point two five (0.25) gallons per orifice per dose.

4. Hydraulic loading rates for Advanced Pressure Drainfields.

Soil Category	Soil Texture	Soil Structure	Soil Consistence In-Hand Using Soil Clods	Excavation Difficulty	Category 1 Technologies Loading Rate (gal/ft2/day)	Category 2 Technologies Loading Rate (gal/ft2/day)
1	cos, s, lcos, ls, cosl, fs	structureless-single grain or subangular blocky	loose friable	none	2.3	1.5
2	vfs, lvfs	structureless-single grain	loose	none	2.7	1.9
3	ls, sl, l	granular, subangular blocky	very friable to friable	low	3.5	2.3
4	lfs, lvfs, fsl, vfs	granular, subangular blocky	very friable to friable	low	3.1	2.0
5	sil, si, vfsl	subangular blocky	very friable to friable	low	2.7	1.9
6	lcos, cosl, lfs, ls, sl, l,	structureless massive	very friable to friable	low	2.3	1.5
7	fsl, vfsl, sil, si, vfs	structureless-massive	very friable to friable	low to moderate	2.1	1.5
8	all textures	structureless-massive	firm to very firm	moderate	1.9	1.3
9	all textures	platy or structureless-	firm to very firm	high	1.5	1.0
10	all textures	platy or structureless-massive	extremely firm	very high to extremely high	Not Allowed	Not Allowed

Notes:

(1) Loading rates shall be based on 115 gallons/bedroom and upon texture, structure, and consistence of the most restrictive horizon within 3 feet below the proposed base of the APD. Please see §§ 6.76, 6.77, 6.79, 6.82, and 6.83 of this Part, Figures 18, 19, 21, 24, and 25.

(2) Pressurized shallow narrow drainfields placed in cos, vcos, gravelly or very gravelly soils shall be installed over a leveled-off 6-inch layer of sand meeting ASTM C-33 incorporated above at § 6.7(G) of this Part.

C. Bottomless Sand Filters (BSFs)

1. BSF design guidelines: All BSFs shall conform to § 6.36(A) of this part "General design parameters for all pressurized drainfields".

   a. Vertical separation distances: All vertical separation distances defined in the Part 6 of this Subchapter must be met when using a BSF. The vertical separation distance shall be measured from the cover stone-sand interface below the PVC distribution manifold, to the seasonable high water table (SHWT) or to the impervious layer as defined by the Department. (See §§ 6.76 and 6.77 of this Part, Figures 18 and 19). The required separation distance to the SHWT shall be measured from twenty-four inches (24") above the base of the BSF (the minimum depth of sand media).

   b. Hydraulic loading rates: Hydraulic loading rates for BSFs will be based on the native receiving soil characteristics and the quality of wastewater being discharged by the preceding secondary treatment unit. These rates are provided in the table in § 6.37(B)(4) of this Part.

   c. Finished grade: Finished grade around any BSF shall be a minimum of six inches (6") and a maximum of twenty four inches (24") below the top of the enclosure to prevent surface water from flowing onto the filter. One (1) layer of secured pressure treated timbers with minimum nominal dimensions of six inches by six inches (6" x 6"), (or other suitable structural support) shall be placed around the top perimeter (See §§ 6.76 and 6.77 of this Part, Figures 18 and 19).

   d. Fill perimeter: The land surface elevation two (2) feet below the cover stone-sand media interface shall be maintained for a distance of at least five (5) feet from the edge of the BSF. Land surface re-grading adjoining this five foot (5') perimeter must maintain a minimum of 3:1 (run:rise) slope down gradient (See § 6.76 of this Part, Figure 18).

   e. BSF protection: The proposed BSF location shall be staked out and protected in accordance with § 6.33(T)(2) of this Part prior to any site preparation activities.

   f. Setbacks to trees and shrubs: A minimum buffer of ten (10) feet shall be maintained between BSFs and neighboring trees and shrubs. Where the 10- foot (10') buffer cannot be maintained, a root barrier fabric shall be placed between the trees and shrubs and the filter.

   g. No structures, permanent features, or large, heavy or numerous decorations shall be placed on top of the BSF that would obstruct, prevent or hinder operation and maintenance or access to the BSF.

2. Additional components of the BSF: Bottomless sand filters shall also conform to the components in § 6.36(B) of this Part: "Common components for all pressurized drainfields".

   a. BSF Enclosures (See § 6.79, Figure 21)

      (1) The walls of BSFs must be lined with a thirty (30) mil flexible PVC liner with all boots, patches, repairs, and seams having the same physical properties as the liner material.

      (2) Any penetration through the PVC liner wall shall be done with a PVC boot attachment glued to the liner with the appropriate resilient sealer.

      (3) Support walls are needed to prevent caving of the filter walls during construction. These walls shall be rigid and made of sacrificial plywood or particle board (or equivalent; plywood is intended to decompose over time) and supported by at least one row of six inch by six inch (6" x 6") nominal dimension pressure treated timbers (or equivalent) above the finish grade.

(4) A permanent top frame structure (such as pressure treated six inch by six inch (6" x 6") nominal dimension timbers, or other suitable structural support) must be provided on any portion of a BSF that is installed above grade. The top frame structure shall be a minimum of six inches (6”) but no higher than twenty four inches (24”) above grade. The design shall include cross-bracing to maintain structural integrity of the frame. Below grade use of timbers is prohibited.

b. Bottomless Sand Filter Media Specifications: All media within the enclosure and below the cover stone shall have an effective size (D10) of 0.33 mm (+/-) and uniformity coefficient (D60/D10) of 2.0 to 4.0. The maximum allowable percentage of fines passing through a Number 200 sieve shall be one percent (1%). Other than the gradation and fine content specified above, the sand media shall meet the other ASTM C- 33 sand specifications.

c. BSF distribution laterals

(1) General: Influent applied to a BSF shall be distributed over the sand surface using small diameter, pressure rated SCH 40 PVC pipe.

(2) Orifices: A series of clean, uniform, one-eighth (1/8") inch diameter holes (orifices) shall be drilled in the distribution laterals and spaced no less than fourteen (14") inches and no more than twenty four (24") inches apart. Two (2) orifices in each lateral shall be drilled pointing up (12 o'clock position) and be located approximately one third (1/3) and two thirds (2/3), respectively, along the length of each lateral. All other orifices shall be drilled pointing down (6 o'clock position). Orifice shields shall be placed over each orifice (above or below the lateral, as required). Orifice shields placed below any orifice shall contain slots or holes to provide free draining (usually referred to as cold weather orifice shields, see §6.80 of this Part, Figure 22).

(3) Laterals: Laterals shall be spaced between fourteen (14) inches and twenty four (24) inches on center and shall be no longer than fifty (50) feet.

(4) Lateral ends: The distal end of each BSF lateral shall be fitted with a forty five (45) degree elbow and closed off with either a ball valve or a threaded end and cap (see §6.81 of this Part, Figure 23).

(5) Orifice square grid and space to liner: Lateral spacing and orifice spacing shall be as close to square as practicable. The space from the ends of the laterals to the liner shall be close to half the orifice spacing and be able to accommodate the fittings (i.e.: 45 degree elbow, threaded end adapter and cap) and have sufficient space for maintenance activities. See §6.78 of this Part, Figure 20.

d. BSF inspection well: One (1) inspection well shall be installed in the approximate center of the filter and extend down to the sand and native soil interface (See §§ 6.76, 6.77, and 6.78 of this Part, Figures 18, 19 and 20). Larger zoned BSFs shall have at least one (1) inspection well per zone.

e. BSF cover stone: A three eighths to one half (3/8 – 1/2") inch round or sub-rounded, screened or crushed, uniform in size so that no more than five percent (5%) of the sample is greater than one half inch (1/2”) and no more than five percent (5%) shall pass a three eighths inch (3/8”) sieve, non-shale or other soft stone, double washed, containing little or no fines shall be used for cover stone on the BSF. Total depth of the stone shall be eight to nine (8-9) inches, depending on the size of the lateral (see § 6.79 of this Part, Figure 21 and installation procedures).

3. BSF Installation Specifications

a. The proposed BSF location shall be staked out and protected prior to any site preparation activities.

b. Installation of BSF media

(1) BSF base: Sod, vegetation, or dead or decaying organic litter or any organic soil horizon shall be removed from the area planned for the BSF installation. Once the proper design elevation for the BSF base has been reached and the enclosure is in place, three (3) inches of the native soil material shall be scarified and thoroughly mixed with 3 inches of the sand media (see § 6.79 of this Part, Figure 21). Perimeter stripping is prohibited. Excavation of soil beneath the established native soil and filter sand interface is prohibited unless a boulder, stone, fill, or other unexpected condition is encountered. Only approved gravel (§ 6.33(M) of this Part) or BSF sand media shall be placed for backfilling the base of the BSF before placement of the required sand media.

(2) Placing sand media: All sand media placed within the BSF enclosure and below the cover stone must meet the requirements of § 6.37(C)(2)(b) of this Part and must be a minimum of twenty-four (24) inches deep. The excavator or backhoe bucket used to place media in the filter shall be washed thoroughly to remove any mud or fines before the loading process begins. The sand media shall be placed in level eight (8) inch lifts in the filter. Each lift of sand media shall be lightly compacted.

(3) Placing stone cover: After the required amount of filter sand has been added to the filter, place three (3) inches of three-eighths inch (3/8") double washed stone over the filter sand. After the distribution laterals and orifice shields have been assembled atop the cover stone, six (6) more inches of cover stone shall be added. The total depth of cover stone over the sand media will be eight (8) to nine (9) inches, depending on the size of lateral pipe employed (see § 6.79 of this Part, Figure 21).

(4) Burial precautions: BSFs shall not be buried or covered by topsoil or any other material which will limit the gas or oxygen movement into and out of the filter. Designer shall also note on their plans that the area of the BSF shall be treated as a wastewater utility as tampering with a BSF may present a public health risk. The BSF shall be accessed and serviced by trained professionals only.

D. Pressurized Shallow Narrow Drainfield

1. PSND Design Guidelines: PSNDs shall also conform to § 6.36(A) of this part, “Common design parameters for all pressurized drainfields”.

a. Vertical separation distances: All vertical separation distances defined in §§ 6.33(H), 6.33(I), 6.43(E), and 6.44(C) of this Part must be met when using a PSND. The vertical separation distance shall be measured from the base of the PSND (the natural receiving soil surface), to the SHWT or to impervious layer. The bottom of each lateral must be kept level. The required separation distance to the SHWT shall be twenty-four inches (24”) statewide; the required separation distance to any impervious material shall be forty eight inches (48”) statewide unless otherwise specified by permit..

b. Trench spacing: The minimum trench spacing shall be two and one-half (2.5) feet on-center (one and one-half (1.5) feet edge-to-edge).

c. Shape and geometry: PSND laterals shall be placed lengthwise along the existing site contours. Laterals can be broken into zones of different shapes, so long as the total basal area of each shape (zone) is the same as the other zones.

d. Finished grade: Finished grade shall prevent surface water ponding and prevent surface runoff over the PSND area.

e. Fill perimeter: The land surface elevation of the infiltrative surface of each trench shall be maintained for a distance of five (5) feet from the edge of the PSND. Land surface re-grading adjoining this five foot (5') perimeter must maintain a minimum of 3:1 (run:rise) slope down gradient for at least twenty five (25) feet before meeting existing grade.

f. Soil between trenches: Preservation of the native soil between trenches and minimizing its disruption and compaction during construction is essential to maintaining soil structure and therefore water and gas movement in the soil around the trenches. For this reason construction is to be trench-by-trench (relief from this requirement may be granted by the Department on a case-by-case basis when informed of unanticipated site conditions encountered during construction, see § 6.82 of this Part, Figure 24). Excavation equipment with minimal pressure impact (i.e.: mini excavators) shall be used when constructing PSNDs.

2. Additional Components of the PSND: PSNDs shall also conform to the components in § 6.36(B) of this Part, “Common components for all pressurized drainfields”.

a. Orifices: A series of clean, uniform, one-eighth (1/8) inch diameter holes (orifices) shall be made in the top of the distribution laterals (12 o’clock position) and spaced according to the dosing requirements of the system. Every fifth orifice along the lateral shall be drilled from the bottom of the pipe (6 o’clock positions and eliminating the up-facing orifice in that location) to allow drainage after a dose and to prevent lateral freezing in cold weather.

b. Lateral clean outs: SCH 40 PVC or equivalent sweep elbows shall be attached to the distal end of each PSND lateral to facilitate maintenance and inspection (§ 6.83 of this Part, Figure 25). A standard ninety (90) degree elbow shall not be used here because it will interfere with maintenance activities.

c. Lateral access ports: The ends of the sweep elbows shall be readily accessible by means of a six (6) to eight (8) inch diameter access box or port brought to finish grade (see §§ 6.82 and 6.83 of this Part, Figures 24 and 25). Access ports shall be placed every twenty (20) feet maximum along each lateral but no more than two (2) access ports are required for each lateral (one at the midpoint of the lateral and one at the clean out).

d. Drainfield Cover: The dome-like covering over the PSND should be made of twelve (12) inch diameter PVC plastic or an approved equivalent (see §§ 6.82 and 6.83 of this Part, Figures 24 and 25). Support bars (see § 6.37(D)(3)(c) of this Part, "PSND Installation Specifications") shall be used along the trench to provide a larger bearing surface that keeps the thin edge of the dome (PIP pipe only) from digging deep into the infiltrative soil surface.

e. Trench Maximum Length: Maximum trench length shall not exceed fifty (50) feet.

3. PSND Installation Specifications

a. The proposed PSND location shall be staked out and protected prior to any site preparation activities.

b. Trenches: Each trench base must be level. Do not over-dig the width or depth of the individual trenches; minimal backfilling on bottom and sides provides a more stable enclosure. Scarify each trench bottom before installing components. PSNDs placed in cos, vcos, gravelly or very gravelly soils shall have a leveled-off six (6) inch ASTM C-33 sand layer. Do not remove the soil between the trenches. If the presence of boulders, heavy roots, or other obstacles make trench construction impractical, the basal area may be excavated as necessary, backfilled with a maximum of ten (10) inches of ASTM C-33 sand (concrete sand) to the design elevation of the bottom bed, the PSND constructed and backfilled with native soil material (see § 6.82 of this Part, Figure 24). Prior approval by the Department and notification of the designer of record is required in order to remove material between or under trenches.

c. Support bars: One (1) inch diameter by fourteen (14) inch long Schedule 40 PVC support pipes shall be used to support the dome (and pressure pipe), to act as a spreader device and to provide a greater bearing surface for the dome. These support/spreader pipes shall be spaced approximately four (4) feet apart or whenever a drainfield cover joint occurs. Notches shall be cut one (1) inch from either end of the support pipes for the cover to fit into.

d. Laterals: Laterals shall be as specified in § 6.37(D)(2) of this Part and shall be installed over the support bars.

e. Drainfield cover: The dome-like cover should snap over the spreader bars and into the notches. A minimum of three (3) inches overlap shall exist between drainfield cover joints. Filter fabric shall cover the overlap joint.

f. Inspection/access ports and ends of trenches shall be as specified in § 6.37(D)(2) of this Part and installed in access holes in the drainfield cover.

g. Grass cover: PSNDs shall be kept free of debris and planted to a sod cover or seeded with grass and protected. A watering program shall be in place until a healthy and sustainable grass cover is obtained.

6.38 Low Pressure Pipe (LPP)

A. LPP design guidelines: LPPs shall also conform to § 6.36(A) of this Part: “General design parameters for all pressurized drainfields”.

1. All LPP systems under this guidance shall conform to the design sizing parameters contained in Part 6 of this Subchapter for leachfields. Trench end interconnections are not required when using LPP. If drainfield reduction size is sought due to using advanced treatment technology, it shall conform to the approved letter from the advanced treatment technology immediately before the LPP.

2. Wastewater quality: When using LPPs with advanced treated wastewater, the pretreatment must meet the requirements for either Category 1 or Category 2 technologies. When using LPPs with residential septic tank effluent, the quality of the effluent shall conform to BOD5 less than or equal to one hundred seventy (170) mg/L, TSS less than or equal to sixty (60) mg/L and FOG less than or equal to twenty five (25) mg/L (residential strength septic tank effluent).

3. Vertical separation distances: All vertical separation distances defined in §§ 6.33(H), 6.33(I), 6.43(E), and 6.44(C) of this Part must be met when using LPP. The vertical separation distance shall be measured from the base of the LPP (the natural receiving soil surface), to the SHWT or to impervious layer.

4. Cover: The cover from the top of the LPP to the proposed grade shall be from six inches (6”) to eighteen inches (18”) (see § 6.84 and 6.85 of this Part, figures 26 and 27).

5. All LPPs shall be timed-dosed, either by the timed-dosed technology preceding it (i.e. Category 1 technology) or by incorporating a timed-dosed component as specified in § 6.36(B) of this Part.

6. Flow differential between first and last orifice in the laterals: The maximum head differential between the first and last orifice on each lateral shall be no greater than fifteen percent (15%).

7. Pump events per day and maximum dose per LPP orifice: The number of dose events per day shall be between twelve (12) and twenty four (24). The maximum dose per LPP orifice shall be zero point five (0.50) gallons.

B. Components of the LPP: LPPs shall also conform to other components in § 6.36(B) of this Part: "Common components for all pressurized drainfields".

1. Schedule 40 PVC or equivalent sweep elbows (also called "turnups") shall be attached to the distal end of each lateral to facilitate maintenance and inspection. A standard ninety (90) degree elbow shall not be used.

2. Orifice size and spacing: For advanced treated effluent one eighth (1/8) inch diameter (minimum) orifices shall be made in the top of the distribution laterals (12 o'clock position) and spaced according to the dosing requirements of the system. Orifice size for use with septic tank effluent shall be three sixteenths (3/16) inch diameter. Every fifth orifice along the lateral shall be drilled from the bottom of the distribution laterals (at the 6 o'clock position, with no upfacing hole at that location) to allow drainage after a dose and to prevent lateral freezing in cold weather.

3. Orifice shields or sleeves for dispersal trenches: Orifice shields shall be used at every orifice. Cold weather orifice shields are required for the down facing orifices (6 o'clock position). In lieu of orifice shields, the pressure lateral may be inserted into a three or four-inch (3"or 4") diameter high density polyethylene HDPE corrugated slotted or perforated pipe. The sleeve shall extend to the sweep elbow and into the inspection port. Pipe slots or perforations shall point in a downward (6 o'clock) direction (see § 6.84 of this Part, Figure 26). When using plastic chambers, the laterals shall be suspended from the inside top of the plastic chamber with appropriate ties. The ties shall be spaced, at minimum, every three (3) feet. When using concrete chambers, the laterals shall be placed above the crushed stone under the concrete chambers or inside the precast concrete channel. When the lateral is installed above the crushed stone, the knockout at the bottom of each concrete chamber unit shall be open so not to crush the pressure lateral upon installation (see § 6.85 of this Part, Figure 27). When the lateral is placed inside the precast concrete channel inside the concrete chamber, the concrete observation ports shall be removed, only at the required manhole riser interval. For either plastic or concrete chambers, orifice shields shall be placed on the up facing orifices only when the orifice lies within an observation port or manhole. For concrete chambers with laterals installed on top of the crushed stone and for all plastic chambers, orifice shields must be used on all the down facing orifices. Orifice shields are not needed if an HDPE corrugated perforated or slotted pipe sleeve is used or if the lateral is installed inside the precast concrete channel on concrete chambers (other than the upfacing orifices within the risers extending to grade).

4. Inspection port: The ends of the sweep elbows shall be readily accessible by means of a six (6) to eight (8) inch diameter access box or port brought to the ground surface.

C. LPP Installation and maintenance specifications: Other than the components specific to LPP's, the trenches shall be installed and maintained in accordance with the current Department Rules or the Department approved technology equivalent replacement approval letters.

6.39 Large OWTS Requirements

A. Applicability - Large OWTSs defined below shall comply with all other applicable provisions of these rules in addition to the requirements in this § 6.36 of this Part. A large OWTS shall be any OWTS designed, installed or operated that meets any of the criteria in § 6.39(A)(1) through (4) of this Part below.

1. Any single OWTS designed to treat five thousand (5,000) gallons or more per day;

2. Multiple OWTSs for any project on one or more parcels of land, excluding residential subdivisions, where the total design flow for the project is five thousand (5,000) gallons or more per day;

3. Multiple OWTSs serving more than one (1) unit in a residential subdivision provided that the total design flow of these OWTSs, each serving more than one (1) unit, is five thousand (5,000) gallons or more per day; or

4. Proposed OWTSs and existing OWTSs on the parcel that will result in a total design flow for the parcel exceeding five thousand (5,000) gallons per day.

B. Application Requirements - All submittals for OWTSs meeting the definitions in § 6.39(A) of this Part shall include the following:

1. Notice Requirements: Each application for a large OWTS shall be accompanied by a list identifying the names and addresses of the local building official, the water supply agency whose water supply is drawn from the watershed or wellhead protection area wherein the property is located, if applicable, all property owners within four hundred (400) feet of any component of the proposed OWTS, and all abutting property owners.

   a. Upon application, the applicant shall notify each person identified in § 6.39(B)(1) of this Part above, of the application by certified mail, return receipt requested.

   b. Each notice shall substantially conform to a form to be provided by the Director and shall include the application number and a certificate of service.

   c. The applicant shall clearly mark each return receipt with the application number and the words "5000 Gallon OWTS."

   d. All persons subject to the notice shall be permitted twenty (20) days from the date specified in the certificates of service within which to submit written comments or information bearing upon the subject application.

   e. All timely submitted comments or information bearing upon the subject application and relating to the intent and purpose of these rules shall be considered by the OWTS Program staff as part of their review of the application.

   f. When all certified receipts have been returned to the applicant, copies of each notice, accompanied by the appropriate certified receipt, shall be filed with the OWTS Program along with a letter requesting that the application be reviewed for final determination.

   g. If a correctly addressed, certified notice is returned to the applicant, the applicant may submit the returned envelope and certified receipt, unopened, along with the other return receipts as proof of the applicant's good faith attempt to serve the notice.

2. Soil evaluation, where required by § 6.16 of this Part;

3. Description of the OWTS and the treatment objectives;

4. Characteristics of the wastewater;

5. Groundwater mounding calculations for any of the component leachfields that are sized for a design flow of five thousand (5,000) gallons per day or greater;

6. Impact analysis in accordance with § 6.39(C) of this Part where the groundwater is classified GA or GAA in accordance with the DEM "Groundwater Quality Rules";

7. Construction materials;

8. Schedule for phased development if applicable; and

9. Plan for operation and maintenance of the OWTS including qualifications of those responsible for maintenance and long-term agreements for maintenance. Such plan shall specify frequency of monitoring and performance inspections and shall include routine maintenance logs needed for proper operation of the OWTS.

C. Impact Analysis - Applicants shall be required to demonstrate that the proposed disposal site is capable of accepting, treating and transmitting effluent at the proposed application rate without adverse impact to surface water or groundwater. Such analysis shall include, but not necessarily be limited to:

1. Surface Water: Applicants shall submit an evaluation of the effect of estimated pollutant loading to surface waters; and

2. Groundwater: Applicants shall conduct modeling of nitrate concentrations in groundwater downgradient of the OWTS at any compliance point defined as the property boundary, drinking water well, or other sensitive receptor as determined by the Director. This compliance point may extend downgradient beyond the applicant's property line if the adjacent property is designated as a groundwater discharge zone in accordance with the DEM "Groundwater Quality Rules." The nitrate concentration modeling shall be done in accordance with the following:

a. For a single OWTS designed to treat five thousand (5,000) gallons or more per day (§ 6.39(A)(1) of this Part), the applicant shall conduct a nitrate impact analysis that models a contaminant plume emanating from the OWTS;

b. For large OWTS defined pursuant to § 6.39(A)(2), (3), or (4) of this Part where one or more of the OWTSs is designed to treat one thousand (1,000) gallons or more per day but less than five thousand (5,000) gallons per day, the nitrate impact analysis may use the entire project site for nitrate dilution modeling unless the Director requires a nitrate impact analysis that models a contaminant plume emanating from any of the OWTSs; or

c. For large OWTS defined pursuant to § 6.39(A)(2), (3), (4) of this Part where all of the OWTSs are designed to treat less than one thousand (1,000) gallons per day, the nitrate impact analysis may utilize the entire project site for nitrate dilution modeling.

D. Groundwater Monitoring - Groundwater monitoring for nitrate and other possible contaminants, at a frequency to be determined by the Director, may be a required condition of the permit approval. Pursuant to the DEM "Groundwater Quality Rules," the Department may require that actions be taken by the applicant when concentrations of nitrate in the groundwater at the point of compliance exceed the preventive action limit of five (5) mg/l.

6.40 Alternative Toilets

A. Alternative toilets include composting toilets that meet or exceed performance standards equivalent to the requirements of the National Sanitation Foundation Standard 41, incorporated above at § 6.7(C) of this Part and incinerator toilets.

1. Alternative toilets shall be installed, operated and maintained in accordance with the manufacturer's specifications; have a positive ventilation system; and must convert toilet contents to an inert, stable, or otherwise harmless condition.

2. The owner shall hold a valid maintenance contract at all times with an entity or individual that is certified by the alternative toilet vendor to provide maintenance of the alternative toilet. The minimum maintenance contract term shall be two (2) years.

3. The owner shall record the approved OWTS construction permit application form and associated permit conditions for this alternative toilet and the initially executed maintenance contract for the system in the municipal land evidence records and provide DEM a copy of the recorded document prior to DEM issuing a certificate of conformance.

4. Two (2) years after the issuance of the certificate of conformance, and every two (2) years thereafter, the owner shall submit a report prepared by a System Inspector documenting the condition of all aspects of the OWTS, including, but not limited to, certification that the OWTS has not been modified and the design remains as permitted.

5. The Department may impose additional conditions on the approval of an alternative toilet to ensure proper operation and protection of public health and the environment.

B. Separate OWTS - When an alternative toilet is utilized, a separate OWTS shall be provided for the treatment of any graywater and designed on sixty percent (60%) of the normal daily design flow as determined by § 6.22 of this Part. If wastewater from any conventional toilets is directed to this leachfield, the leachfield must be designed for one hundred percent (100%) of the daily design flow.

C. Residuals - Solids produced by alternative toilets may be buried on site, unless prohibited by § 6.43 of this Part. Residuals shall not be applied to food crops. Alternative toilets that may generate excess liquids shall either be designed such that the residual liquids are pumped to the graywater septic tank or to a separate holding tank. Liquids shall be removed from this separate holding tank by a DEM permitted septage transporter. This holding tank shall be designed as follows:

1. Have a capacity of two hundred fifty (250) gallons or one year's projected flow as determined by the manufacturer, whichever is greater;

2. Be watertight and meet the construction and materials standards for septic tanks in § 6.27(C) of this Part; and

3. Be equipped with an audio-visual alarm set to activate when the tank reaches eighty percent (80%) of its capacity.

D. Removal and Replacement – The property owner shall submit an OWTS Application for New Building Construction pursuant to § 6.18(E) of this Part in order to remove or replace the alternative toilet.

6.41 Alternative or Experimental Technology Approval

A. No person shall submit an OWTS design application incorporating an alternative or experimental component or technology for wastewater treatment unless such technology has been placed on the Department's approved Alternative or Experimental Technology List.

B. Administrative - The Department shall:

1. Maintain a list of all the approved Alternative or Experimental technologies and all approved guidance documents;

2. Charge fees to cover the cost of administering the Alternative or Experimental approval procedure, and reviewing, monitoring and tracking the performance of alternative or experimental technologies; and

3. Have the authority to remove any approved Alternative or Experimental technology from the Department's approved list whenever the applicant fails to submit reports or monitoring data; fails to perform required maintenance; or fails to fulfill any other required tasks stated within these rules, the approval letter or the approved guidance document.

C. Application Procedure - Application shall be on forms approved by the Director, and shall include the proper fee, all required submittals, performance data and a draft guidance document that details all design, installation, operation and maintenance, and other requirements.

D. Alternative Technology Evaluation Criteria - The Director may approve an alternative OWTS or technology if it meets the following criteria:

1. Class One:

a. The vendor provides at least four (4) consecutive years of performance data per installation for no fewer than ten (10) installations with data collected no less frequently than quarterly that demonstrates that Department standards are met; and

b. The vendor demonstrates that the technology has been approved and utilized successfully for at least four (4) consecutive years in Rhode Island with no fewer than ten (10) installations or at least four (4) consecutive years in at least three other jurisdictions with no fewer than ten (10) installations in each jurisdiction.

2. Class Two: Satisfy either § 6.41(D)(2)(a) or (b) of this Part below:

a. For any technology:

(1) The vendor provides at least two (2) consecutive years of performance data per installation for no fewer than ten (10) installations with data collected no less frequently than quarterly, that documents that Department standards are met;

(2) The vendor demonstrates a theory or applied research; and

(3) The vendor demonstrates that the technology has been approved and utilized successfully for at least two (2) consecutive years in Rhode Island or at least two (2) consecutive years in another jurisdiction with no fewer than ten (10) installations in each jurisdiction.

b. For a nitrogen reducing technology:

(1) The vendor provides certification that the technology meets NSF International/American National Standards Institute “Standard 245- Wastewater Treatment Systems- Nitrogen Reduction”, incorporated above at § 6.7(D) of this Part and the testing results show a preponderance of treated effluent nitrogen concentrations of nineteen (19) mg/l or less; or

(2) The vendor demonstrates approval for use in another jurisdiction in an area where the temperature conditions are similar to or colder than those in Rhode Island and with technology review criteria substantially equivalent to Class One or Class Two listed above in § 6.41(D)(1) or § 6.41(D)(2)(a) of this Part. Substantially equivalent review in another jurisdiction shall be held to mean the other jurisdiction has a minimum nitrogen reduction standard of fifty percent (50%) reduction in total nitrogen concentration and a maximum effluent total nitrogen concentration of nineteen (19) milligrams per liter and the other jurisdiction has a review process in which the vendor’s data is evaluated in light of a technology performance claim.

3. Only those alternative technologies that have been approved and are on the approved Alternative or Experimental Technology List shall be permitted by the Director.

E. Alternative OWTS Component Evaluation Criteria - The Director may approve an Alternative OWTS Component if it meets the following criteria:

1. Class One:

a. The applicant documents that applicable manufacturer's and material standards are met;

b. The applicant provides at least two (2) consecutive years of performance data for no fewer than ten (10) installations that demonstrates Department standards are met, if applicable; and

c. The applicant demonstrates that the component has been approved and utilized successfully for at least two (2) consecutive years in Rhode Island or at least two (2) years in at least three (3) other jurisdictions for no fewer than ten (10) installations in each jurisdiction.

2. Class Two:

a. The applicant documents that applicable manufacturer's and material standards are met;

b. The applicant provides one (1) year of performance data for no fewer than ten (10) installations that demonstrates Department standards are met, if applicable;

c. The applicant demonstrates a theory or applied research; and

d. The applicant demonstrates that the component has been approved and utilized successfully for a minimum of one (1) year in Rhode Island or in at least one (1) other jurisdiction with no fewer than ten (10) installations.

3. Only those Alternative OWTS components that have been approved and are on the approved Alternative or Experimental Technology List shall be permitted by the Director.

F. Experimental Technology Evaluation Criteria - The intent of an Experimental Technology Approval is to evaluate, under actual field conditions, alternative OWTS that appear technically capable of providing levels of environmental protection at least equivalent to those provided by an OWTS installed in compliance with these rules. Data gathered under an Experimental Technology approval may be used to apply for Alternative Technology Class Two approval.

1. Site Selection - Experimental Technology vendors shall propose at least three (3) sites and no more than ten (10) sites where the technology will be applied. The technology may be approved for additional sites in future years if the vendor demonstrates the initial installations meet performance claims. Each location shall provide a suitable area for the installation of an OWTS permitted under these rules or an OWTS on the Department's approved Alternative Technology list. The Director reserves the right to waive this requirement for multi-family or commercial OWTSs.

2. The Director may approve an Experimental Technology if the vendor meets the following criteria:

a. Prior to the approval of any OWTS utilizing the Experimental Technology, the vendor shall supply data that demonstrates that the Experimental Technology will work in practice and in theory;

b. The vendor agrees in writing to retain a third party acceptable to the Department to conduct sampling on each of the OWTS with data collected no less frequently than quarterly to document that the Experimental Technology meets performance claims;

c. Substandard Performance - The vendor agrees in writing to the following conditions regarding the performance of the Experimental Technology:

(1) For OWTS Applications for New Building Construction and OWTS Applications for Alteration to a Structure where design flow is increased, the vendor must guarantee the performance of the Experimental Technology and provide for replacement with an OWTS on the Department's Alternative Technology List if the Department determines that the Experimental Technology fails to meet the performance claim(s) after two (2) years;

(2) For OWTS Applications for Repair and OWTS Applications for Alteration to a Structure where there is no increase in flow, the vendor or system owner may, at the Department's discretion, be required to repair, replace, or take any other action as required by the Department if the Department determines that the Experimental Technology fails to meet the performance claims after two (2) years or is found to be a failed OWTS.

d. Financial Responsibility - The vendor proposing the Experimental Technology, the property owner and subsequent purchasers shall submit a signed statement to the Director agreeing to repair, replace, or modify the Experimental Technology, including to install an OWTS permitted under these rules or an OWTS listed on the Department's Approved Alternative Technology List if the Department determines that the Experimental Technology fails to perform as designed. The signed statement must clearly state who is responsible for the cost of repairing, replacing, or modifying the OWTS, whether through a bond or other form of financial security posted by the vendor and acceptable to the Director, or by the written agreement of the system owner to accept financial responsibility.

G. Review and Approval

1. The Director shall review the application and respond as follows:

a. Approve or deny the application as submitted;

b. Recommend resubmission of the application with modifications as proposed by the Director;

c. Recommend resubmission and reclassification under § 6.41(D) through (F) of this Part; or

d. Recommend both resubmission of the application with modifications and reclassification.

2. Technical Review - The Department shall establish an Onsite Wastewater Treatment System Technical Review Committee (OWTS TRC) consisting of individuals with technical or scientific knowledge applicable to OWTS whose purpose is to provide technical advice to the Director. The Department shall select members for the OWTS Technical Review Committee from one or more of the following organizations: Department of Environmental Management; CRMC or other state agencies; University/college academic communities; OWTS design and installation firms; Environmental organizations; Public utilities; Builders; Local municipalities; and other parties. At the request of the Director, the OWTS Technical Review Committee may review the application and submit recommendations on the proposed Alternative Technology, Alternative OWTS Component or Experimental Technology. Recommendations from the OWTS Technical Review Committee shall be submitted to the Director within ninety (90) days from the application date.

3. The Director may establish special conditions as necessary to ensure adequate protection of the public health and the environment in its approval of alternative or experimental technologies. Such conditions may include without limitations: special qualification requirements for designers and installers; specification of site characteristics; or monitoring, testing and reporting requirements.

4. If the Alternative or Experimental Technology is approved by the Director, the applicant shall submit a finalized guidance document to the Director detailing all design, installation, operation and maintenance requirements. Once the guidance document has been approved, the applicant shall schedule one (1) or more training events for Licensed OWTS Designers and Licensed OWTS Installers. The Alternative or Experimental Technology shall be placed on the Department's list after the first training event has been held. The Department shall maintain the approved Alternative or Experimental Technology List and maintain all appropriate guidance documents for the following:

   a. Alternative or Experimental Technologies that are approved by the Director; and

   b. Alternative OWTS Components that are approved by the Director.

H. Approved Alternative or Experimental Technologies

1. The Director may require any of the following:

   a. Monitoring or sampling of any OWTS or OWTS component;

   b. Submittal of evaluation reports when an OWTS or OWTS component's performance is evaluated; or

   c. An annual report of all OWTS or component installations, failures and corrective action taken.

2. Persons desiring to modify an approved Alternative or Experimental Technology currently on the approved Alternative or Experimental Technology List shall make the request in writing and submit the following to the Department:

   a. Documentation demonstrating the applicant's compliance with the terms or conditions of the original approval of the Alternative or Experimental Technology; and

   b. Required fees, in accordance with § 6.54 of this Part for Alternative or Experimental Technology.

3. In order to remain on the Department's approved Alternative or Experimental Technology List, the applicant shall submit:

   a. Application for renewal ninety (90) days before expiration of the certification;

   b. Renewal fee in accordance with § 6.54 of this Part; and

   c. Documentation that the applicant is in compliance with the requirements of these rules and in compliance with the expiring certification.

I. OWTS Applications Utilizing Alternative or Experimental Technology - Once an Alternative or Experimental Technology application is approved, individual applications to design, construct, alter, or install a Department approved Alternative or Experimental Technology may be submitted to the OWTS section of the Office of Water Resources.

1. All applicants obtaining an OWTS permit for a Department approved Alternative or Experimental Technology requiring special operation and maintenance procedures shall:

   a. File a copy of the initially executed contract for the OWTS's operation and maintenance, (including all required maintenance procedures and monitoring schedules) with the land evidence records of the municipality in which the OWTS is located; and

b. Submit to the Department a certified copy of the recorded contract setting forth the date of the recordation and the book and page where the contract is located in the records of the municipal land evidence office.

2. The Department shall not issue a conformance until the documents in § 6.41(I)(1) of this Part are recorded with the municipality and a certified copy of the recorded contract is submitted to the Department.

6.42 Critical Resource Areas - General

A. Areas have been identified as critical resource areas which are deemed to be particularly sensitive to the detrimental effects of nutrients, pathogenic organisms, organic chemicals and other substances that may be present in effluent from OWTSs. These areas are in need of special protection from such effects due to the unique and irreplaceable value of the resource as a public water supply, fisheries habitat or public recreation area.

B. Standards for siting and design of OWTSs in these §§ 6.42, 6.43, and 6.44 of this Part are established to enhance the treatment capability of OWTSs and thereby reduce the potential for adverse effects to critical resources. In areas designated as critical resources, the standards of §§ 6.42, 6.43, and 6.44 of this Part shall supersede minimum standards wherever applicable.

C. Designation - Areas designated as critical resource areas are defined below in § 6.42(C)(1) through (3) of this Part. If the applicant disputes a delineation in § 6.42(C)(1) through (3) of this Part, the applicant may submit information on groundwater or surface water flow to demonstrate to the Director by a preponderance of clear and scientifically valid evidence that the delineation in question is incorrect.

1. Salt Pond Critical Resource Area: The watersheds, or portion thereof, to the salt ponds of Charlestown, Narragansett, South Kingstown, and Westerly as determined by the Rhode Island Coastal Resources Management Council's Salt Ponds Region Special Area Management Plan (See § 6.86 of this Part, Figure 28), unless a determination of the groundwater recharge area to the salt ponds has been adopted by the Department and the Coastal Resources Management Council. The Salt Pond critical resource area includes the watersheds, or portion thereof, to the following: Maschaug Pond, Winnapaug Pond, Quonochontaug Pond, Ninigret Pond, Green Hill Pond, Trustom Pond, Cards Pond, Potter Pond, and Pt. Judith Pond.

2. Narrow River Critical Resource Area: The Narrow River watershed, or portion thereof, as determined by the Rhode Island Coastal Resources Management Council's Narrow River Special Area Management Plan (See § 6.87 of this Part, Figure 29), unless a determination of the groundwater recharge area to the Narrow River has been adopted by the Department and the Coastal Resources Management Council.

3. Drinking Water Supply Watersheds: Watersheds of public water system drinking water supply reservoirs, unless a determination of the groundwater recharge area to the reservoir has been adopted by the Department. The public water systems include the following and any other public water system with a drinking water supply reservoir approved by the Rhode Island Department of Health (See §§ 6.88 through 6.91, Figures 30-33): Bristol County Water Authority, Cumberland (town of), Eleanor Slater Hospital/Zambarano Unit, Jamestown (town of), New Shoreham (town of), Newport (city of), Pawtucket Water Supply Board, Providence Water Supply Board, Stone Bridge Fire District, Woonsocket (city of), and Yawgoog Scout Reservation.

D. OWTS Location - The applicant shall be required to certify the location of a disposal area with respect to any critical resource area. If the Department determines that an OWTS may be wholly or partially located within a critical resource area, the applicant shall be required to provide evidence of the location with respect to the critical resource.

E. OWTS Applications for Alteration to a Structure in Critical Resource Areas - An OWTS Application for Alteration to a Structure which will result in an increase in the flow or change in the type of wastewater within a Critical Resource Area may not be approved unless the OWTS meets all design and siting requirements of the rules in effect at the time of permit application. The Department may grant an exemption to this provision through the variance process pursuant to § 6.51 of this Part if it is demonstrated that the deviation from the standard is minor.

6.43 Requirements in the Salt Pond and Narrow River Critical Resource Areas

A. For OWTSs located in the Salt Pond and Narrow River critical resource areas as defined in § 6.42(C)(1) and (2) of this Part, respectively, the standards established in §§ 6.42 and 6.43 of this Part shall supersede minimum standards established elsewhere in these rules.

B. Nitrogen Reducing Technology

1. Nitrogen reducing technology shall be required for all OWTS Applications for New Building Construction, all OWTS Applications for Alteration to a Structure, and OWTS Applications for Repair in the Salt Pond and Narrow River critical resource areas. DEM may waive this requirement for Applications for Repair involving only the replacement of the septic tank if the applicant demonstrates that the leachfield is not failed based on the criteria in § 6.8 of this Part, met the rules in effect when the leachfield was installed, and is located more than two hundred (200) feet from a coastal shoreline feature. Applicants must still meet all CRMC established density and other requirements where applicable.

2. Use of Composting Toilets - Composting toilets meeting the criteria of § 6.40 of this Part may be approved for use as a nitrogen reducing technology provided that:

a. Solid and liquid residuals produced by the composting toilet are removed from the site and properly disposed of at an approved facility beyond the boundary of the Salt Pond and Narrow River Critical Resource Area;

b. All blackwater from the structure must receive treatment via the composting toilet; and

c. All liquid residuals are directed to a holding tank consistent with § 6.40(C) of this Part.

3. Exemptions for Applications for Repair - The provisions of § 6.43(B)(1) of this Part may not apply to an OWTS Application for Repair if the Municipality where the OWTS is located:

a. Adopts an ordinance that the Department determines reduces the long-term nitrogen load to the Salt Ponds or Narrow River equivalent to or more than the provisions of § 6.43(B)(1) of this Part; and

b. Enters into a legally binding agreement with the Department and petitions the Department for prior review of pertinent applications pursuant to § 6.18(C) of this Part.

C. Location - The horizontal distances between the parts of any OWTS and the feature requiring a setback shall not be less than those shown in § 6.23(B) and (D) of this Part.

D. Site Suitability - OWTS shall not be located where the seasonal high groundwater table is within five (5) feet of the original ground surface, or where a restrictive layer or bedrock is within seven (7) feet of the original ground surface, except in areas where the seasonal high groundwater table is within two (2) to five (5) feet of the original ground surface, or where a restrictive layer or bedrock is within four (4) to seven (7) feet of the original ground surface and either of the following in § 6.43(D)(1) or (2) of this Part occur. Twenty-five (25) feet shall be maintained from the leachfield to any area where the groundwater table is less than two (2) feet to the original ground surface, or where bedrock is less than four (4) feet to the original ground surface.

1. Application is for an Alternative or Experimental OWTS approved pursuant to § 6.41 of this Part for use under these conditions; or

2. Application is for a dispersal trench OWTS that meets the following conditions:

   a. The maximum depth of stone below the distribution pipe invert is one-half (0.5) feet; and

   b. The minimum distance between walls of adjacent dispersal trenches is ten (10) feet.

E. OWTS Vertical Separation Distance to Groundwater - The bottom of the stone underlying the leachfield (or surface upon which the biomat develops) shall be at least four (4) feet above the seasonal high groundwater table when either soil category 1, 2, 3, 4, or 6 are encountered in determining the maximum leachfield loading rate in accordance with § 6.33(B)(2) of this Part.

6.44 Requirements in Drinking Water Supply Watershed Critical Resource Areas

A. For OWTSs located in drinking water supply watersheds as defined in § 6.42(C)(3) of this Part, the standards established in §§ 6.42 and 6.44 of this Part shall supersede minimum standards established elsewhere in these rules.

B. Subsurface Drains - Subsurface drains to lower the seasonal high groundwater table are not permitted.

C. OWTS Separation Distance to Groundwater - The bottom of the stone underlying the leachfield (or surface upon which the biomat develops) shall be at least 4 feet above the seasonal high groundwater table when either soil category 1, 2, 3, 4, or 6 are encountered in determining the maximum leachfield loading rate in accordance with § 6.33(B)(2) of this Part.

D. Location - The horizontal distances between the parts of any OWTS and the feature requiring a setback shall not be less than those shown in § 6.23(C) of this Part.

6.45 Nitrogen Loading in Areas of Onsite Drinking Water Wells

A. Applicability - For all OWTS applications for New Building Construction and for Alterations to a Structure, the design flow for an OWTS shall not exceed three hundred forty-five (345) gallons per day per twenty thousand (20,000) square feet of applicant's lot area where the property utilizing the OWTS or any adjacent lot is served by an onsite drinking water well (public or private), or if there is a drinking water well within two hundred (200) feet of the proposed OWTS, except as provided for below in § 6.45(B) and (C) of this Part. The Director may require this standard to be met for OWTS Applications for Repair in areas where the groundwater is shown to exceed the Preventive Action Limit for nitrate of five (5) mg/l, pursuant to the DEM "Groundwater Quality Rules." The three hundred forty-five (345) gallons per day per twenty thousand (20,000) square feet loading limitation is equivalent to approximately one-sixth (1/6) acre of applicant's lot area per bedroom. This rule applies to all OWTS except those subject to the requirements of § 6.39 of this Part. Applicants must still meet all CRMC established density and other requirements where applicable. Compliance with § 6.45 of this Part does not relieve applicants of the nitrogen reducing technology requirements in § 6.43 of this Part.

B. Design Flow Calculation - The three hundred forty-five (345) gallons per day per twenty thousand (20,000) square feet design limit may be exceeded for OWTSs utilizing nitrogen reducing technology. The allowed design flow with a nitrogen reducing technology is derived using the Equation in § 6.45(C) of this Part or read from § 6.45(D) of this Part. For the purposes of § 6.45 of this Part, there are no limits on the design flow of OWTSs with nitrogen reducing technologies that are approved by the Director as meeting the nitrogen standard of ten (10) mg/l.

C. Nitrogen Loading

$$\frac{MaximumDesignFlow}{20{,}000\,ft^2} = \frac{1}{1-\left(\frac{\%\ \text{Nitrogen Removal}}{100}\right)} \times 345\,\text{gpd}$$

D. Nitrogen Loading

Nitrogen Removal (Percentage)	Effluent Nitrogen Concentration (mg/l)	Maximum Design Flow per 20,000 sq. ft. (gpd)
50	19	690
66	13	1015
75	10	1380

E. Exceedance of Design Flow Calculation - The three hundred forty five (345) gallons per day per twenty thousand (20,000) square feet design limit or other design limit utilizing nitrogen reducing technologies pursuant to § 6.45(B) of this Part may be exceeded by the establishment of nitrogen credit land meeting the requirements of § 6.45(F) of this Part under the following circumstances:

1. For subdivisions - The design limit must be met over the entire area of the subdivision. This can be met by designating portions of the subdivision as nitrogen credit land.

2. For individual lots - The design limit can be calculated by establishing adjacent properties as nitrogen credit land with the consent of the property owner.

F. Nitrogen Credit Land - Nitrogen credit land cannot be designated on land that is already being used to meet the nitrogen loading requirements for an OWTS approved by the Director. Nitrogen credit land must be restricted by a deed restriction, conservation easement, or other appropriate legal instrument recorded in the municipal land evidence records such that:

1. Addition of nitrogen from wastewater discharge, nitrogenous fertilizer (synthetic or natural), and raising and grazing livestock is prohibited; and

2. Impervious surfaces, which reduce recharge, including paved streets, paved parking areas, and structures are prohibited.

6.46 Permit Expiration

A. Expiration of Permits for OWTS Applications for New Building Construction and OWTS Applications for Alteration to a Structure

1. Except for permits eligible for tolling pursuant to R.I. Gen. Laws § 42-17.1-2.5 as provided in § 6.46(A)(2) of this Part, all permits for OWTSs for New Building Construction and OWTSs for Alteration to a Structure approved in accordance with § 6.17 of this Part shall expire five (5) years from the date of the issuance of the permit.

2. Pursuant to R.I. Gen. Laws § 42-17.1-2.5, and unless otherwise ordered by the Department, permits for New Building Construction or Alteration to a Structure relating to the development of property that were valid on, or issued after, November 9, 2009 that are subject to tolling pursuant to R.I. Gen. Laws § 42-17.1-2.5 shall be tolled for the period provided by R.I. Gen. Laws § 42-17.1-2.5 and expire on the date five (5) years after approval plus the tolling period in accordance with said statute.

B. Expiration of Permit after Start of Construction

1. Notwithstanding § 6.46(A) of this Part, where a permit for an OWTS for New Building Construction has been issued, and construction of the building foundation or OWTS has begun, the applicant shall have one (1) year from the start of construction, within which to complete both the foundation and OWTS. If the building foundation and OWTS are not completed within one (1) year of the commencement of construction, the permit, including any variances or decisions issued through the variance process or by the Director, shall expire. The Director may waive this expiration requirement for good cause.

2. Where a permit for an OWTS for New Building Construction has been issued relating to the development of property and construction of the building foundation or OWTS was initiated between November 10, 2008 and November 9, 2009 inclusive, the applicant shall have until June 30, 2013 within which to complete both the foundation and OWTS. If the building foundation and OWTS are not completed by June 30, 2013, the permit, including any variances or decisions issued through the variance process or by the Director, shall expire.

C. Expiration of Permits for OWTS Repairs - All permits for repairs to OWTSs issued in accordance with § 6.18(G) of this Part shall expire as follows:

1. Where a permit for OWTS repair is issued following the property owner's receipt of a Notice of Violation issued by the Department, all repair work must be completed within the time periods set forth in the Notice of Violation; and

2. In all other cases, permits for OWTS repair shall expire as specified in the permit itself. In no case shall any permit for a repair to an OWTS be valid for more than one (1) year from the date of issuance of the permit.

D. Expiration of Unconformed Installed Systems - OWTSs that have been installed but are not able to be conformed, as of the effective date of these rules, because the building sewer has not been connected through the building foundation to the interior plumbing or for other reasons shall be reviewed on a case-by-case basis.

E. Expiration of OWTS Suitability Determinations - OWTS Suitability Determinations may not be renewed. All OWTS Suitability Determinations issued in accordance with § 6.18(D) of this Part shall expire as follows:

1. All OWTS Suitability Determinations issued prior to the effective date of these rules shall expire five (5) years from the date of issue, or one (1) year from the effective date of these rules, whichever is later.

2. All OWTS Suitability Determinations issued after the effective date of these rules shall expire five (5) years from the date of determination, or concurrent with the expiration date of the building permit, whichever is later. Building permit must be issued within one (1) year of the date of the OWTS Suitability Determination.

6.47 OWTS Installation

A. License Required - Installation, construction, alteration, or repair of any OWTS shall be performed by an installer licensed in accordance with § 6.14 of this Part, or a master plumber licensed under R.I. Gen. Laws Chapter 5-20. This requirement does not apply to an applicant installing, constructing, altering, or repairing an OWTS to serve a building the applicant occupies or will occupy as the applicant's intended permanent domicile, provided that the applicant has obtained written permission for that work and has obtained the Director's approval of the plans and specifications for that work prior to the start of any construction.

B. Responsibilities of a Licensed Installer - A Licensed Installer shall adhere to the following:

1. Perform all work in compliance with approved plans and specifications only;

2. Report to the Licensed Designer discrepancies on an approved plan which the installer may note during construction;

3. Utilize only quality grade construction materials approved by the Director;

4. Utilize only the best construction techniques to provide for the best possible installations;

5. Work only under valid plans approved by the Director, and to commence work only after completely reviewing the entire approval including the application, the layout plans, all typical specification sheets, and other attachments;

6. Adhere to each and every term of approval as stipulated by the Director in his or her approval of the particular plan; and

7. Stop construction and notify the Licensed Designer if unanticipated conditions are encountered that indicate the OWTS cannot be installed in accordance with the approved application, plan and specifications, or any terms and conditions contained therein.

C. Responsibilities of a Licensed Designer - The Licensed Designer shall be responsible for witnessing and inspecting the installation of the OWTS that the Licensed Designer has designed. In no case shall the individual witnessing and inspecting the installation of the OWTS be the Licensed Installer who installs the OWTS, except for the repair of an OWTS. Any individual assisting a Licensed Designer in witnessing and inspecting the installation of an OWTS must be an employee of the same business entity as the Licensed Designer, and such individual must work under the Licensed Designer's direct supervision in respect to witnessing and inspecting the installation of the OWTS. The Licensed Designer shall be available to directly witness and inspect the system installation to resolve any instances of non-compliance, design conflicts resulting from changed conditions or other circumstances, or as may be requested by the Department. The Licensed Designer shall inform the owner, in writing, of any special conditions, operating requirements, or periodic maintenance needs associated with the installed OWTS.

D. Areas Served by Private Drinking Water Wells - Prior to installation of an OWTS in areas served by private drinking water wells, the Licensed Designer shall verify that conditions on site and adjacent to the site are the same as at the time of design approval, or have not changed in a manner that would affect the original design. If conditions have changed in a manner that would affect the original design, the Licensed Designer shall notify the Department prior to installation of the OWTS.

E. Notification to Department - The Licensed Designer shall notify the Department during normal business hours at least twenty-four (24) hours prior to the installation of any OWTS. The Department, at its discretion, may inspect any aspect of the installation. All Department-required inspections must be inspected by the Licensed Designer prior to notification to the Department.

F. Inspection - The Licensed Designer shall, at minimum, inspect and make measurements, where appropriate, of the following components and steps in the installation of the OWTS:

1. The exposed bottom of the excavation for the leachfield;

2. The size and condition of all structures such as the septic tank, distribution box, flow diffusers, etc.;

3. The elevation of all pipe inverts;

4. All sand media and aggregate is in accordance with specifications and is placed in accordance with the design plan;

5. Completed installation prior to covering;

6. The type of backfill and that the backfill is properly placed and compacted;

7. Final soil cover; and

8. All horizontal setbacks, including from the building and any wells on the site or on abutting lots.

G. Unforeseen Conditions - If conditions are encountered during construction which indicate that the OWTS cannot be installed or is not installed in accordance with the permit, or any terms and conditions contained therein, the Licensed Designer shall notify the Director as soon as possible, but no later than twenty-four (24) hours after discovery. The Department shall maintain written guidance on specifications for construction tolerances as well as conditions under which as-built plans and redesigned plans are required. The Licensed Designer shall stop construction if conditions are such that a redesign is required. Notification is not required if all design elements are within the tolerances established by the Department through written guidance. In response to the designer's notification, the Director shall either:

1. Authorize the Licensed Designer to proceed with the work onsite and to provide appropriate documentation to the Department as may be required by the Director;

2. Require the Licensed Designer to submit as-built plans within ten (10) business days after the OWTS is installed to record changes that are in compliance with the standards in these rules, but which need to be documented; or

3. Require the Licensed Designer to submit redesigned plans and specifications to the Director for approval showing changes from the original approved application, plan and specifications.

H. Installation Verification - The Licensed Designer shall collect the information in § 6.47(H)(1) through (4) of this Part that can be used to verify that the installation of the OWTS was performed as specified. The Licensed Designer shall keep this information on file for a minimum of ten (10) years from the date of the Certificate of Construction in § 6.48 of this Part. At the Department's request, the Licensed Designer shall make this information available for review.

1. Daily inspection report (weather conditions, individuals onsite, work accomplished, and other information customarily included in inspection reports);

2. A minimum of two photographs of the OWTS being installed, which must include the bottom bed and the completed system prior to covering;

3. List of all materials used, their source, and the dates delivered to the site; and

4. Product specification sheets, if different from those specified in the approved design.

I. Replacement Designer - An applicant may apply to the Director for approval to have a Licensed Designer, other than the one that designed the OWTS, be responsible for witnessing and inspecting the installation under the conditions specified in §§ 6.47(I)(1) and (2) of this Part. The Director may grant the approval provided the replacement Licensed Designer has a license issued in accordance with §§ 6.10 and 6.11 of this Part authorizing the Licensed Designer to design the type of OWTS in question, and the replacement Licensed Designer signs an affidavit assuming full responsibility for installation of the OWTS in accordance with the DEM issued permit.

1. An applicant may apply to the Director for a replacement Licensed Designer in either of the following circumstances:

   a. The Licensed Designer of the OWTS is incapable of witnessing and inspecting the OWTS;

   b. The Licensed Designer of the OWTS is unavailable or absent after a period of thirty (30) days as confirmed by the Department; or

   c. The applicant contracted with a business entity for design services and the Licensed Designer who prepared the OWTS design is no longer employed by that business entity.

2. An applicant may choose to select a replacement Licensed Designer for reasons other than those in § 6.47(I)(1) of this Part, in which case the applicant must submit a redesign prepared by the replacement Licensed Designer. Any variance previously approved by the Department shall remain valid, provided that the Department agrees that the circumstances and facts regarding the variance are the same as the facts under which the original variance was granted or that the variance in the redesign represents less of a deviation from the rules than the original variance.

J. Certificate of Construction - The Licensed Designer that is responsible for the OWTS installation shall complete a Certificate of Construction in accordance with § 6.48 of this Part. The Certificate of Construction shall not be construed to release the Licensed Installer from liability.

K. Once the Licensed Designer has certified that the OWTS has been properly installed and is operational, the Licensed Designer shall provide information and recommendations to the applicant in writing on specific OWTS operation and maintenance practices, including those needed to reduce the risk of premature failure and avoid pollution of the waters of the State.

L. The Licensed Designer is not responsible for any negligent act or omission of a user of an OWTS, including but not limited to, failure to properly use and maintain the OWTS, which causes damage to the OWTS.

6.48 Certificate of Construction

A. Certificate of Construction Required - The Licensed Designer that is responsible for the OWTS installation in accordance with § 6.47 of this Part shall complete a Certificate of Construction that certifies that the OWTS was installed in conformance with the approved application, plans, specifications, applicable statutes and regulations and that the License Designer is responsible for having witnessed and inspected the installation. The Certificate of Construction shall be on forms approved by the Director. The Certificate of Construction shall include, but not be limited to, the following:

1. Name and license number of the Licensed Designer;

2. Name and license number of the Licensed Installer; and

3. Distances from two building foundation corners to the septic tank manhole, to the distribution box, and to the leachfield corners.

B. Submittal to Department - The Certificate of Construction shall be submitted to the Director within five (5) business days after the OWTS, building foundation, drinking water well, and other appurtenances, as may be specified in written Department guidance, have been constructed in accordance with the design plan. If an operations and maintenance agreement is required pursuant to the terms of the permit a copy of the agreement shall be submitted to the Department with the Certificate of Construction. The Licensed Designer who performs the witnessing of an OWTS installation may not withhold issuance of the Certificate of Construction provided the requirements of this § 6.48 of this Part are met. The Licensed Designer shall provide a copy of the Certificate of Construction to the property owner.

6.49 Certificate of Conformance

A. The applicant for an OWTS permit shall obtain a Certificate of Conformance from the Department prior to use of any OWTS. The Certificate of Conformance means that the OWTS that has been installed appears to substantially conform with the design requirements and other requirements as indicated on the application and associated plans and specifications.

B. Any applicant who constructs a new building or building improvement which requires a new or altered OWTS and a Certificate of Occupancy prior to use shall obtain a Certificate of Conformance prior to such occupancy.

C. A municipality may only grant a Certificate of Occupancy pursuant to R.I. Gen. Laws § 23-27.2-13 and Chapter 23-27.3, where the person applying for such Certificate of Occupancy presents to the municipality the written Certificate of Conformance of the Director as required in § 6.49(A) of this Part.

D. The OWTS permit remains valid once the Certificate of Conformance has been issued.

6.50 Permit Suspensions and Revocations

A. Applicability - The Director may suspend or revoke any permit granted under these rules in the event that subsequent examination reveals that the application is incomplete, incorrect or not in compliance with these rules, or any conditions at the site are such that the approved design is no longer in accordance with these rules.

B. Notice - The applicant shall be given written notice by certified mail, return receipt requested, of such action to suspend or revoke a permit by the Director. Such notice shall be in conformance with the Administrative Procedures Act, R.I. Gen. Laws §§ 42-35-9(b) and 42-35-14.

C. Request for Hearing - An applicant may request a hearing on the suspension or revocation with the Department of Environmental Management, Administrative Adjudication Division. Such request must be in writing and shall be filed with the Department’s Administrative Adjudication Division within thirty (30) calendar days of receipt of the notice of permit suspension or revocation.

D. Cessation of Work - Upon issuance of a suspension or revocation of any permit from the OWTS Program, no construction activity may be performed or continue to be performed on the property until such time as the suspension or revocation is rescinded or released by the Director. Where the applicant requests a hearing in accordance with § 6.50(C) of this Part, the suspension or revocation shall be stayed. However, any and all work performed on the property shall be at the applicant's own risk.

E. Investigations - The Director shall conduct an investigation of any signed, written complaint received from any person regarding an application for an OWTS. The complaint shall specify the nature of the problems and include all appropriate information to allow the Director to evaluate the complaint.

6.51 Variance Requests

A. Applicability - Applications for the approval of plans and specifications for an OWTS may include a request for a variance from the provisions of the Rules Establishing Minimum Standards Relating to Location, Design, Construction, and Maintenance of Onsite Wastewater Treatment Systems. Requests for variance will not be required for OWTS Applications for Alteration to a Structure where there will be no increase in wastewater flow or OWTS Applications for Repair.

B. Requests for variances shall be attested to by a Class II or Class III Licensed Designer.

C. Contents of Variance Request - Requests for variances shall be on forms approved by the Director. It is the applicant's responsibility to demonstrate by a preponderance of clear and scientifically valid evidence by means of a comprehensive analysis having a probative value that the requested variance(s) will not be contrary to the public health, the public interest or the environment. Applicants must comply with local ordinances, however, such compliance cannot be used to justify or support a variance request under these rules.

1. The comprehensive analysis shall provide adequate scientific and technical evidence on how the proposed design will mitigate potential adverse impacts on the following:

    a. Public health;

    b. Any surface water drinking water supply or tributary thereto and any public or private drinking water well and any associated transmission lines that may be affected, including the cumulative impacts of the system to the surrounding area;

    c. Any body of water including, but not limited to, impacts on groundwater or surface water quality and to the ability of the water body to support or maintain flora and fauna as well as other designated water uses;

    d. Public use and enjoyment of any recreational resource; and

    e. Surrounding persons or property as a potential cause of any public or private nuisance.

2. The comprehensive analysis shall include, but not be limited to:

    a. An analysis of any limiting conditions of the site;

    b. An analysis of the amount and characteristics of the wastewater discharged; and

    c. An analysis of the ability of the site to accept, transmit and treat wastewater.

3. The variance request(s) shall be accompanied by a list identifying the names and addresses of the local building official and all property owners within two hundred (200) feet of any component of the proposed OWTS for which a variance(s) has been requested.

4. Nothing herein shall prevent the Director from requesting additional information deemed necessary.

5. For OWTS located within two hundred (200) feet of the inland edge of the coastal shoreline feature bordering a tidal water area (corresponding to the jurisdiction of the Rhode Island Coastal Resources Management Council), the variance request shall be accompanied by a Preliminary Determination from the Coastal Resources Management Council.

D. Compensatory Mitigation - Other elements of the applicant's system design (in which no variance is requested) may result in greater protection of the public health and the environment than is required by meeting the minimum standards of these rules. In such case, the applicant may include how these elements of the system provide compensatory mitigation for the variance(s) requested as part of the comprehensive analysis required in § 6.51(C)(2) of this Part. Compensatory mitigation may be in the form of, but is not limited to: alternative or experimental technologies approved pursuant to § 6.41 of this Part provided such systems are not required by other rules herein, greater setback distances than required in § 6.23 of this Part, greater separation distances to groundwater than required in § 6.33(E) of this Part, reductions in design flow, reductions in pollutant loading on neighboring properties, decreasing the loading rate per square foot of leachfield, and decreasing the linear loading rate.

E. Cumulative Impact Assessment - Any application for an OWTS proposed to be installed on a lot less than ten thousand (10,000) square feet in area which requires more than one (1) variance and which will be located within one hundred (100) feet of any public or private drinking water well will not be approved unless a Cumulative Impact Assessment of the variances is conducted by the applicant and submitted to the Department along with the variance request. The Cumulative Impact Assessment shall include, but not be limited to: a description of all abutting properties identifying the location of all OWTSs, surface waters, wetlands, and private or public drinking water wells; a concise description of all variances granted in the permitting of these abutting OWTSs; and any additional information which the Director may deem appropriate.

F. Notification Requirements

1. Once the applicant's plans and specifications have been determined to be complete by the Department, the applicant shall notify the local municipal building official and all property owners within two hundred (200) feet of any component of the proposed OWTS of the pending application for an OWTS with variance(s). If a variance is requested from the minimum setback requirement to a public water supply well, public water line or a surface water reservoir including tributaries and tributary wetlands or subsurface drains directly discharging thereto, then the applicant shall also notify the applicable public water system entity or agency.

2. Exemptions from Notification Requirements

a. OWTS applications for Alteration to a Structure that include a request for a variance from the provisions of these rules are exempt from the notification requirements in § 6.51(F) of this Part.

b. The Director may waive the notification requirements in § 6.51(F) of this Part if the variance request is limited to a variance from a provision of these rules specifying horizontal setbacks from a feature on the applicant's property only.

c. The Director may waive the notification requirements in § 6.51(F) of this Part if, in the opinion of the Director, the variance request will be denied based on the information submitted, or lack thereof, or based on the standards in § 6.52(B)(2) of this Part.

3. Each notice shall include:

a. A copy of the Variance Request Form(s) submitted to the OWTS Program;

b. A cover letter conforming to a form to be provided by the Director, which shall include at least the following information:

(1) The application number;

(2) A statement of the purpose of the notification;

(3) A certificate of service; and

(4) A statement advising the recipient that the recipient may, within twenty (20) days of the date specified in the certificate of service, provide the Director with written comments or information bearing upon the subject application; and

c. Reduced-scale site plans identical to those submitted to the DEM OWTS Program.

4. All notices shall be forwarded by certified mail, return receipt requested. The applicant shall clearly mark each return receipt with the application number and the words “Variance Request.”

5. When all certified receipts have been returned to the applicant, copies of each cover letter, accompanied by the appropriate certified receipt, shall be filed with the OWTS Program along with a letter requesting that the application be submitted to the variance review process for final review and determination.

6. If a correctly addressed, certified notice is returned to the applicant, the applicant may submit the returned envelope and certified receipt, unopened, along with the other return receipts as proof of the applicant’s good faith attempt to serve the notice.

G. Redesign Applications - For redesign applications submitted to the Department, any variance request previously approved by the Department shall remain valid, provided that the Department determines that either:

1. The circumstances and facts regarding the variance are the same as the facts under which the original variance was granted; or

2. The variance in the redesign represents no greater deviation from the rules than the original variance.

6.52 Variance Review Process

A. Preliminary Review and Recommendation - All variance requests shall be reviewed by the Department for the purpose of determining whether such variance(s) would be contrary to the public health, the public interest or the environment. In reviewing the applicant's variance requests, the Department may consult with other experts, whether employed by the Department or not. As part of the review of any variance request(s), the Department shall consider:

1. All evidence submitted by the applicant, the local municipal building official and the notified property owners bearing upon the subject application;

2. The number and extent of the limiting conditions at the site and surrounding area; and

3. Whether the site characteristics are less than optimum for wastewater treatment and dispersal.

B. Variance Review Standards

1. Approval - A variance request from the minimum standards set forth in these rules shall be approved if it is determined that such a variance(s) will not be contrary to the public health, the public interest, or environmental quality.

2. Denial - A variance request from the minimum standards set forth in these rules shall be denied when:

a. The applicant has failed to provide clear, accurate, and substantive information to enable the Department to determine that the requested variance will not be contrary to the public health, the public interest, or environmental quality;

b. The evidence fails to demonstrate that the same degree of environmental protection provided under these rules can be achieved without strict application of the provision for which the variance has been requested;

c. The evidence demonstrates that the OWTS will not function as proposed in the application;

d. The evidence indicates that the approval of the OWTS would otherwise be contrary to the public health, the public interest, or environmental quality; or

e. The variance request is for one of the following:

(1) The variance request is for an action that is prohibited in § 6.9 of this Part, excluding the prohibition regarding holding tanks in § 6.9(O) of this Part;

(2) The variance request is from the requirements of § 6.15(B) of this Part on a site located in the Salt Pond or Narrow River Critical Resource Areas unless the applicant demonstrates that a net reduction in overall, long-term nitrogen loading to the watershed will result;

(3) The variance request resulted from the applicant subdividing the property after December 31, 1995 unless the applicant demonstrates that the reason for the variance requested is not the result of action by the applicant, or prior owners of the property;

(4) The variance request is from the requirement that soil and seasonal high groundwater table data must have been determined within the past five (5) years;

(5) There is a public wastewater system reasonably accessible to the structure to be served by the OWTS;

(6) The variance request is for new lots under ten thousand (10,000) square feet platted or otherwise created after June 18, 1992 unless the applicant demonstrates that the reason for the variance requested is not the result of action by the applicant, or prior owners of the property;

(7) The variance request is for less than the eighty (80) foot minimum setback distance from a private drinking water well in § 6.23(E) of this Part, Note 3;

(8) The variance request is from the two hundred (200) foot public well setback requirement for a drilled rock, driven, or dug well in § 6.23(E) of this Part or from the four hundred (400) foot public well setback from a gravel packed or gravel developed well in § 6.23(E) of this Part. Such a variance request may be approved if either of the following occurs:

(AA) If the public well is not on the same property that is subject to the OWTS Application, the applicant provides documentation that the well owner has an approved variance from the Rhode Island Department of Health for an inner protective zone that does not include the location of the proposed OWTS; or

(BB) If the public well is on the same property that is subject to the OWTS Application, the applicant provides documentation that the Rhode Island Department of Health has approved of the requested activity;

(9) The variance request is for a depth to groundwater from original ground surface of less than twelve (12) inches or for a depth to a restrictive layer or bedrock of less than thirty-six (36) inches;

(10) The variance request is from the nitrogen reducing technology requirements in the Salt Pond and Narrow River Critical Resource Areas in § 6.43(B) of this Part; or

(11) The variance request is from the requirements in § 6.45 of this Part (Nitrogen Loading in Areas of Onsite Drinking Water Wells).

3. Terms and Conditions - The variance decision may contain such terms and conditions as the Director deems necessary to protect the public interest, the public health, or the environment.

C. Recommended Determination - Upon completion of their review, the OWTS Program Staff shall prepare a written recommendation of approval or denial of the variance request. The review shall identify the factors considered in the review process, specify the bases for their recommendation, and identify any suggested conditions for approval.

D. Final Determination - Upon review of the recommendation submitted in accordance with § 6.52(C) of this Part, the Director shall render a final written decision approving or denying the requested variance(s). In arriving at a final decision, the Director may:

1. Adopt the recommendation, with or without additional written comments or conditions;

2. Reject the recommendation; in which case the Director shall render a written decision specifying the bases for the rejection; or

3. Remand the matter back to the OWTS Program Staff for further review and consideration of certain specified factors.

6.53 Appeals

A. Right to Appeal - Any person whose permit application is denied may appeal to the Director for review of the decision on which the denial is based by filing an appeal with the Administrative Adjudication Division.

B. Filing of Appeal - All appeals shall be in writing and shall be filed with the Department's Administrative Adjudication Division within thirty (30) calendar days of receipt of the denial of the subject application.

C. Contents of Appeal - Every appeal shall contain:

1. A detailed basis upon which the appeal is taken;

2. A plat plan of the area of the subject application;

3. A list of the names and addresses of:

a. The applicant;

b. The municipality in which the property is located;

c. The owner of any surface water supply as identified by § 6.42(C) of this Part, if applicable; and

d. The owners of record of real property within two hundred (200) feet of any component of the applicant's proposed OWTS; and

4. A certified check, bank draft or money order in the amount of one thousand five hundred ($1,500) dollars in accordance with § 6.54(D) of this Part.

D. Notice of Administrative Hearing - Upon the filing of an appeal with the Administrative Adjudication Division, and once the hearing schedule allows, the Administrative Adjudication Division shall notify the following, by first class mail, of the date, time and place of the adjudicatory hearing, in conformance with R.I. Gen. Laws § 42-35-9: the applicant; the municipality in which the property is located; the owner of any surface water supply as identified by § 6.42(C) of this Part, if applicable; and the owners of record of real property within two hundred (200) feet of any component of the applicant's proposed OWTS.

E. Conduct of Hearing - The notice and conduct of the hearing by the Department of Environmental Management, Administrative Adjudication Division, shall comply in all respects with the provisions of the Administrative Procedures Act, R.I. Gen. Laws Chapter 42-35, and the Rules of Practice and Procedure for the Administrative Adjudication Division for Environmental Matters, Part 20-00-1 of this Title.

F. Burden of Proof - At the adjudicatory hearing, the applicant shall have the burden of proof to demonstrate through clear and convincing evidence that:

1. A literal enforcement of the rules will result in unnecessary hardship;

2. That the OWTS will function as proposed in the application; and

3. That the issuance of a permit will not be contrary to the public interest, public health and the environment. In order to demonstrate that the proposed OWTS will not be contrary to the public interest, public health and the environment, the applicant must introduce clear and convincing evidence to the satisfaction of the Director that:

a. The waste from the proposed OWTS will not be a danger to public health;

b. The OWTS to be installed will be located, operated and maintained so as to prevent the contamination of any drinking water supply or tributary thereto;

c. The waste from the proposed OWTS will not pollute any body of water or wetland;

d. The waste from the proposed OWTS will not interfere with the public use and enjoyment of any recreational resource; and

e. The waste from the proposed OWTS will not create a public or private nuisance.

G. The Director may approve a permit or grant a variance from a provision of these rules, except for the prohibitions in § 6.9 of this Part, where it is determined by the Director that:

1. A literal enforcement of such provisions will result in unnecessary hardship to the applicant;

2. That the OWTS will function as proposed in the application; and

3. That the permit or variance sought will not be contrary to the public interest, public health and the environment.

H. The decision of the Director may contain such terms and conditions as deemed necessary to protect the public interest, public health and the environment.

6.54 Fees

A. Administrative

1. All applicants, except for state and local governmental entities, shall be liable for the payment of fees to the Department as set forth below.

2. Payment of Fees - All fees shall be due at the time the initial form or request is submitted to DEM requesting that it undertake one of the activities specified in § 6.54(B) of this Part below. The Department will not undertake any such activity until payment has been received.

3. Commercial OWTSs - For the purpose of assessing fees, all duplex and multi-family residential OWTSs shall be considered commercial OWTSs.

4. Field testing pursuant to §§ 6.16 or 6.17 of this Part must be completed on the scheduled day of witnessing. Conditions encountered or lack of preparedness by the Licensed Designer that requires additional witnessing by the Department will require an additional fee.

B. Fee Schedule

DESCRIPTION	FEE
Soil Evaluations	$150.00 per OWTS
Wet Season Determinations	$100.00 per OWTS
Bedrock Test Holes	$100.00 per OWTS
Test Holes in Storm Deposited Sand or Human Transported Material	$100.00 per OWTS
Reinspection	$100.00
Application for OWTS Suitability Determination	$100.00
OWTS Application for New Building Construction and OWTS Application for Alteration to a Structure. The fees for applications utilizing a pretreatment technology, excluding leachfield systems and components, approved as an Alternative or Experimental Technology pursuant to § 6.41 of this Part or a technology not included in these rules specifically engineered for the application, shall be two (2) times the following fees: (The fee for a Joint OWTS/Freshwater Wetlands Application is the sum of the OWTS fee and the Wetlands Preliminary Determination fee.)	
Single Family Residences:	
Single Family Residence	$150.00
Commercial OWTSs:	
Less than 2,000 gpd	$200.00
2,000 gpd to 4,999 gpd	$500.00
5,000 gpd to 9,999 gpd	$1,000.00
10,000 gpd or More	$2,000.00

DESCRIPTION	FEE
Subdivision Review	
1 to 9 Lots	$100.00 per lot
10 Lots or More	$1,000.00 plus $50.00 per lot for each lot over 10
OWTS Application for Repair. The fees for applications utilizing a pretreatment technology, excluding leachfield systems and components, approved as an Alternative or Experimental Technology pursuant to § 6.41 of this Part or a technology not included in these rules specifically engineered for the application, shall be two (2) times the following fees:	
Single Family Residence	$100.00
Commercial OWTSs:	
Less than 2,000 gpd	$150.00
2,000 gpd to 4,999 gpd	$300.00
5,000 gpd to 9,999 gpd	$600.00
10,000 gpd or More	$1,000.00
Application Transfer, including Joint OWTS/Freshwater Wetlands Application	$50.00
Any Variance Request for OWTSs: Residential and Commercial (Variance Request Fee is in addition to the application fee)	$300.00
If the application has been previously reviewed by the Department and found deficient and the re-submission does not address these deficiencies, then the Department will assess a fee for the second re-submission equal to fifty percent (50%) of the original fee. In no case shall this resubmission fee exceed $300.00.	
Alternative or Experimental Technology:	

DESCRIPTION	FEE
Alternative OWTS or Technology:	
Class One	$1,000.00
Upgrade from Class Two to Class One	$500.00
Class Two	$1,000.00
Alternative OWTS Component:	
Class One	$200.00
Class Two	$300.00
Experimental OWTS or Technology	$2,000.00
Renewal of Alternative or Experimental Technology Application:	
Alternative OWTS or Technology Class Two	$500.00
Alternative OWTS Component Class Two	$150.00
Experimental OWTS or Technology	$1,000.00
Approval Modification	$200.00
Installer's Licenses:	
Examination and New License Application (3 years, the Department may pro-rate fee if the license is issued for less than 3 years)	$175.00
License Renewal (3 years, the Department may pro-rate fee if the renewal is for less than 3 years)	$150.00
Class I, II, III, and IV Licenses:	
Examination and New License Application (3 years, the Department may pro-rate fee if the license is issued for less than 3 years)	$200.00
License Renewal (3 years, the Department may pro-rate fee if the renewal is for less than 3 years)	$150.00

DESCRIPTION	FEE
License Renewal Late Fees	
<1 year expired	$100.00
1-2 years expired	$200.00
2-3 years expired	$300.00

C. Additional Fees - These additional fees shall be collected prior to the Department's review of the submission(s) under consideration. No final approval or denial shall be issued by the Director until such time as these additional fees have been received.

DESCRIPTION	FEE
Designers Affidavit Continuing Validity - per lot	$50.00
Designers Affidavit – Subdivisions	$100.00
Revision to Subdivision (1 to 9 lots) per lot	$50.00
Revision to Subdivision (10 or more lots)	$500.00
As Builts - Requested or Submitted	$50.00
Redesign - Single Family	$100.00
Redesign - Commercial - less than 2,000 gpd	$150.00
Redesign - Commercial - more than 2,000 gpd	$400.00
Redesign – Joint OWTS/Freshwater Wetlands Application	$150.00

D. Costs of Appeal - Any person who requests an appeal pursuant to § 6.53 of this Part shall also be liable for fees to cover costs incurred in the holding of the hearing. The fee shall be sufficient to defray the costs incurred by the Administrative Adjudication Division for, but not limited to: all investigations; the appearance of a stenographer and the original transcript; renting a room, when necessary; and the costs associated with the appearance of the hearing officer. The applicant must pay the Director the sum of one thousand five hundred dollars ($1,500.00) as a deposit against the actual costs of a hearing before a hearing will be scheduled.

6.55 Operation and Maintenance

A. Operation - It is the property owner's responsibility to ensure that the OWTS achieves the performance requirements applicable to the approved OWTS. Where required by an Alternative or Experimental Technology approval or under the terms of the approved OWTS Application, the property owner shall maintain a valid operations and maintenance agreement for the life of the OWTS.

B. Maintenance - All OWTSs shall be maintained in good repair by the owner. The Director may order the owner to maintain or repair an OWTS within a reasonable time if the Director finds them to be in need of the same. In order to maintain long-term viability of the OWTS, it is the owner's responsibility to:

1. Ensure that the OWTS is used only for wastewater in amounts that do not exceed the design flow;

2. Properly maintain the OWTS, including but not limited to, inspection of the OWTS or pumping of the septic tank as needed;

3. Protect the OWTS from physical disturbance;

4. Ensure that all access opening covers are secured and maintained; and

5. Ensure that trees and shrubs are not growing within the area of the leachfield and within ten (10) feet of the leachfield.

C. The provisions of §§ 6.55(A) and (B) of this Part for operation and maintenance apply to any OWTS that has been issued a Certificate of Conformance pursuant to § 6.49 of this Part.

D. Future Modifications - Once a Certificate of Conformance has been issued pursuant to § 6.49 of this Part, nothing in these rules shall prevent the property owner from retaining another qualified Licensed Designer, including another Licensed Designer from the same business entity that originally designed the OWTS, that the property owner chooses to conduct work on the OWTS.

6.56 Removal and Abandonment

A. Removal - Any OWTS components that are excavated and removed off-site must be properly disposed of at a licensed solid waste landfill.

B. Abandonment On Site - Septic tanks, grease tanks, pump tanks, holding tanks, concrete chambers and cesspools that are no longer in use shall be properly abandoned. The structure shall be emptied of all wastes and then either removed, filled with clean sand or crushed and the area backfilled with clean soil.

6.57 Cesspool Phase Out

A. General - Cesspools are not an approved method of wastewater disposal in Rhode Island, and all existing cesspools are considered to be substandard in accordance with § 6.6(G) of this Part. Cesspools in Rhode Island must be removed and replaced if they meet the failure criteria in § 6.8 of this Part, meet the definition of a large capacity cesspool in § 6.8 of this Part, local government ordinances require removal and replacement, or if they are subject to the requirements of § 6.57(C) of this Part pursuant to R.I. Gen. Laws Chapter 23-19.15.

B. Large Capacity Cesspools - The use of large capacity cesspools is prohibited statewide in accordance with U.S. Environmental Protection Agency "Revisions to the Underground Injection Control Regulations for Class V Injection Wells", December 7, 1999, 40 C.F.R. §§ 9, 144, 145 and 146, incorporated above at § 6.7(E) of this Part. Any such large capacity cesspool shall cease to be used and shall be properly removed or abandoned in accordance with § 6.56 of this Part. Any large capacity cesspool shall be properly removed or abandoned within one (1) year of discovery unless an immediate public health hazard is identified, in which case the Director may require a shorter period of time.

C. Cesspool Removal and Replacement - Cesspools shall cease to be used for wastewater disposal and shall be properly abandoned in accordance with the schedule below in § 6.57(C)(1) through (3) of this Part. Any cesspool required to be abandoned pursuant to this Rule shall be properly abandoned in accordance with § 6.56 of this Part and such cesspool shall be replaced with an approved OWTS, or the building served by the cesspool shall be connected to a public wastewater system, prior to the applicable deadlines contained in this rule.

1. Any cesspool deemed by the Department or a System Inspector to be failed shall be properly abandoned within one (1) year of discovery unless an immediate public health hazard is identified, in which case the Director may require a shorter period of time.

2. Any cesspool found to be serving a building or use subject to sale or transfer shall be removed or abandoned within twelve (12) months of the date of sale or transfer. Should the manner of wastewater disposal be unknown, an inspection shall be conducted to determine if a cesspool is present on the property. This inspection shall be done by a System Inspector prior to the time of sale or transfer.

3. Any cesspool within two hundred (200) feet of the inland edge of a coastal shoreline feature bordering a tidal water area (corresponding to the jurisdiction of the R.I. Coastal Resources Management Council), or within two hundred (200) feet of a public drinking water supply well, or within two hundred (200) feet of a surface drinking water supply impoundment with an intake for the water supply, shall be removed or abandoned by January 1, 2014.

D. Temporary Hardship Extension - The Director may grant an extension for the removal and replacement requirements in § 6.57(C)(3) of this Part provided the homeowner demonstrates undue hardship and the cesspool is not a failed system. Undue hardship is defined as having an annual income of less than or equal to eighty percent (80%) of the appropriate household size area median income determined by federal Housing and Urban Development standards for the community within which the cesspool is located (Area median income data is available online at https://www.huduser.gov/portal/datasets/il.html). Requests for a hardship waiver shall be on forms provided by the Director and accompanied by all necessary financial information specified on the form. Said extension letter shall be recorded in the land evidence records of the municipality where the property is located. No extension shall extend beyond January 1, 2019. Any extension granted shall expire upon transfer or sale of the land or easement upon which the cesspool is located and any such cesspool shall be replaced within one (1) year of the transfer or sale or by January 1, 2019, whichever is sooner.

E. Exemptions

1. The provisions of § 6.57(C)(2) and (3) of this Part shall not apply to any cesspool located in an area of a community covered by a municipal onsite wastewater management ordinance that requires the risk-based phase-out of cesspools prior to January 1, 2014. The Department shall maintain a list of exempt communities.

2. The provisions of § 6.57(C)(2) and (3) of this Part shall not apply to any cesspool located on a property that is properly designated to be served by a public wastewater system no later than January 1, 2020 provided that:

a. It is not a failed cesspool;

b. The sewering project is identified in the city, town or sewer district's wastewater facilities plan as approved by the Department prior to January 1, 2013;

c. The municipality, acting through its city or town council, states in writing to the Director by January 1, 2013 that the municipality will complete construction of the sewering project on or before January 1, 2020;

d. The property owner certifies, in writing, that the dwelling/building will be connected to the public wastewater system within six (6) months of receipt of the notification to connect to said system and that no increase in flow or number of bedrooms in the structure will occur until the connection is made; and

e. No later than December 31, 2014, the municipality holds bonding authorization or some other dedicated financial surety for expansion of the public wastewater system to the area of the building served by the cesspool. If the municipality fails to demonstrate such surety, exemption under § 6.57(E)(2) of this Part shall terminate and the cesspool shall be replaced by June 30, 2015.

6.58 Guidance Documents

A. Issuance - The Department is authorized to issue guidance documents that support the intent and purpose of these rules. Such guidance documents shall not serve to alter the intent of the rules herein. The documents may serve as guidance on interpreting the evolving science and technologies that are used to support the rules or to explain in further detail the administrative procedures for complying with these rules.

B. Review - Department prepared guidance documents shall be subject to review and comment through either formal public notice, the Technical Review Committee (§ 6.41(G)(2) of this Part), or through other Department convened stakeholder groups. Once a guidance document is issued by the Department, it shall be subject to, at minimum, an annual review, at which time all comments received within the past year shall be considered.

6.59 Figure 1: Leachfield Over Restrictive Layer or Bedrock

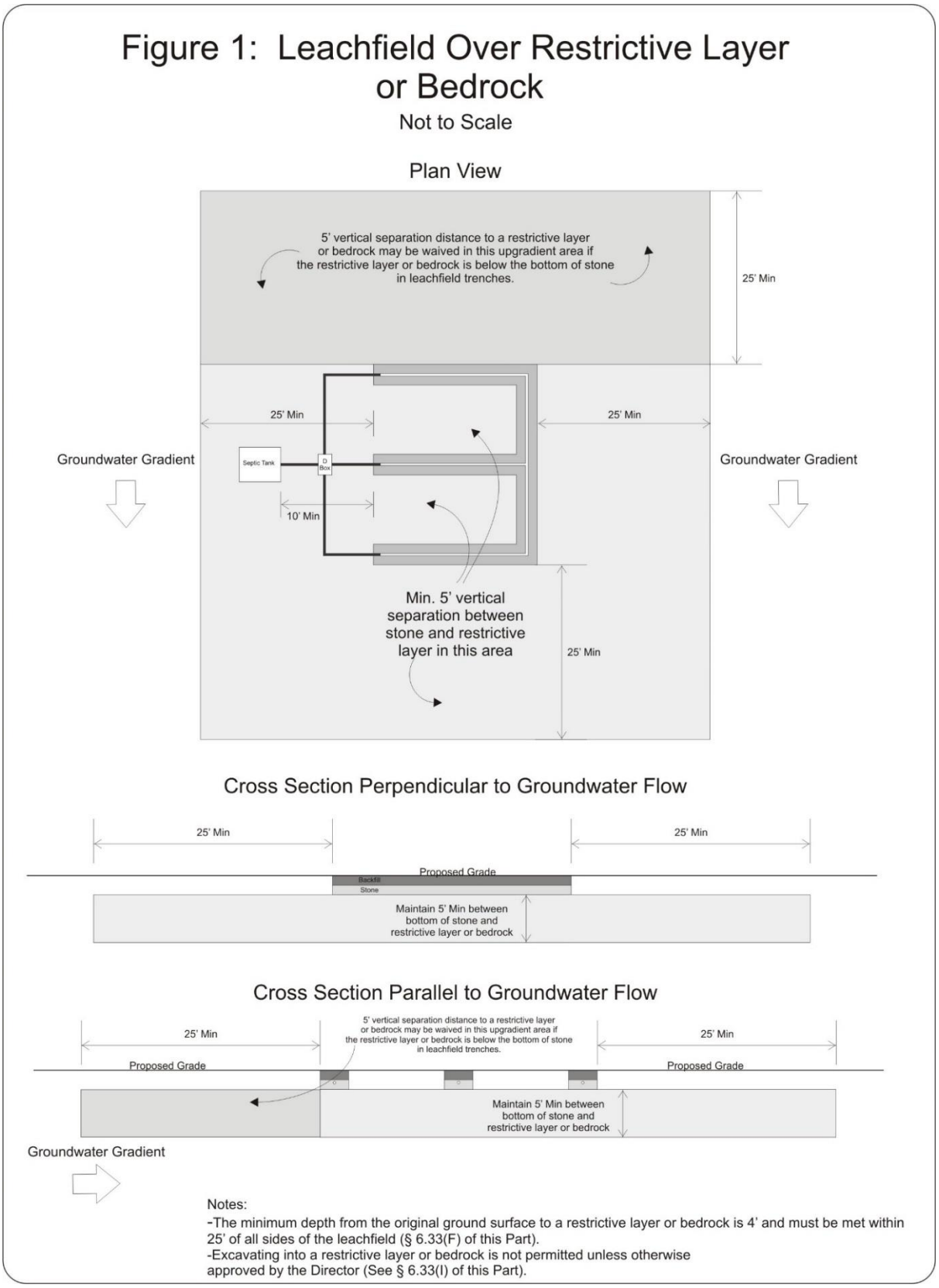

6.60 Figure 2: Minimum Setback Distances in Drinking Water Supply Watershed Critical Resource Areas

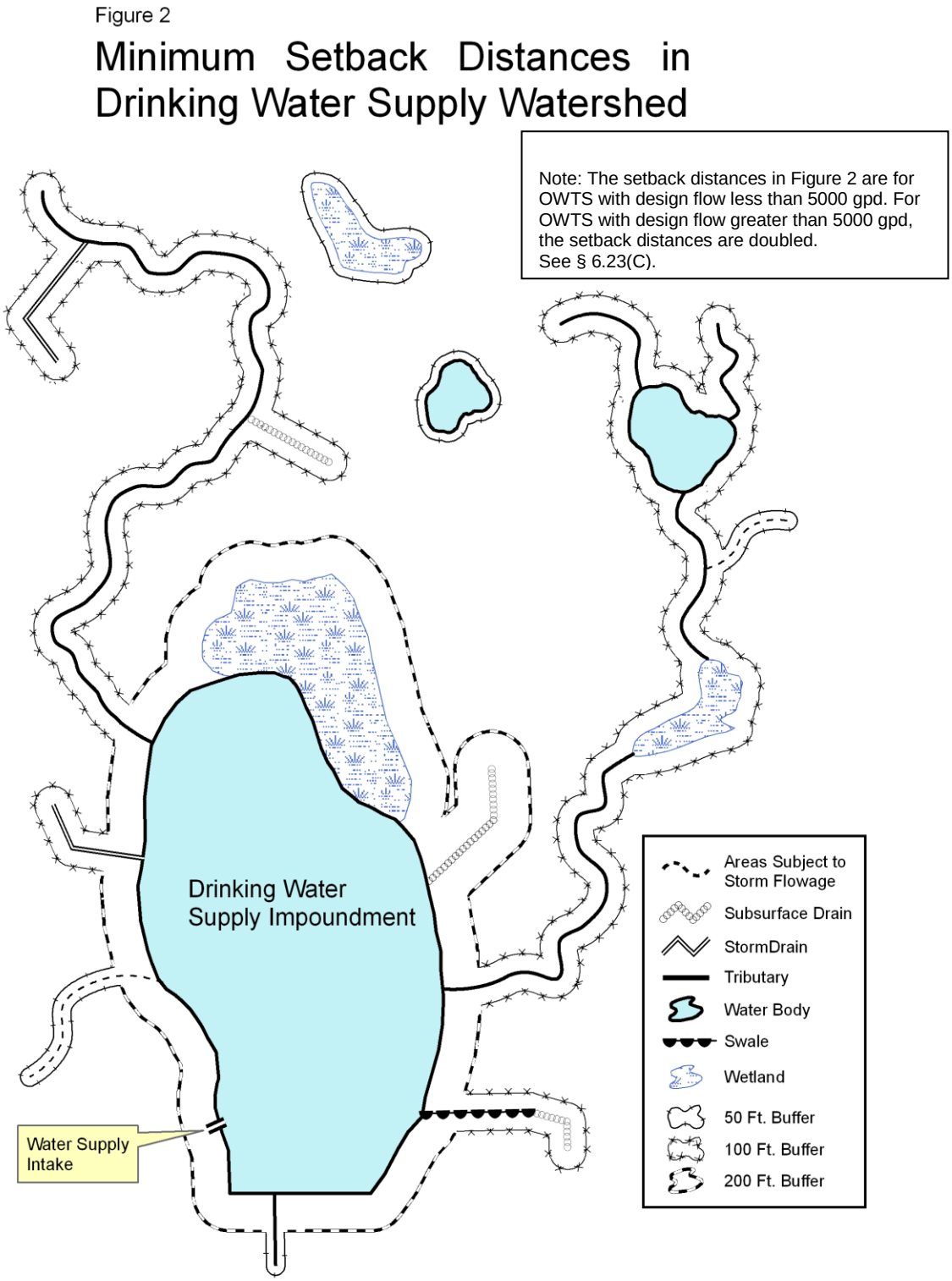

6.61 Figure 3: Minimum Setback Distances in the Salt Pond and Narrow River Critical Resource Areas

Figure 3

6.62 Figure 4: Grease Tanks

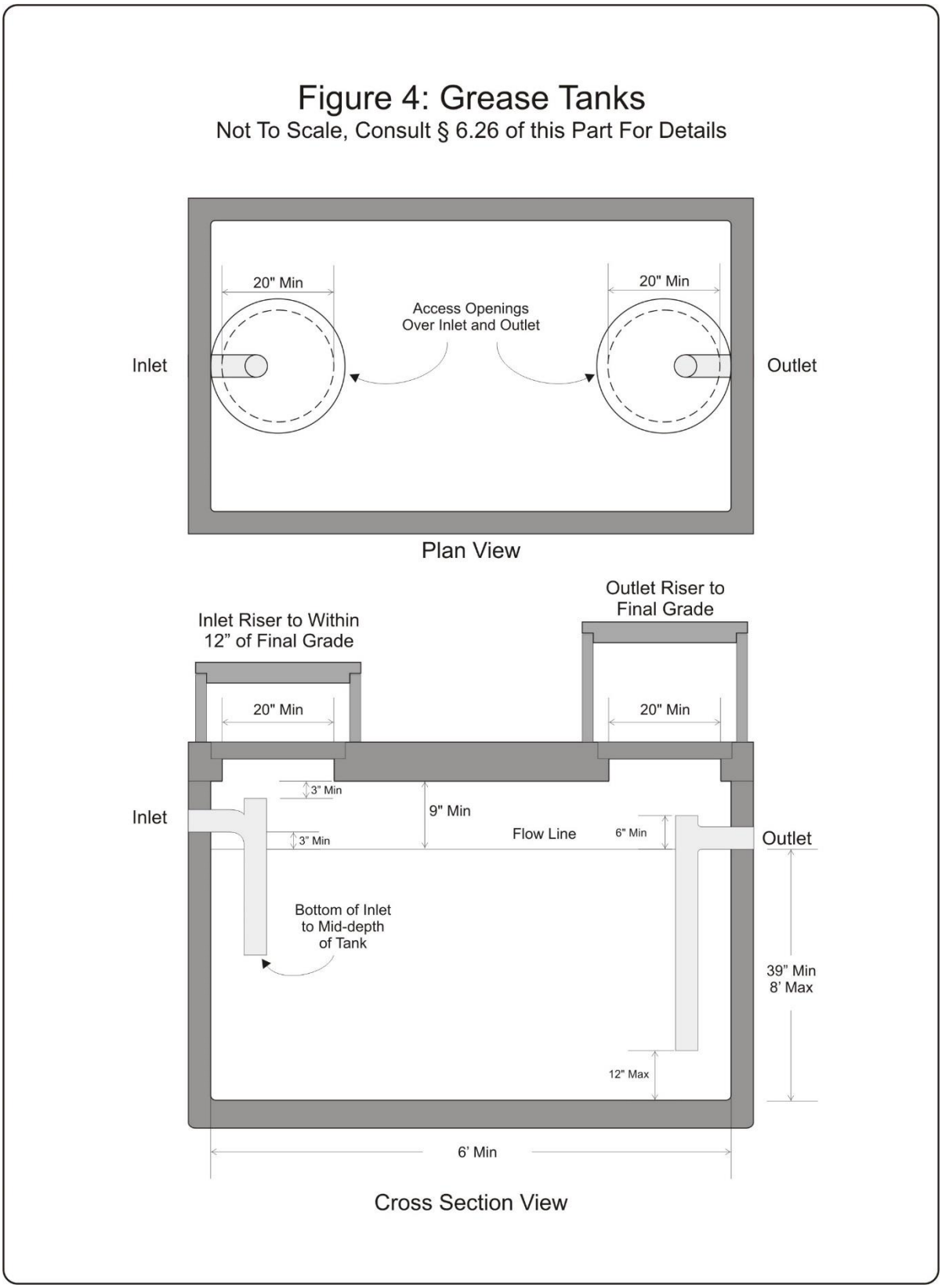

6.63 Figure 5: Septic Tanks

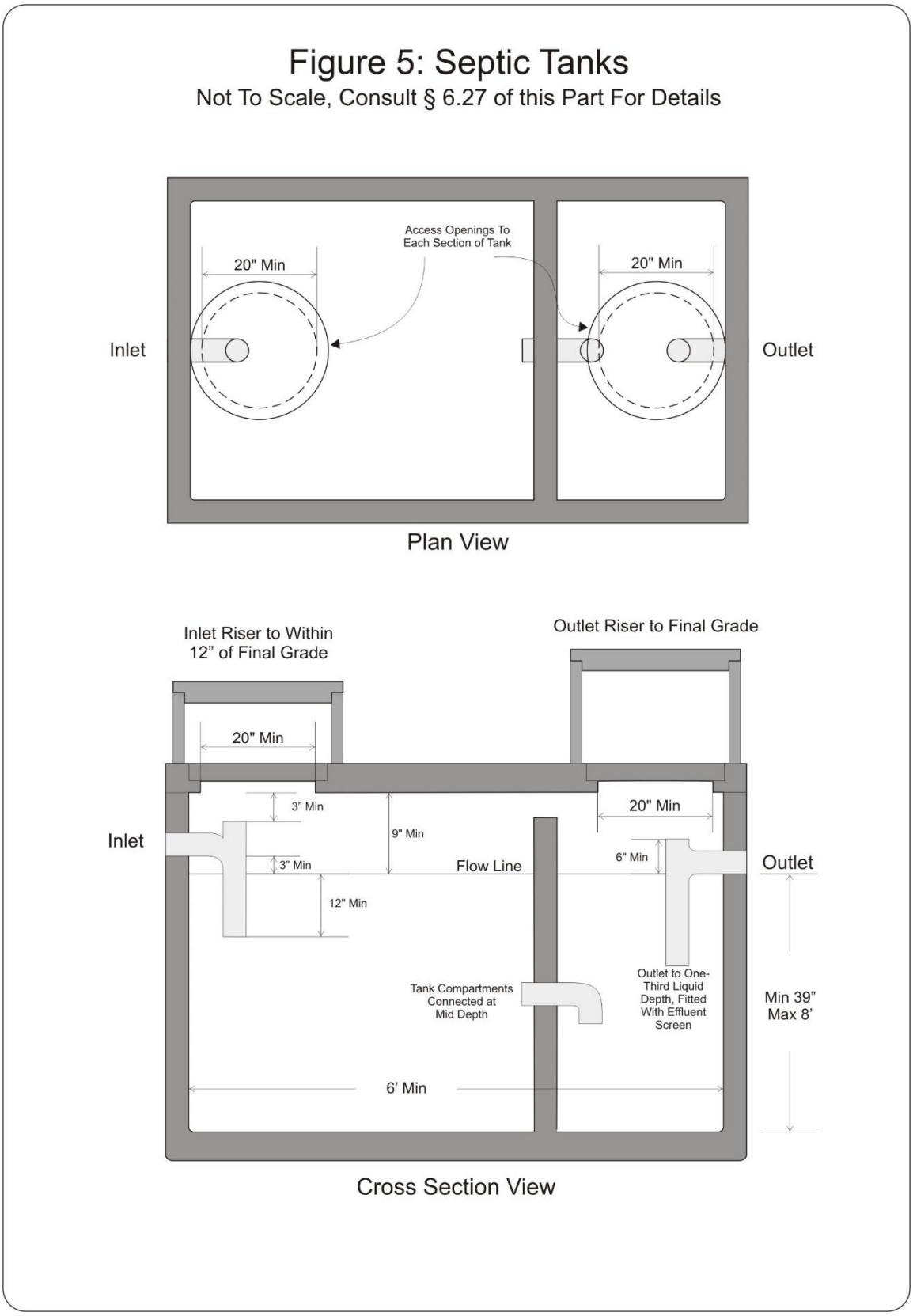

6.64 Figure 6: Septic Tank Riser Detail

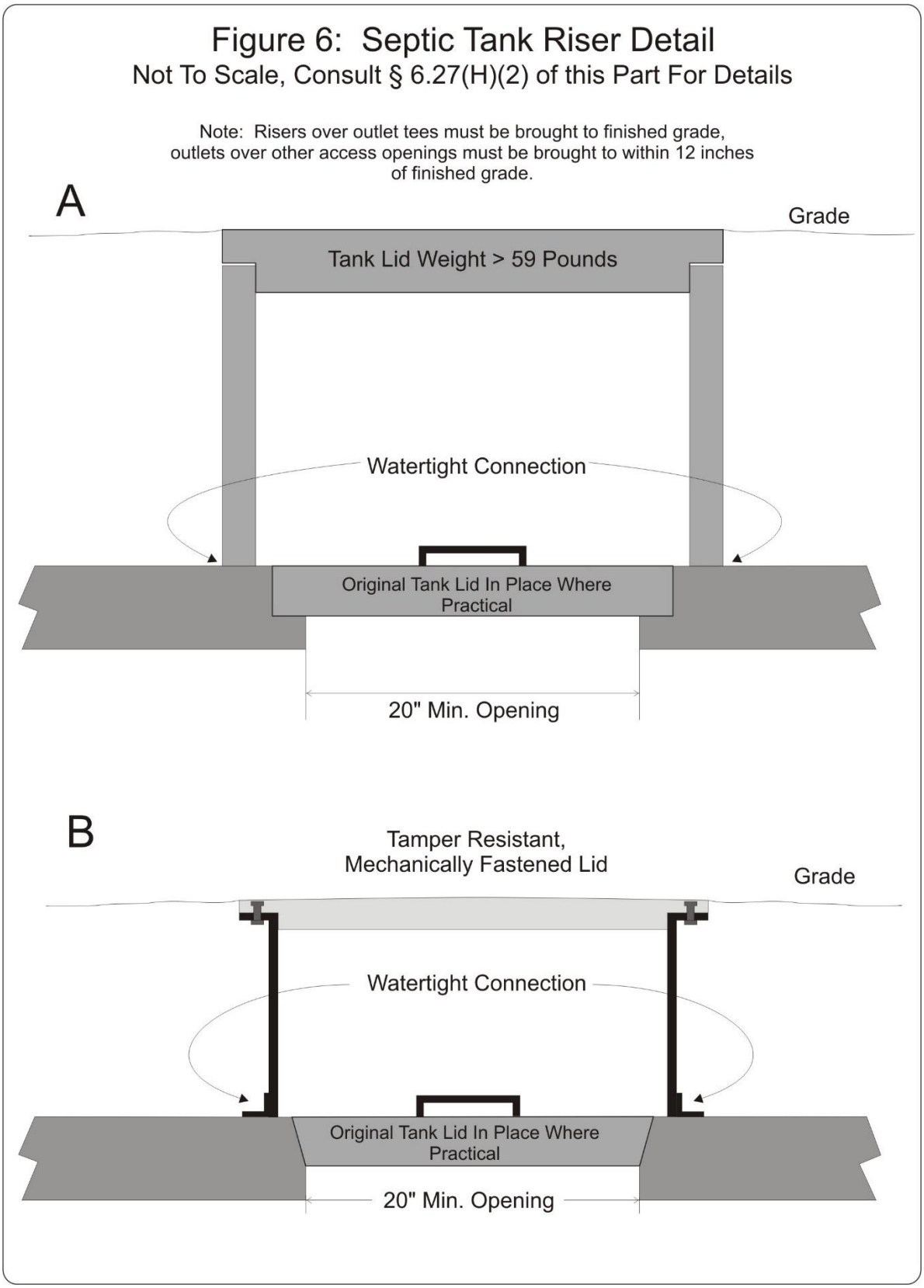

6.65 Figure 7: Leachfield Construction, Invert of Distribution Lines Below Original Grade

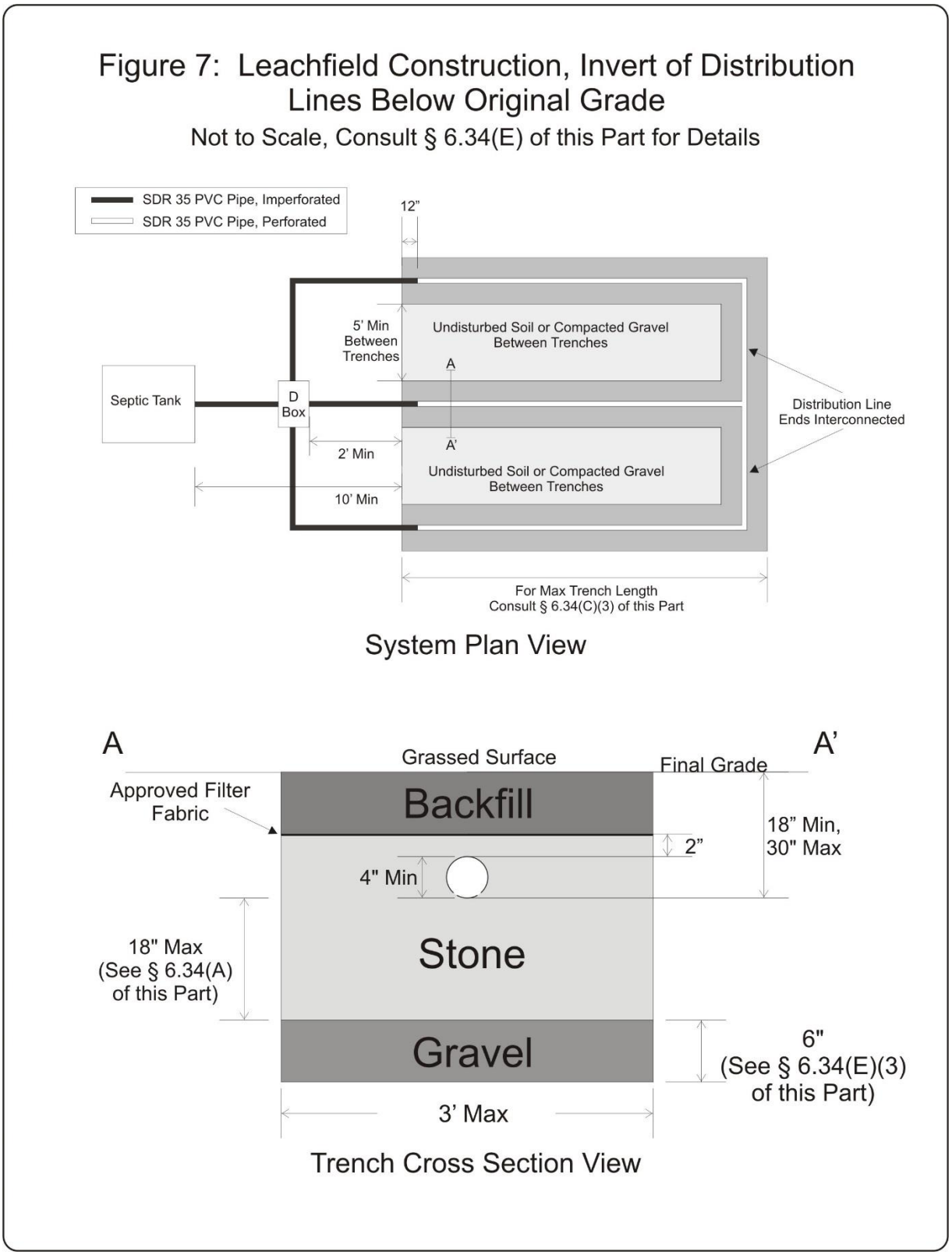

6.66 Figure 8: Leachfield Construction, Invert of Distribution Lines Above Original Grade

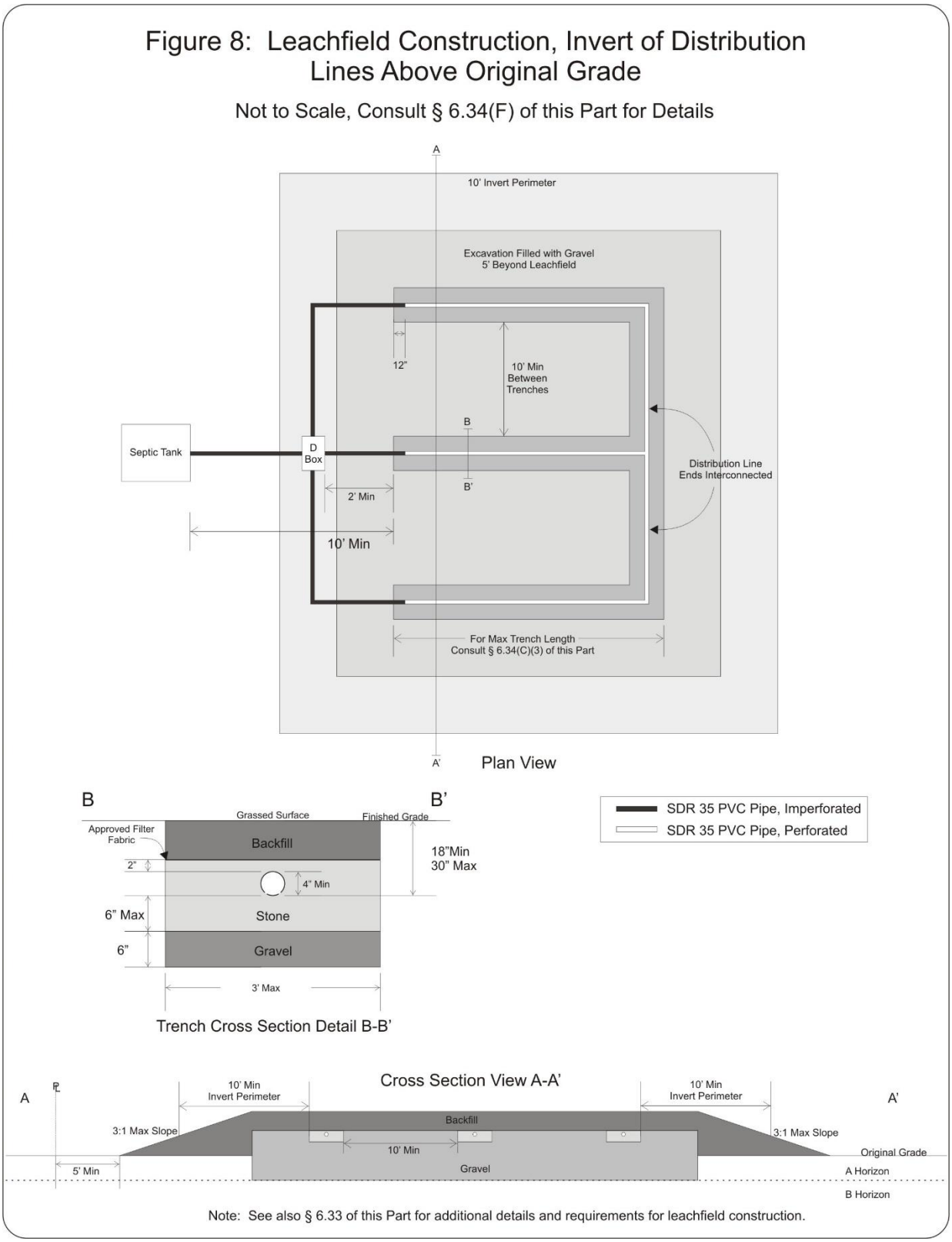

6.67 Figure 9: Leachfield Construction on Sloping Sites

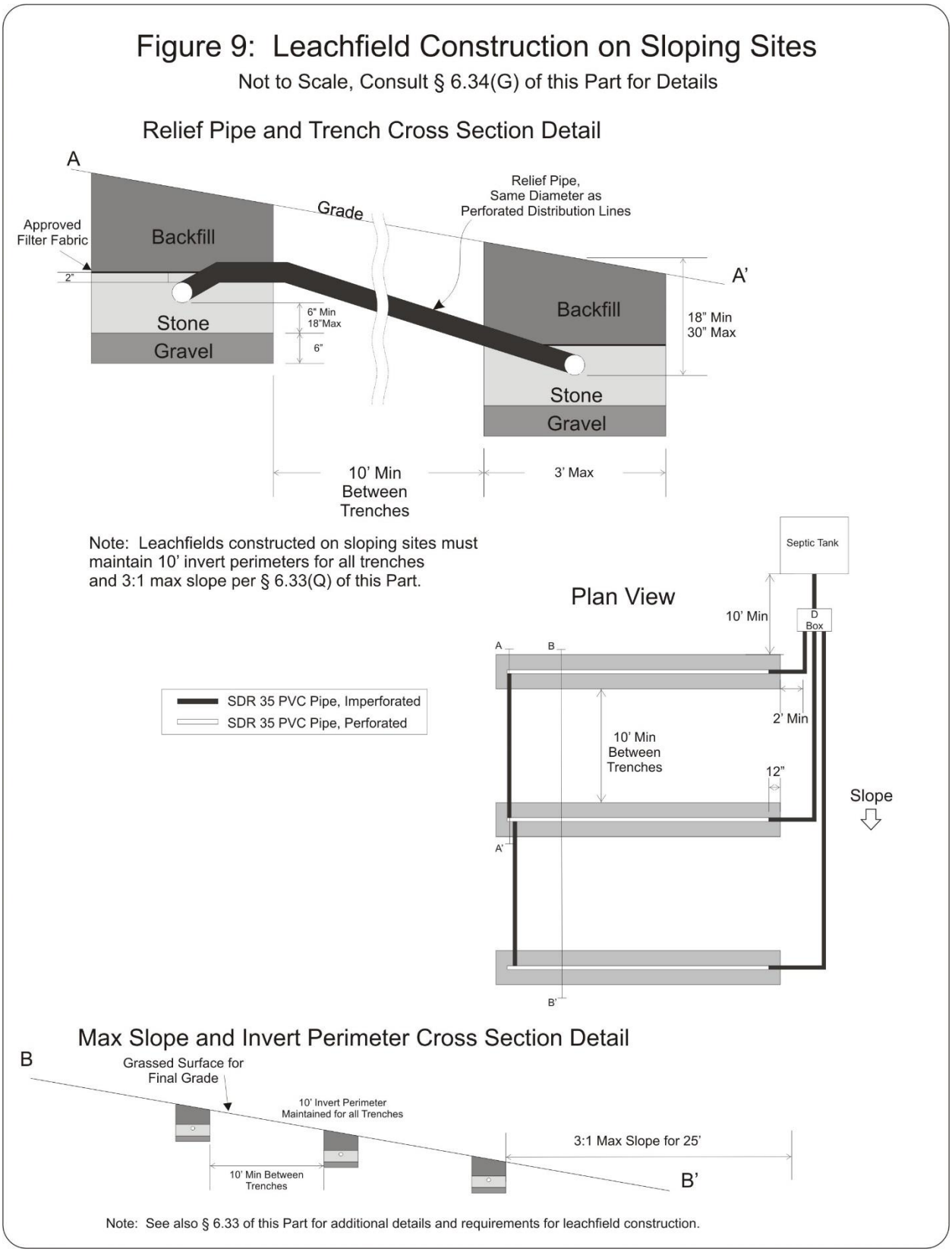

6.68 Figure 10: Shallow Concrete Chambers

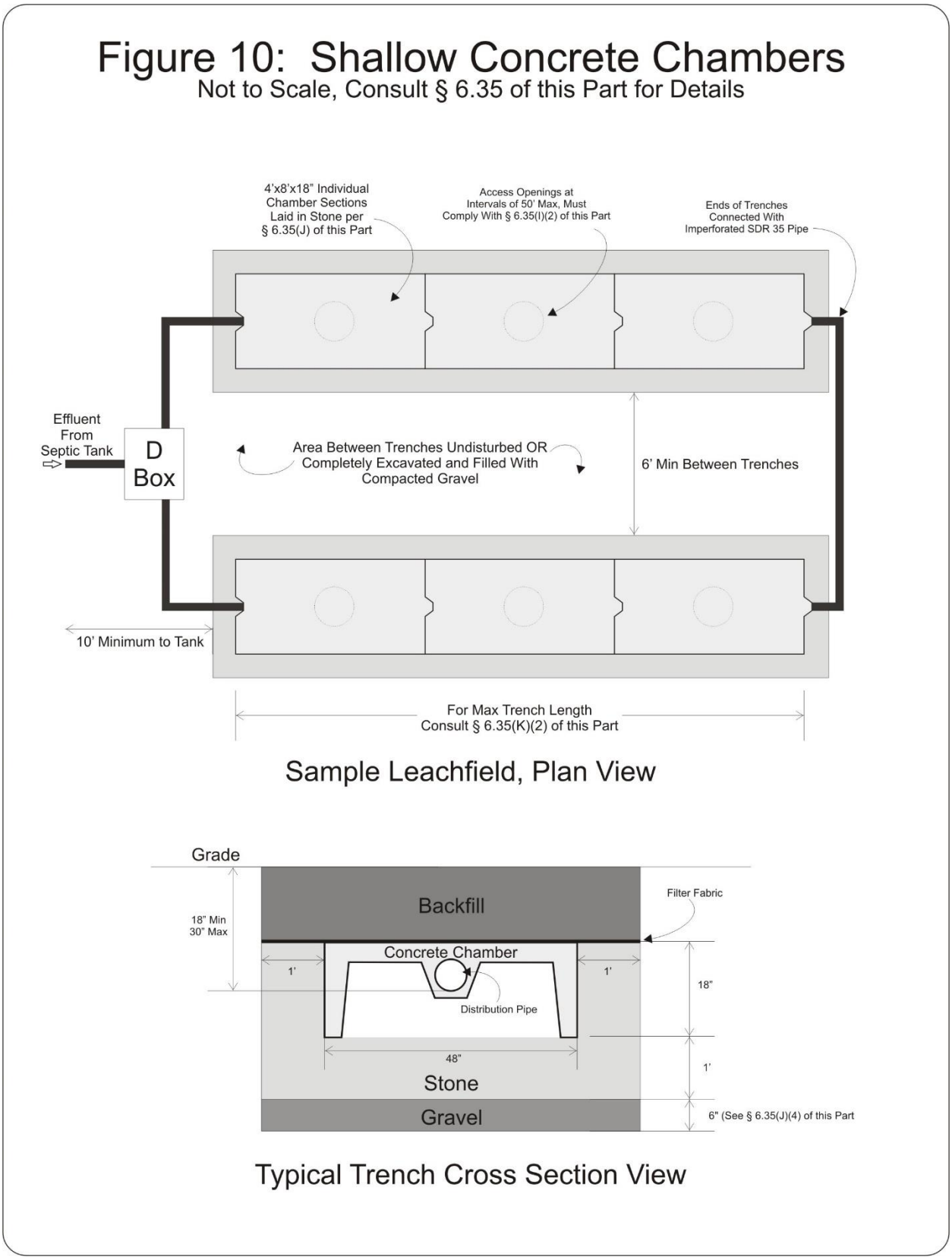

6.69 Figure 11: Category 1 Technology and Pressurized Drainfield Schematic

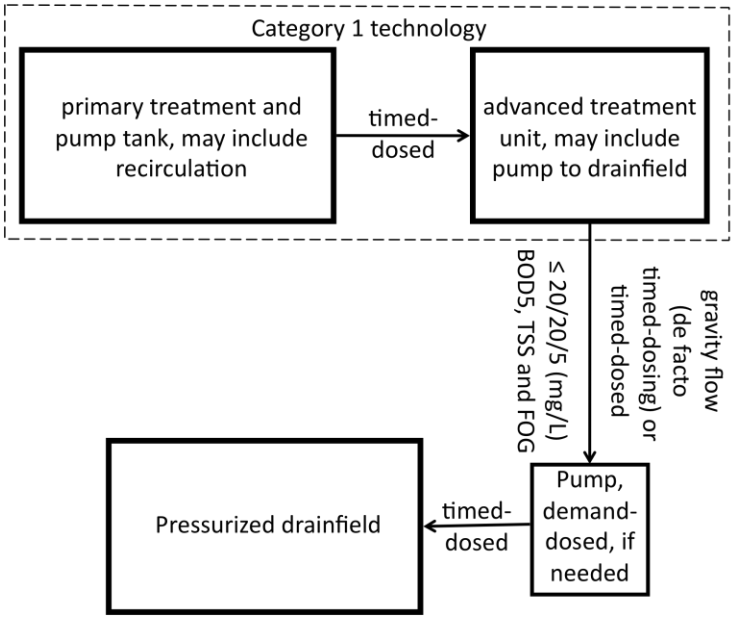

6.70 Figure 12: Category 2 Technology and Pressurized Drainfield Schematic

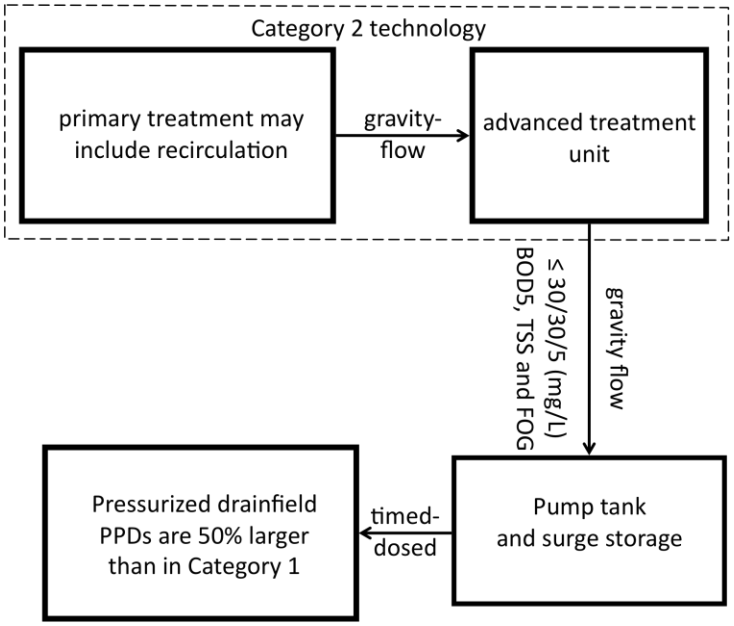

6.71 Figure 13: Demand Dosing Tank with Centrifugal Pump

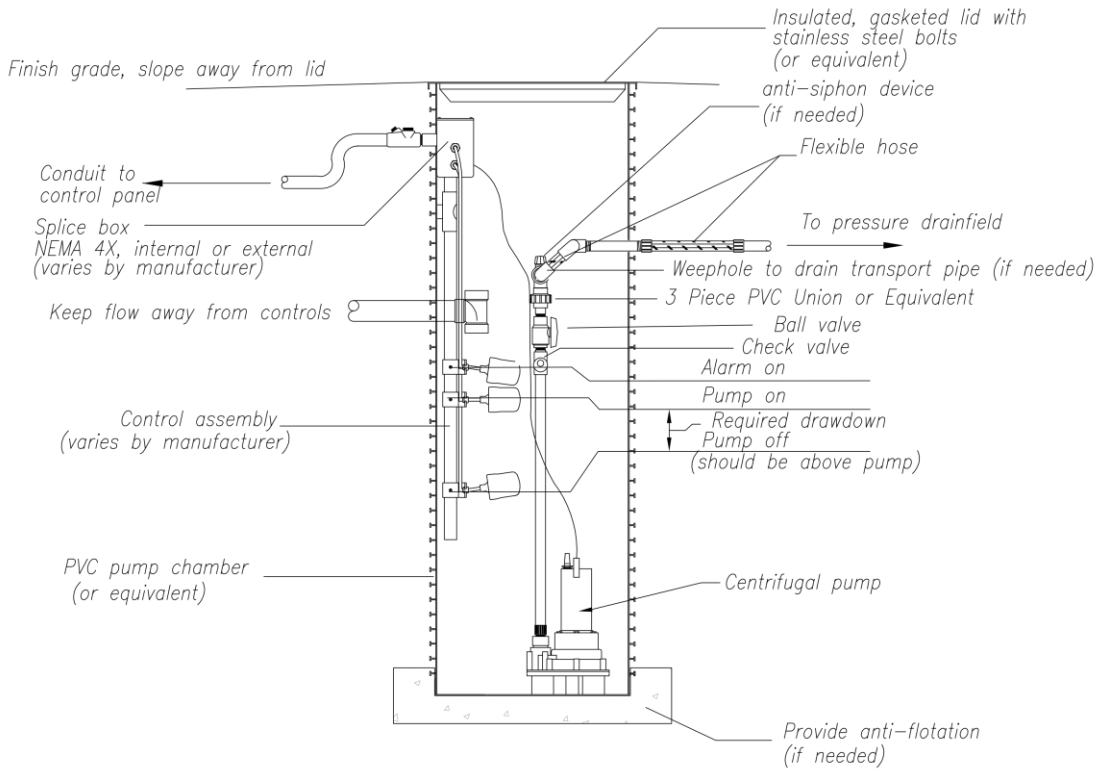

6.72 Figure 14: Demand Dosing Tank With Multi-stage Centrifugal Pump

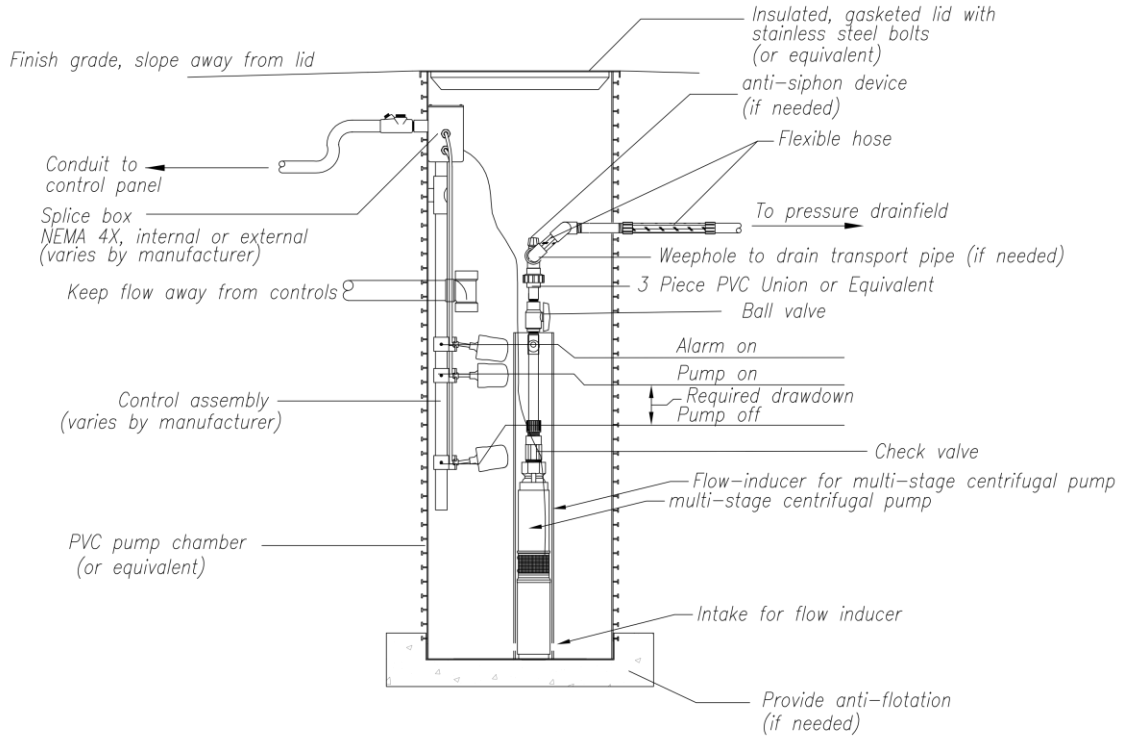

6.73 Figure 15: Timed-dosing Tank With Centrifugal Pump and In-line Screen

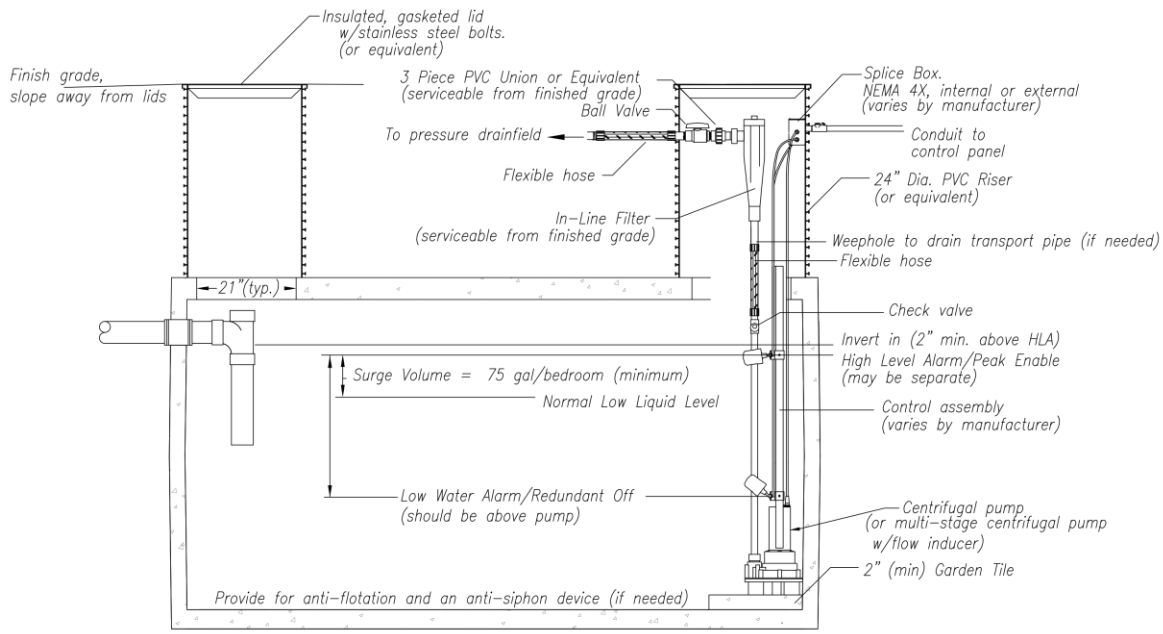

6.74 Figure 16: Timed-dosing Tank With Centrifugal Pump and Basket Screen

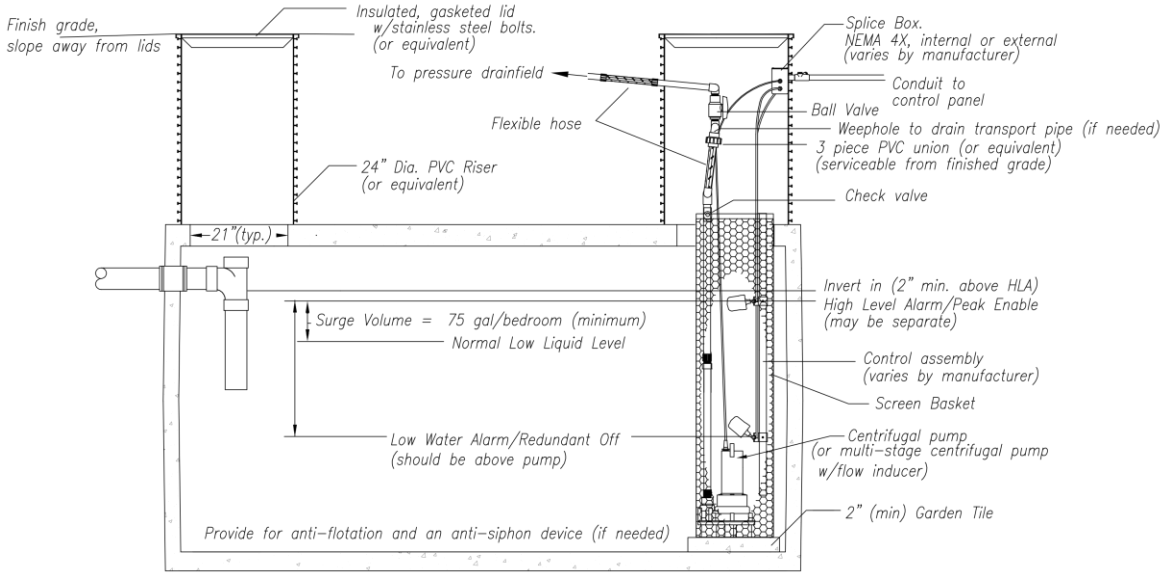

6.75 Figure 17: Timed-dosing Tank With Screened Vault and Multi-stage Centrifugal Pump

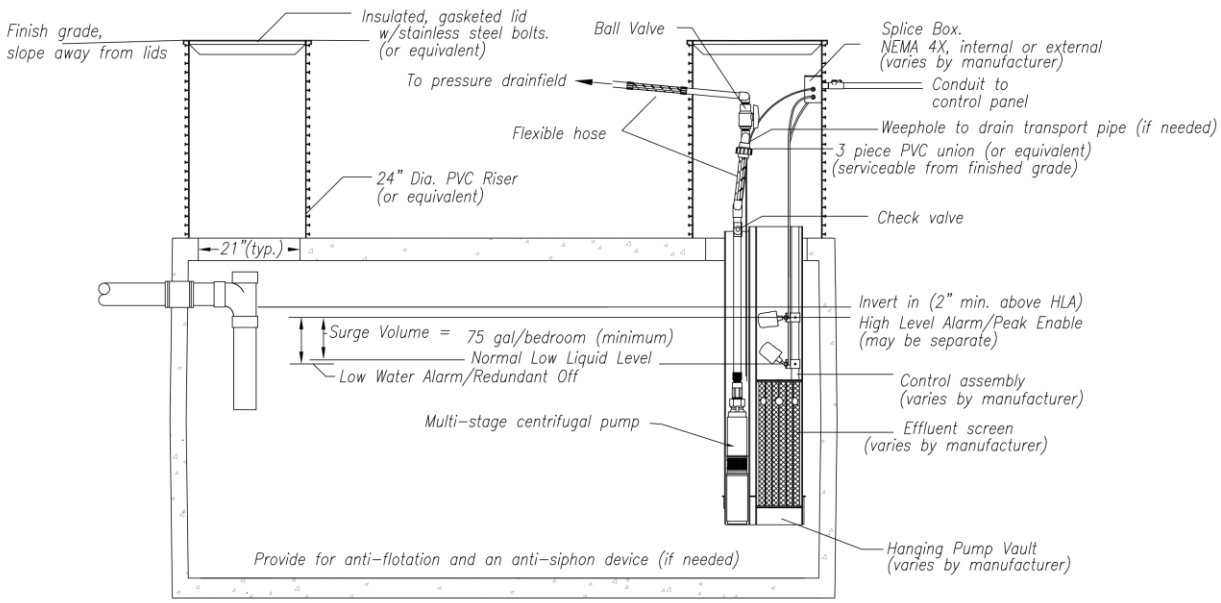

6.76 Figure 18: Above-ground Bottomless Sand Filter (Side View)

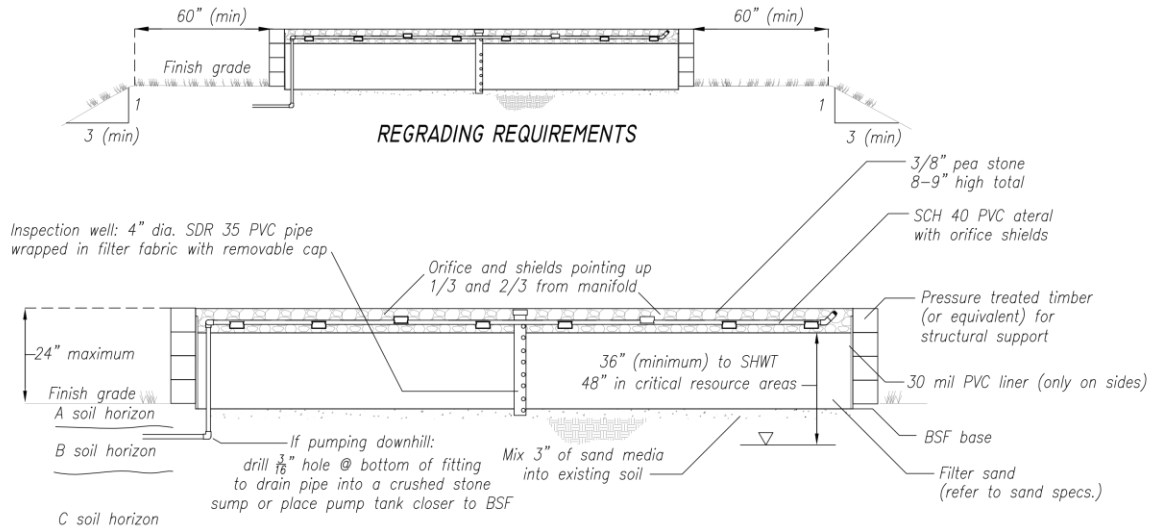

6.77 Figure 19: In-ground Bottomless Sand Filter (Side View)

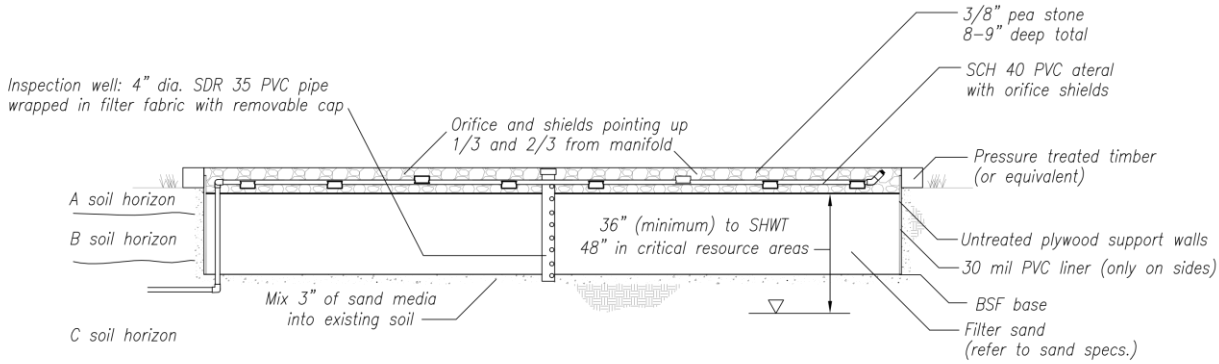

6.78 Figure 20: Typical Bottomless Sand Filter (Top View)

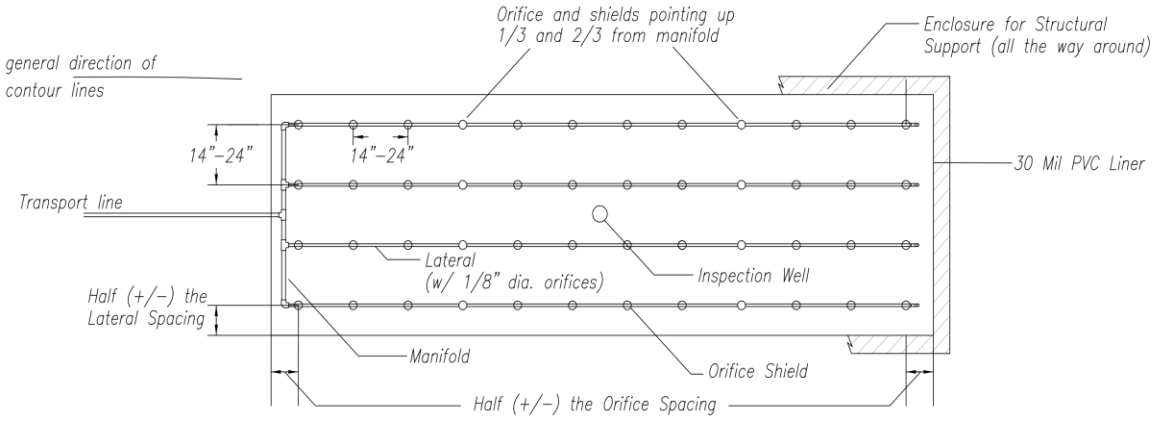

6.79 Figure 21: Side View Detail- Typical Bottomless Sand Filter

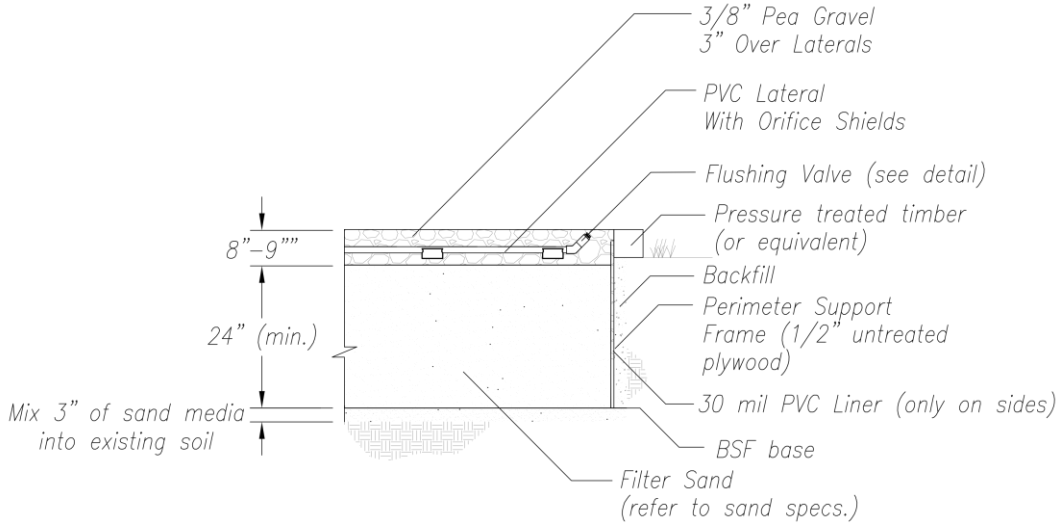

6.80 Figure 22: Orifice Shield Detail: Note: Shields shall be able to drain. Details vary from manufacturer.

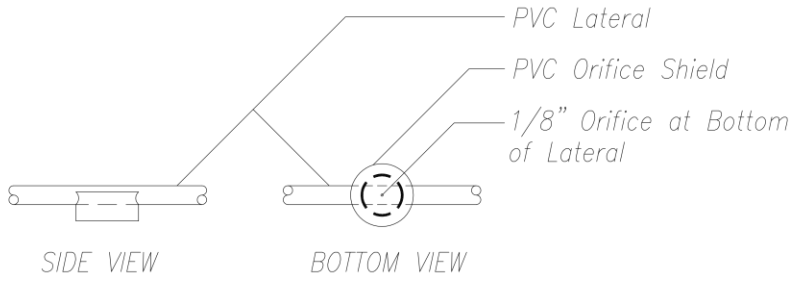

6.81 Figure 23: BSF Flushing Valve Choice Detail

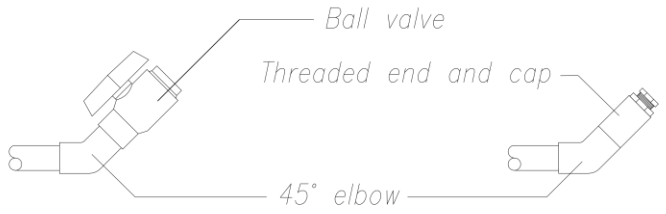

6.82 Figure 24: PSND Cross Section Details

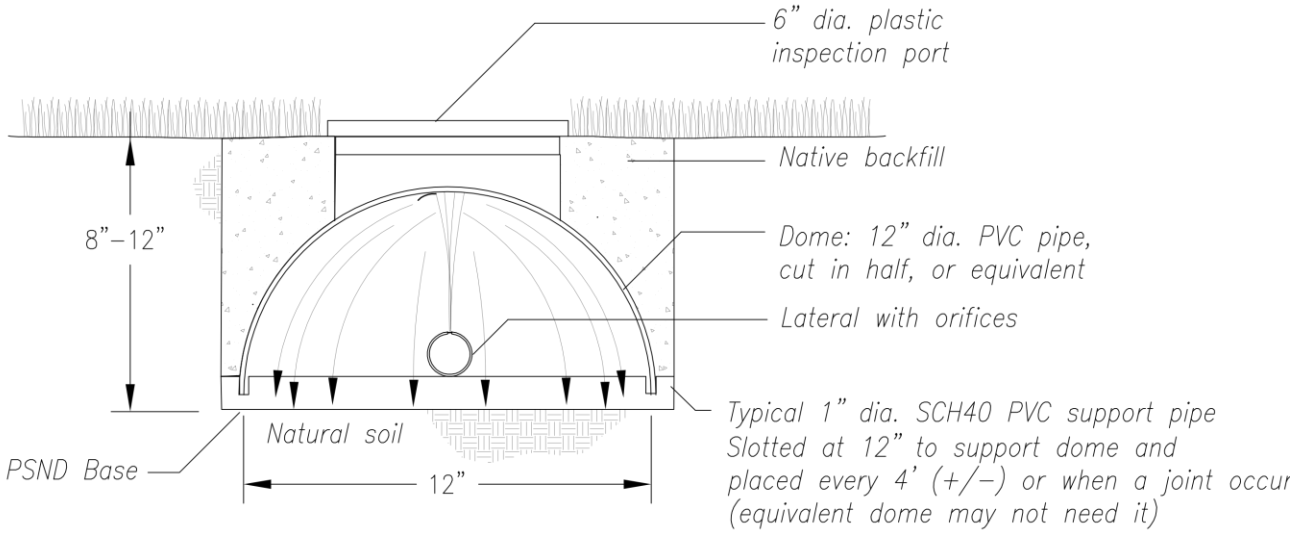

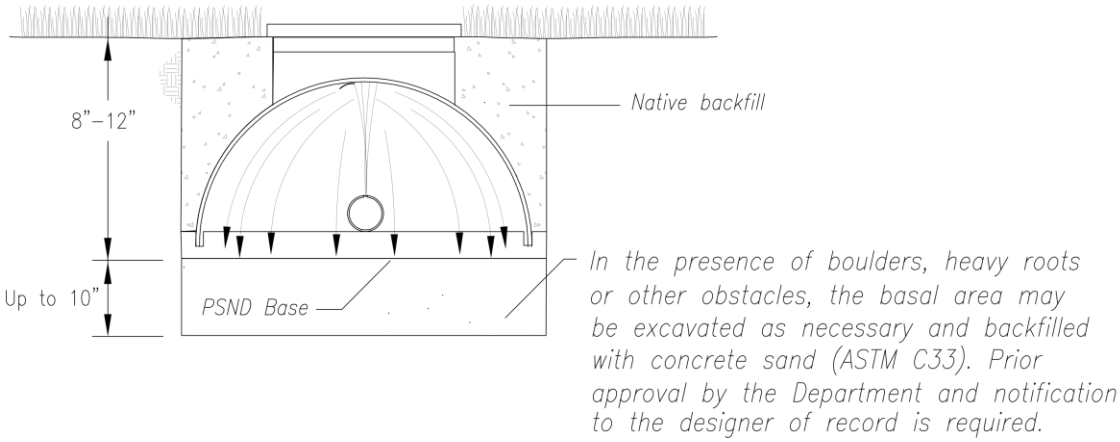

6.83 Figure 25: PSND Cross Section Detail (Long Side)

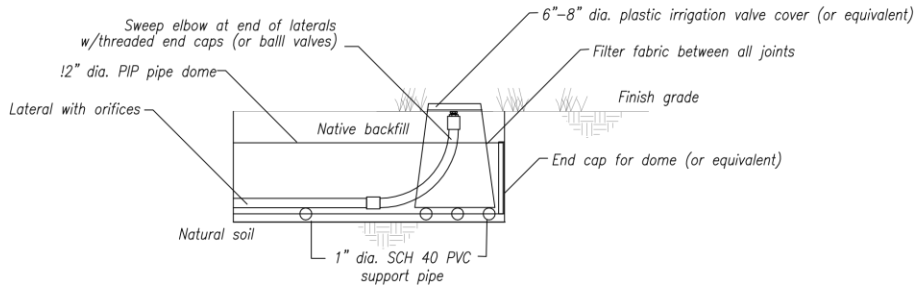

PRESSURIZED SHALLOW NARROW DRAINFIELD DETAIL

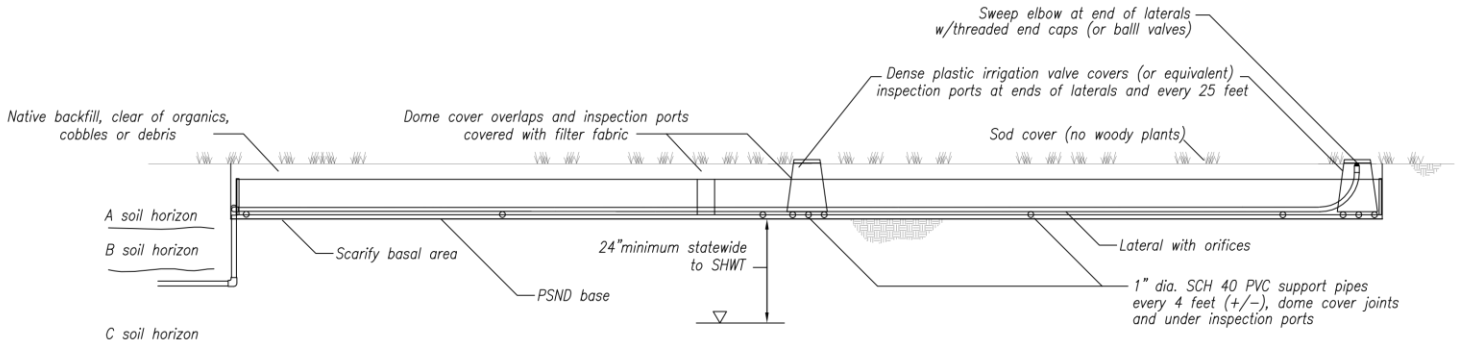

6.84 Figure 26: LPP Details for Regular Trenches (Top and Isometric Views)

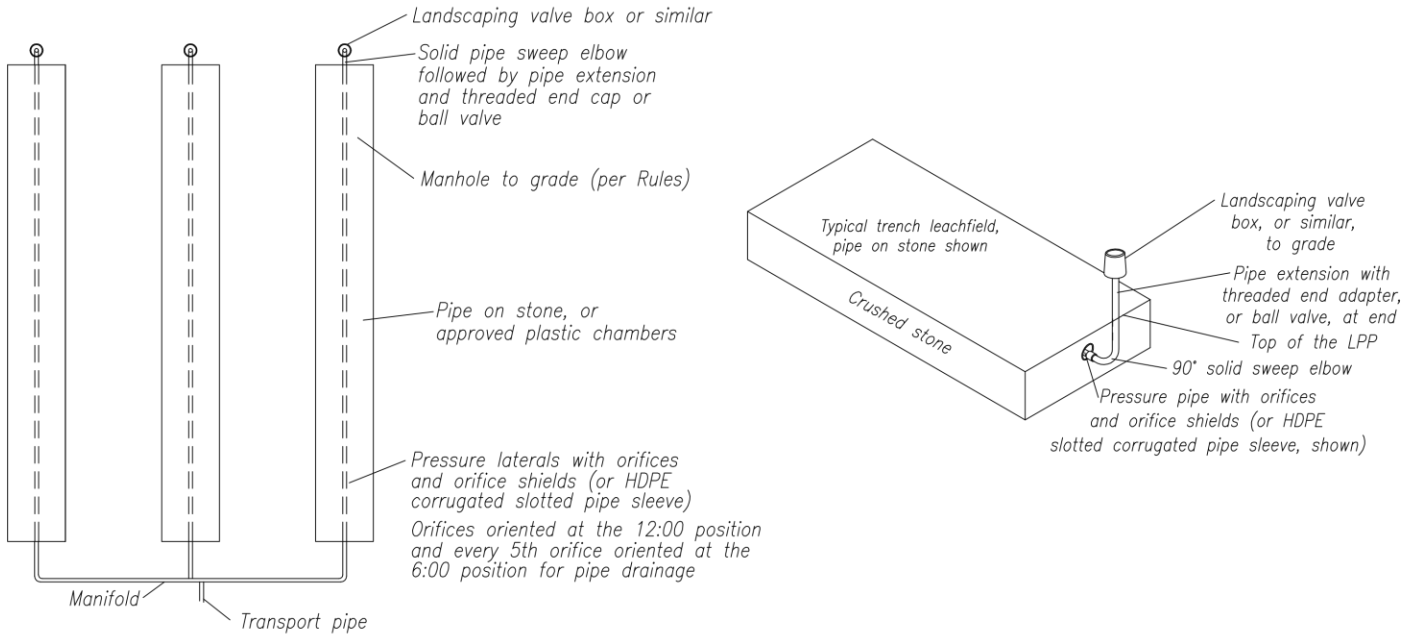

6.85 Figure 27: LPP Details for Shallow Concrete Chambers (Top and Isometric Views)

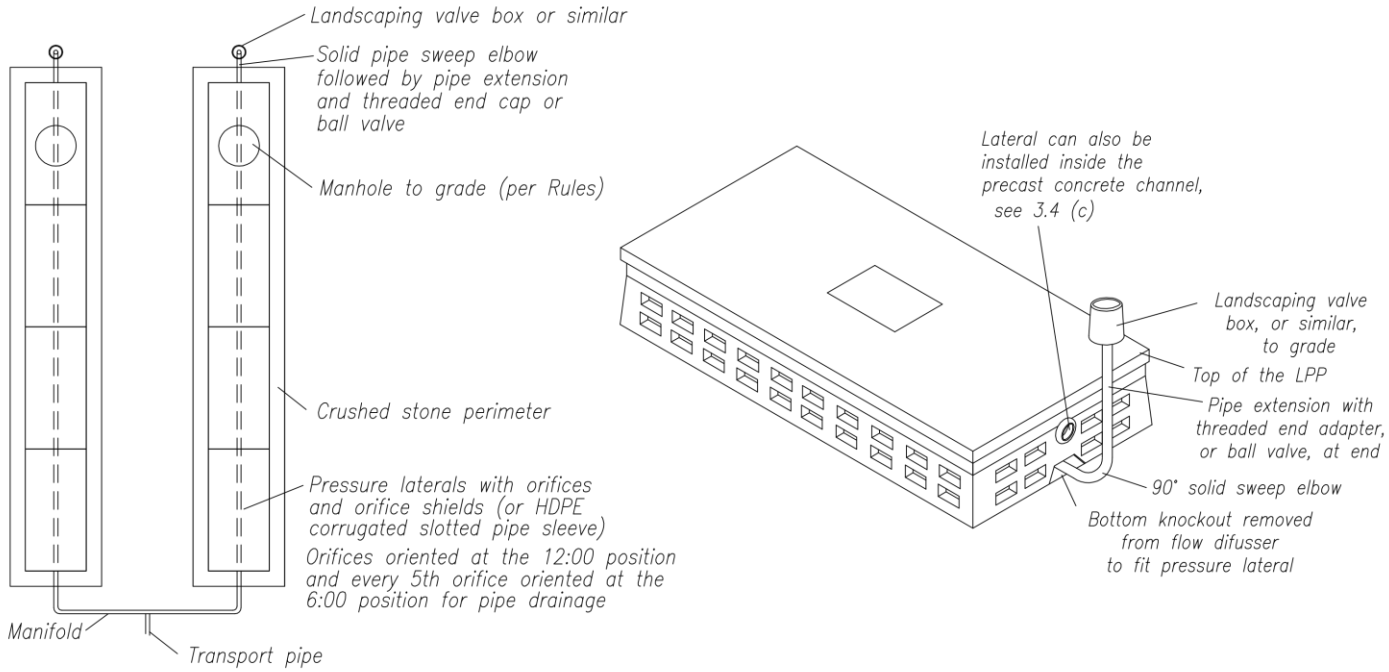

6.86 Figure 28: South Shore Salt Ponds Critical Resource Area

For a detailed look at a location, go to the DEM website, go to “Maps,” go to “Environmental Resource Maps” and build a map of your choice.

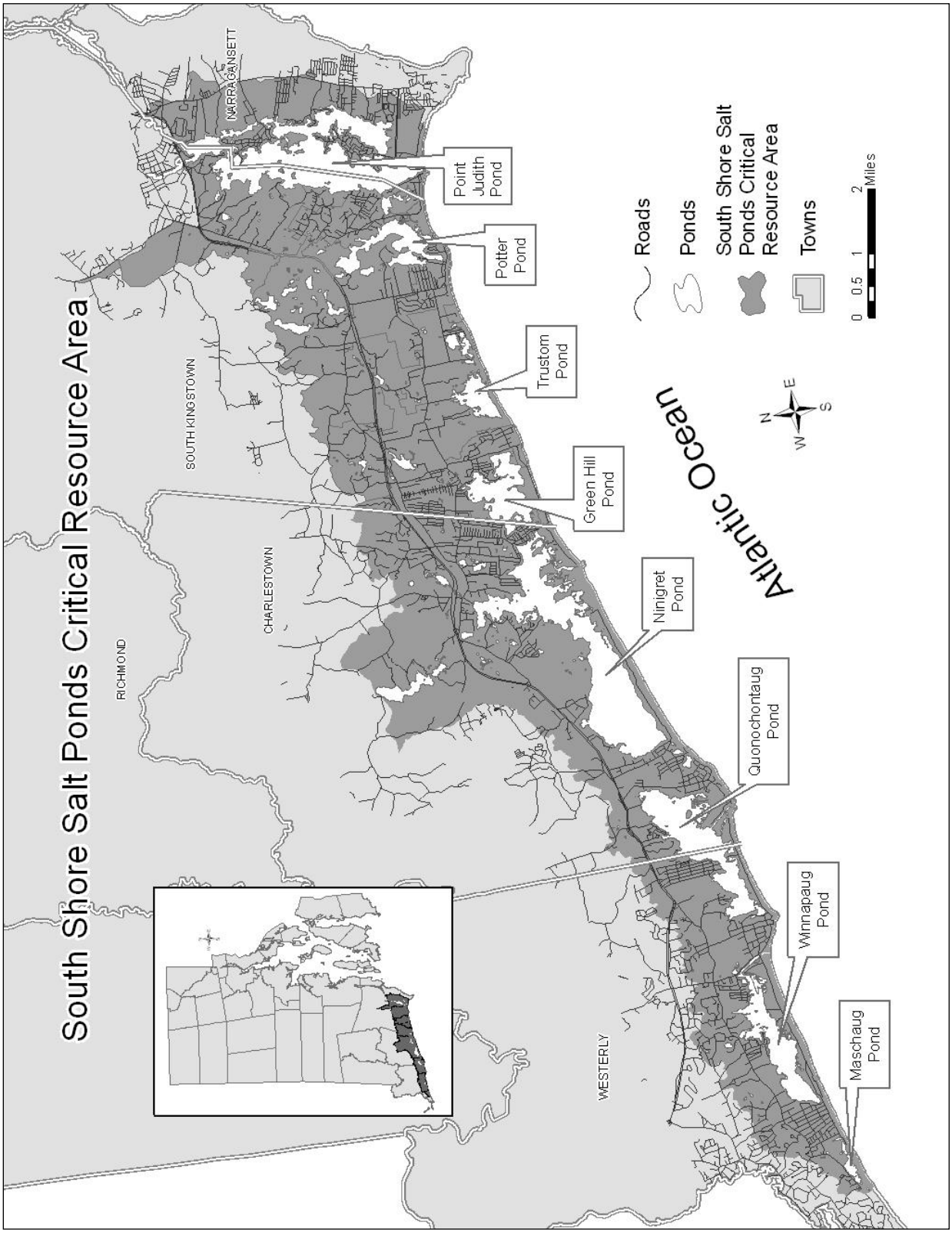

6.87 Figure 29: Narrow River Critical Resource Area

For a detailed look at a location, go to the DEM website, go to "Maps," go to "Environmental Resource Maps" and build a map of your choice.

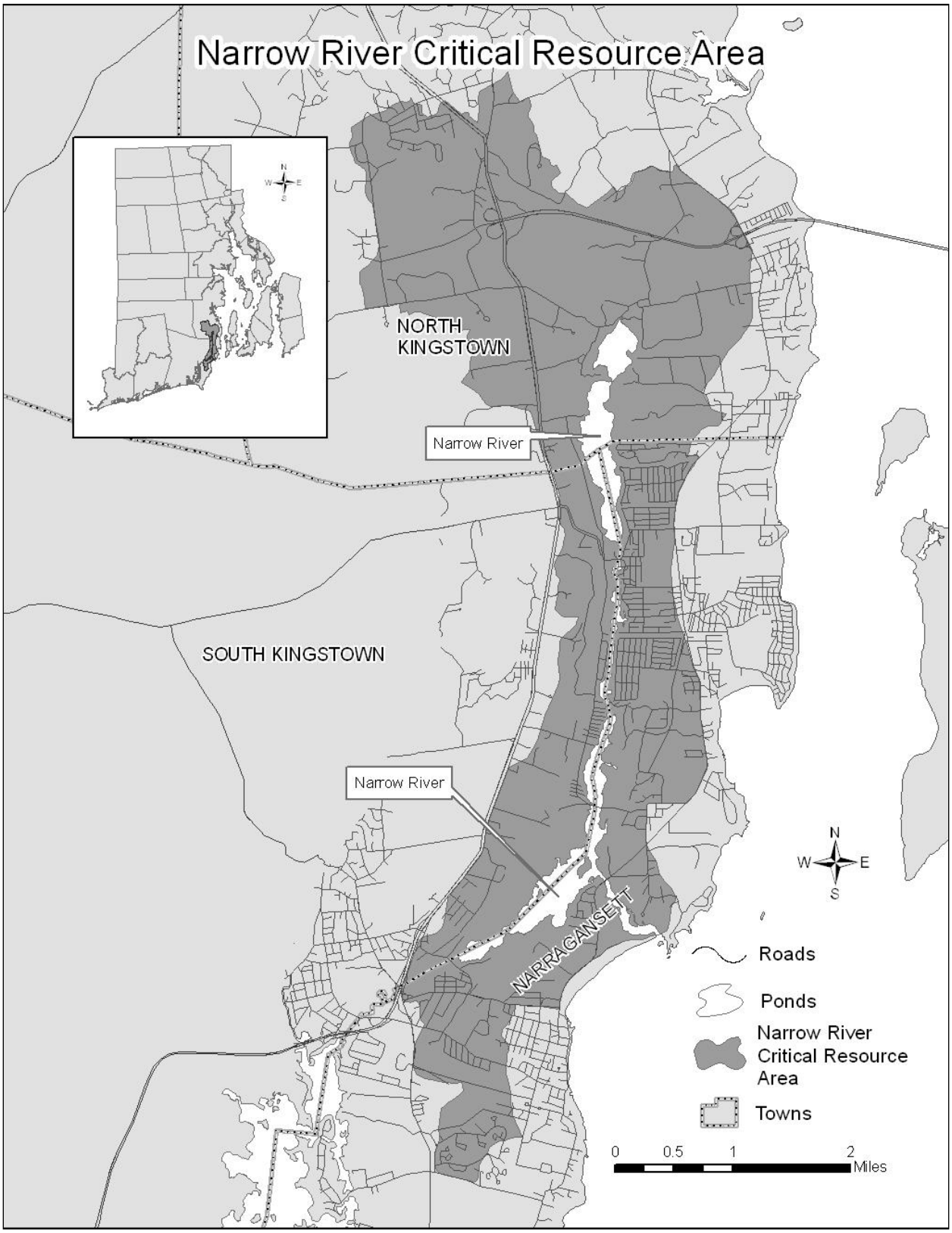

6.88 Figure 30: Providence Water Supply Board Drinking Water Supply Watershed

For a detailed look at a location, go to the DEM website, go to “Maps,” go to “Environmental Resource Maps” and build a map of your choice.

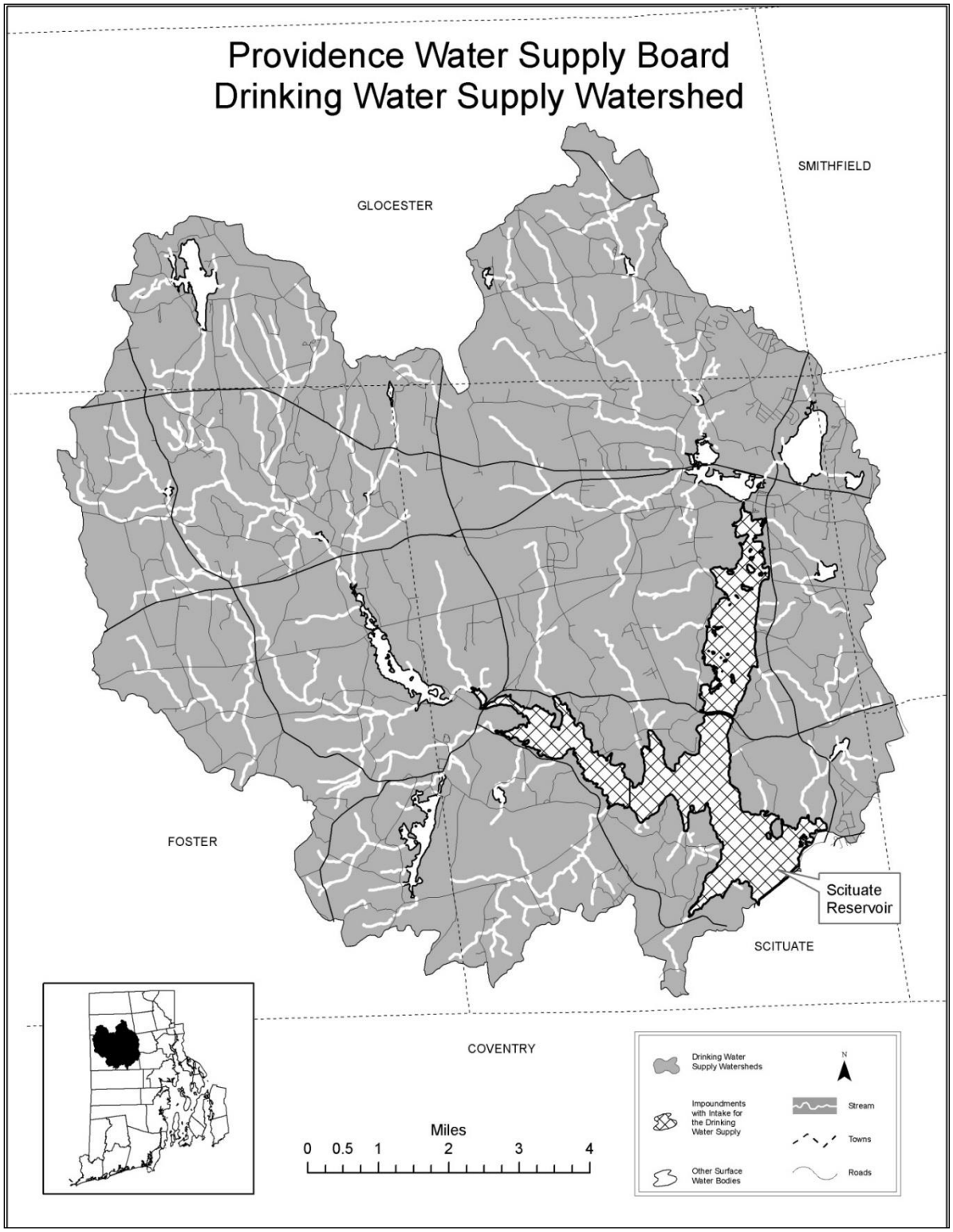

6.89 Figure 31: Cumberland, Pawtucket Water Supply Board and Woonsocket Drinking Water Supply Watersheds

For a detailed look at a location, go to the DEM website, go to "Maps," go to "Environmental Resource Maps" and build a map of your choice.

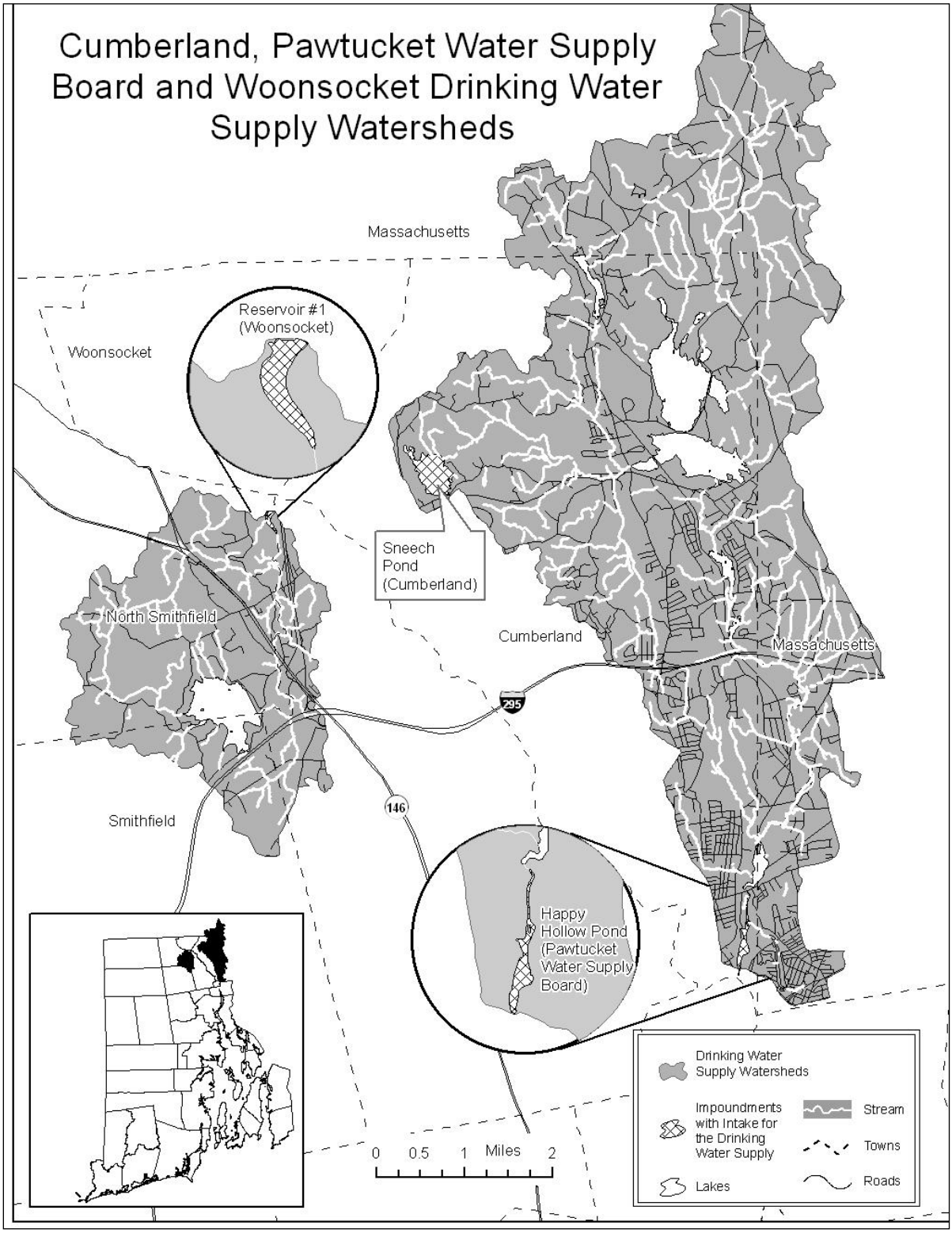

6.90 Figure 32: Newport, New Shoreham and Stone Bridge Fire District Drinking Water Supply Watersheds

For a detailed look at a location, go to the DEM website, go to "Maps," go to "Environmental Resource Maps" and build a map of your choice.

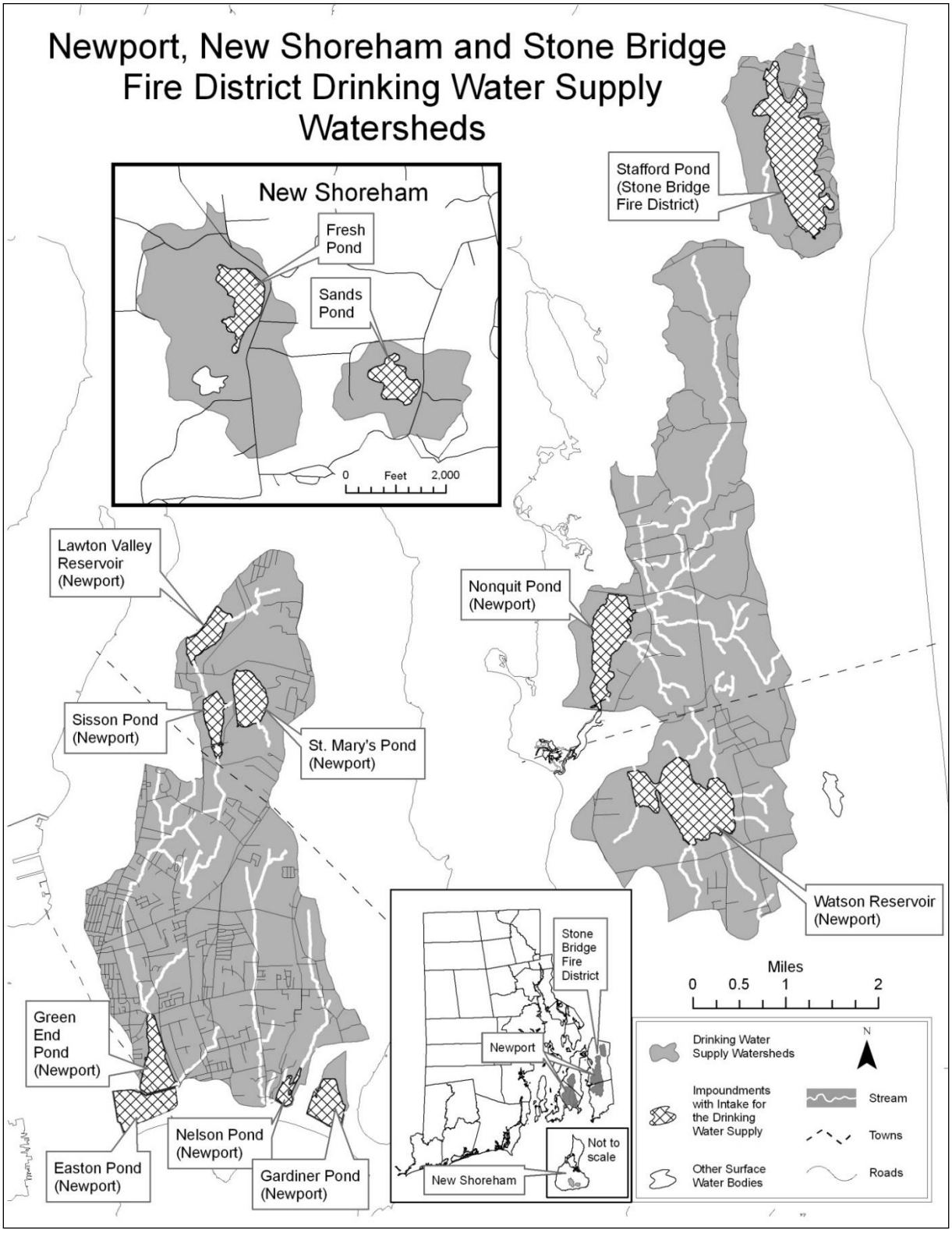

6.91 Figure 33: Eleanor Slater/Zambarano Unit, Bristol County Water Authority, Yawgoog Scout Reservation, and Jamestown Drinking Water Supply Watersheds
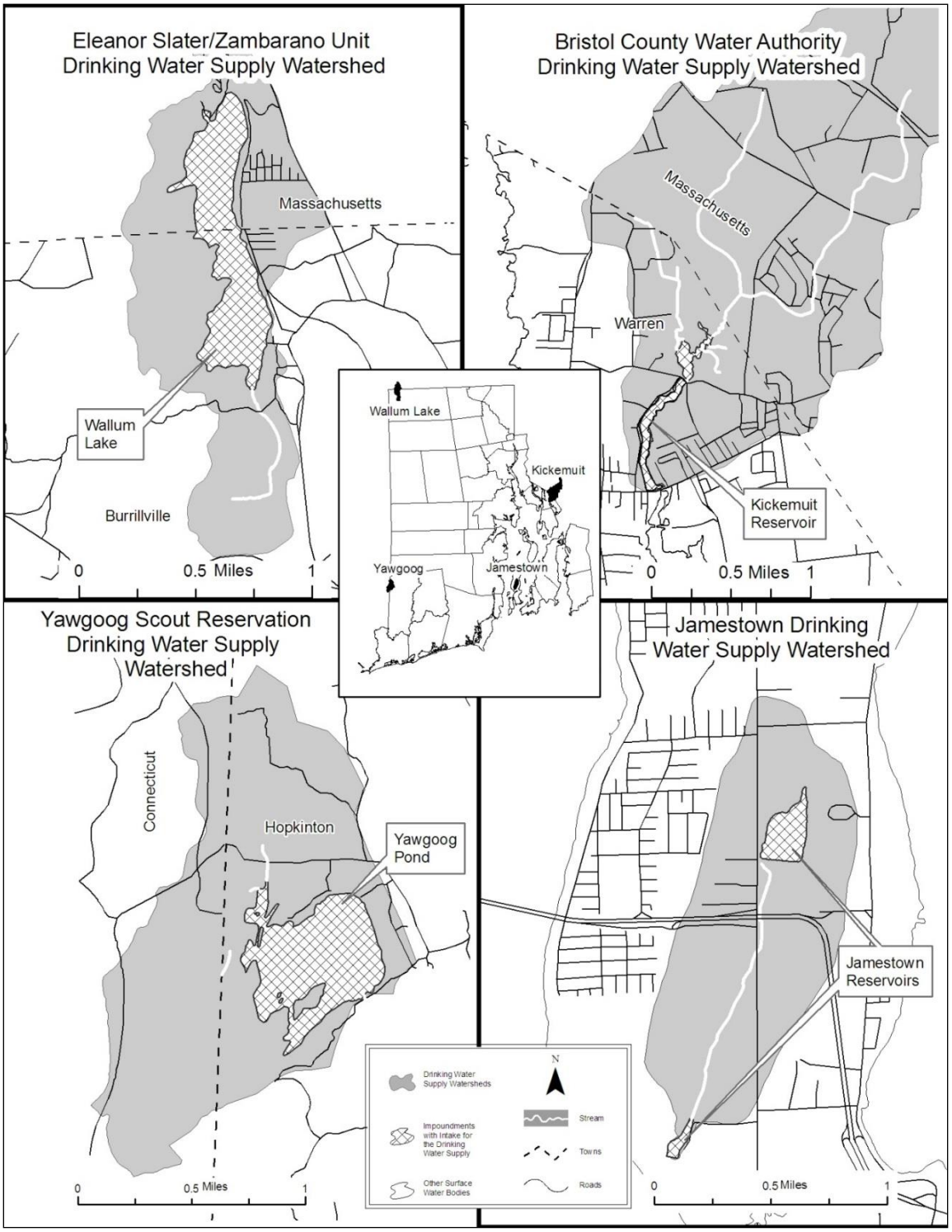
For a detailed look at a location, go to the DEM website, go to "Maps," go to "Environmental Resource Maps" and build a map of your choice.